Comprehensive Energy Audit

Prepared for

Wayne Township School District

October 17, 2013

AMERESCO
Green • Clean • Sustainable

Prepared for the

Wayne Township Public Schools

October 17, 2013

Comprehensive Energy Audit

Presented by
Ameresco Inc.
50 Front Street
Newburgh, NY 12550
T: (845) 561.2260 • F: (845) 561.2261

This Proposal contains data and information that has been submitted in response to a request for proposal or similar solicitation and is provided in confidence. The contents include proprietary information and trade secrets that belong to Ameresco, Inc., ("Confidential Information") and is disclosed to the recipient only for purposes of evaluation. In the event Ameresco is awarded a contract or purchase order as a result of or in connection with the submission of this proposal, Customer shall have a limited right as set forth in the governing contract or purchase order to disclose the data herein, but only to the extent expressly allowed. This restriction does not limit the Customer's right to use or disclose data obtained without restriction from any source, including the proposer.

TABLE OF CONTENTS

Executive Summary

Section A: Background

Section B: Project Description

Section C: Project Results/Recommendations and General Considerations

Section D: Financial Results/Recommendations

Section E: Implementation Schedule

This page is intentionally left blank.

Executive Summary

Project Intent

Ameresco has completed the Comprehensive Energy Audit (CEA) for the Wayne Township Public School District (District). With this CEA we set forth an Energy Savings Plan (ESP) which identifies, manages and conserves energy through a variety of Energy Conservation Measures (ECM). By implementing these ECMs with Ameresco each facility within the District will become a more safe, productive and cost effective environment for the administration, staff and students. The facilities included in the CEA are:

- **A.P. Terhune Elementary School** – 40 Geoffrey Way, Wayne, NJ 07470
- **James Fallon Elementary School** – 51 Clifford Drive, Wayne NJ 07470
- **John F. Kennedy Elementary School** – 1310 Ratzer Road, Wayne, NJ 07470
- **Lafayette Elementary School** – 100 Laauwe Avenue, Wayne, NJ 07470
- **Packanack Elementary School** – 190 Oakwood Drive, Wayne, NJ 07470
- **Pines Lake Elementary School** – 811 Pines Lake Drive, Wayne, NJ 07470
- **Randall Carter Elementary School** – 531 Alps Road, Wayne, NJ 07470
- **Ryerson Elementary School** – 30 McClelland Avenue, Wayne, NJ 07470
- **Theunis dey Elementary School** – 55 Webster Drive, Wayne, NJ 07470
- **Anthony Wayne Middle School** – 201 Garside Avenue, Wayne, NJ 07470
- **George Washington Middle School** – 68 Lenox Road, Wayne, NJ 07470
- **Schuyler Colfax Middle School** – 1500 Hamburg Turnpike, Wayne, NJ 07470
- **Wayne Hills High School** – 272 Berdan Avenue, Wayne, NJ 07470
- **Wayne Valley High School** – 551 Valley Road, Wayne, NJ 07470
- **Preakness Academy** – 1006 Hamburg Turnpike, Wayne, NJ 07470
- **Board of Education** – 50 Nellis Drive, Wayne, NJ 07470

"Page content is subject to Confidentiality Restrictions"

Project Findings

The ECMs identified will reduce the energy consumption at these facilities through a combination of the installation of more efficient equipment and modifications to the operation of existing equipment. The recommendations include:

- Lighting System Improvements
- Lighting Controls
- Exterior Lighting
- Building Management System
- Steam Trap Replacement
- Pipe and Tank Insulation
- Building Envelope Improvements
- Vending Machine Controls
- Premium Efficiency Motors
- Walk-in Freezer and Cooler Controllers
- High Efficiency Transformers
- Boiler Replacements
- De-Stratification Fans
- Variable Frequency Drives
- Computer Load Management

The table below summarizes the Green House Gas reductions derived through the CEA. That information is also reported in Greenhouse Gas reduction equivalents.

Project Green House Gas Reductions	
Estimated Emission Reductions	
CO_2 in pounds	**5,751,412**
NO_x in pounds	**9,138**
SO_2 in pounds	**8,295**
Green House Gas Equivalents	
Automobiles taken off the road	**543**
Gallons of gasoline not burned	**292,466**
Acres of pine forests sequestering carbon	**2,138**

"Page content is subject to Confidentiality Restrictions"

The table below identifies the source of the savings identified during the CEA.

	ECM Name	Total kW	Electricity (kWhrs)	Nat Gas (Therms)	Total Project Savings ($)	Installed Costs ($)	SPB (Years)
1	Lighting Systems	8,476	2,210,243	(31,542)	$284,470	$3,027,412	10.64
2	Lighting Controls		454,743	(6,497)	46,843	46,843	11.92
3	Exterior Lighting		222,899		25,653	380,859	14.85
4	Building Management Sys		634,653	211,578	241,332	2,752,324	11.40
5	Steam Trap Replacements			14,782	12,090	102,200	8.45
6	Pipe & Tank Insulation			1,827	1,504	23,959	15.93
7	Building Envelope Impts		3,597	31,406	25,605	273,328	10.67
8	Vending Machine Controls		42,643	(745)	4,197	10,804	2.57
9	Premium Motors	98	37,836		4,384	48,972	11.17
10	Walk-in Cooler Controls		38,504		4,282	12,638	2.95
11	High Efficiency Transformers	212	165,197		20,224	222,936	11.02
12	Boiler Replacements			22,998	18,840	2,628,121	139.49
13	De-stratification Fans	(19)	(3,971)		10,388	87,750	8.45
14	Variable Frequency Drives		15,505		1,572	35,849	22.81
15	Computer Load Management		144,772	(2,288)	14,635	69,882	4.77
	Totals	8,767	3,966,620	255,190	$716,019	$10,235,462	14.29

"Page content is subject to Confidentiality Restrictions"

Financial Terms

Financial Terms	
Financing Term (years)	15
Savings Guarantee Period (years)	15
Capital Investment	$10,235,462
Energy Cost Escalation (Annually)	2.3%
Initial Annual Project Savings	$704,905

This CEA presents an extremely beneficial economic scenario to the District. Ameresco has maximized the net economic benefit to the District by optimizing the level of guaranteed savings. The financial terms of the Energy Savings Plan advanced by Ameresco are displayed in the table above. Additional information on the financial terms of the project is provided in Section D of the Comprehensive Energy Audit Report.

A 2.2% escalation of electricity energy prices and a 2.4% escalation of natural gas prices, each from the base year period, are included in the CEA calculations. A full fifteen years of guaranteed savings and performance period verification services during the first three (3) years have been provided to the District. Additional information on the specific services included is provided in Section C and Section E of the Comprehensive Energy Audit Report.

The project ECMs, in aggregate, are completely self-funding through the energy savings over a 15 year project term. The New Jersey Board of Public Utility "Pay for Performance" (P4P) rebates for the project are estimated to be $1,196,541. The actual payments to the District of these rebates will be subsequent to the completion of the construction.

Ameresco has the financial resources to successfully fulfill our obligations on this contract, from project inception through construction completion and commissioning. There are no time limits or financial caps on our corporate bonding. Funding of all aspects of this proposal will be realized through guaranteed energy cost savings. There will be no upfront capital investment required from the District.

Implementation

Ameresco has the ability to physically accomplish all of the varied aspects required to implement a performance contract of this project's scope and duration. The capabilities of our local offices in Newburgh, NY and Red Bank, NJ as well as other regional staff associated with the District's project, are unsurpassed in carrying out the tasks involved, with absolutely no disruption to the District, its students, faculty or staff.

Ameresco will begin mobilization immediately upon approval of the District's BOE and the BPU. Design and Engineering will proceed, followed by public bidding and procurement. Construction will commence after bidding and subsequent approval by the New Jersey Department of Education.

"Page content is subject to Confidentiality Restrictions"

Changes from Proposal Phase of Project

The Proposal submitted in March of 2013 was based on a BPU Local Government Energy Audits (LGEA) performed in 2011 using utility data from the fiscal year ending in June 2011. The CEA is based on average utility data for the period ending June 2013. Natural gas prices plummeted by 50% to $.49 per therm. This impacted the ability to include more thermal energy ECMs. The table below presents an overall summary of the changes incorporated in the CEA based on conversations with, and directions received from the District.

Improvements	Proposal March 2013		Comprehensive Audit October 2013		Cost Change	Comments:
	Costs	Savings	Cost	Savings		
Lighting Systems	$ 1,646,366	$ 197,275	$ 3,027,412	$ 284,470	84%	RLRB in Proposal, new in CEA
Lighting Controls	$ 111,134	$ 25,655	$ 558,428	$ 46,843	402%	500 cfs in Proposal, 2,100 in CEA
Exterior Lighting	$ 137,440	$ 10,867	$ 380,859	$ 25,653	177%	200 in Proposal, 433 in CEA
Building Management System	$ 1,319,413	$ 270,672	$ 2,752,324	$ 241,332	109%	Entire system to be open protocal
Steam Trap Replacement	$ 91,495	$ 6,513	$ 102,200	$ 12,090	12%	Basically the same scope of work
Pipe and Tank Insulation	$ 16,216	$ 1,150	$ 23,959	$ 1,504	48%	Basically the same scope of work
Building Envelope Improvements	$ 717,578	$ 28,478	$ 273,328	$ 25,605	-62%	Good payback areas only
Vending Machine Controls	$ 11,039	$ 4,807	$ 10,804	$ 4,197	-2%	Basically the same scope of work
Computer Load Management	$ 58,276	$ 65,759	$ 69,882	$ 14,635	20%	District has Faronics Deep Freeze
Green Print Management	$ 118,726	$ 33,021	$ -	$ -	-100%	Removed by District
Premium Efficiency Motors	$ 266,790	$ 14,190	$ 48,972	$ 4,384	-82%	Scope reduced to 25 from 125
Walk in Freezer and Cooler Controls	$ 11,489	$ 5,754	$ 12,638	$ 4,282	10%	Basically the same scope of work
High Efficiency Transformers	$ 331,485	$ 29,083	$ 222,936	$ 20,224	-33%	Scope reduced to 24 from 35 units
Boiler Replacements	$ 3,720,711	$ 43,662	$ 2,628,121	$ 18,840	-29%	Reduced to 13 from 20 due to rate
De-Stratification Fans	$ 255,286	$ 18,093	$ 87,750	$ 10,388	-66%	Reduced to 35 from 83 due to cost
Variable Frequency Drives	$ 67,403	$ 5,019	$ 35,849	$ 1,572	-47%	Reduces to 3 from 7 due to cost
Roof Top Unit Replacements	$ 133,553	$ 3,452	$ -	$ -	-100%	Swapped for more boilers
Totals	$ 9,014,400	$ 763,450	$ 10,235,462	$ 716,019		

This page is intentionally left blank.

Section A: Background

Facility Description

The Wayne Township School District is located in Passaic County, New Jersey. The District consists of (14) school buildings, an Administration Building and the Preakness Library. The two High Schools and three Middle Schools, (854,350 sq. ft.total), are each utilized most of the year with summer sessions, sports programs and evening activities. The buildings are closed for approximately six weeks annually for holidays and a short summer break. The nine remaining elementary schools (419,000 sq. ft.total), are each occupied over the course of nine months annually. These buildings are closed for approximately 12 weeks each year for holidays and vacations. The District Administration Building and Preakness Library are utilized year round..

Table 1 below provides information gathered from site investigations and from information provided by the District. Along with each building's performance, square footage, and space type description.

Table 1: Site Energy Use Index baseline period July 2012 to June 2013

Facility Name	Gross Square Feet	Facility Description	Electric kWh/g.s.f	Thermal Fuel mBtu/g.s.f	Total EUI mBtu/g.s.f
Randall Carter-Elementary School	40,148	Classrooms	6.2	93.3	114.4
Theunis Dey-Elementary School	46,579	Classrooms	5.6	48.3	67.2
James Fallon-Elementary School	46,428	Classrooms	9.3	52.2	83.9
John F. Kennedy-Elementary School	44,305	Classrooms	8.6	51.4	80.8
Lafayette-Elementary School	46,480	Classrooms	10.6	85.9	122.1
Packanack-Elementary School	51,762	Classrooms	5.6	90.0	109.2
Pines Lake-Elementary School	48,195	Classrooms	13.3	69.8	115.1
Ryerson-Elementary School	48,634	Classrooms	7.0	66.0	90.0
Albert Payson Terhune-Elementary School	46,470	Classrooms	6.6	37.2	59.7
Anthony Wayne-Middle School	108,813	Classrooms	19.1	71.4	136.6
Schuyler-Colfax-Middle School	116,894	Classrooms	11.2	58.8	97.2
George Washington-Middle School	106,488	Classrooms	9.1	61.3	92.2
Wayne Hills-High School	253,766	Classrooms	10.0	54.4	88.7
Wayne Valley-High School	268,389	Classrooms	7.2	38.2	62.9
Preakness (Library Community Center)	28,855	Office Community Space	7.9	97.0	123.9
Board of Ed Administration	18,921	Offices	21.3	61.6	134.3
Total	1,321,127		9.7	57.9	91.0

"Page content is subject to Confidentiality Restrictions"

Energy performance is the ratio of yearly energy use by square footage and is a good indicator of how well a building performs. The energy performance of each building was calculated from the utility information provided by the District Facilities Department. Fuel performance includes space heating, domestic hot water production and cooking loads and is calculated in mBtu/gsf (1 mBTU =1000 BTUs), while electrical performance includes all electric usage such as lighting, computers, and HVAC equipment and is calculated in kWh/gsf. The performance of the District shows that the most of the buildings are consuming more energy on an mBTU/gsf and kWh/gsf basis than typical K-12 school district in this climate region.

Baseline Information

Electricity is delivered by PSE&G for all schools but Pines Lake Elementary School which has it electricity delivered by JCP&L. The electric commodity is procured by a third party cooperative or the Alliance for Competitive Energy Services (ACES). Natural gas is delivered to each facility by PSE&G. The natural gas commodity is also by the ACES contracts. The ACES contracts are currently up for renewal in May 2015 and these contracts general are short term. The typically term lengths are 1 to 3 years with three years being generally the maximum contract length. The current contract is 24 months. For annual energy usage of the buildings, please see the Table 2:

Table 2 Baseline Energy Use

Facility Name	Primary Fuel	Natural Gas (Therms)	Electric Demand Annual (kW)	Electric Energy Usage (kWh)
Randall Carter-Elementary School	Natural Gas	37,453	833.7	248,895
Theunis Dey-Elementary School	Natural Gas	22,487	713.5	258,823
James Fallon-Elementary School	Natural Gas	24,219	1,640.0	431,200
John F. Kennedy-Elementary School	Natural Gas	22,760	967.2	381,570
Lafayette-Elementary School	Natural Gas	39,911	1,110.5	493,432
Packanack-Elementary School	Natural Gas	46,582	646.9	291,008
Pines Lake-Elementary School	Natural Gas	33,624	618.7	639,520
Ryerson-Elementary School	Natural Gas	32,090	1,275.0	342,180
Albert Payson Terhune-Elementary School	Natural Gas	17,281	910.6	306,653
Anthony Wayne-Middle School	Natural Gas	77,696	5,601.4	2,079,969
Schuyler-Colfax-Middle School	Natural Gas	68,778	2,840.2	1,312,700
George Washington-Middle School	Natural Gas	65,263	3,352.2	964,439
Wayne Hills-High School	Natural Gas	138,109	6,072.6	2,549,020
Wayne Valley-High School	Natural Gas	102,398	6,725.8	1,944,729
Preakness (Library Community Center)	Natural Gas	28,000	1,112.4	227,030
Board of Ed Administration	Natural Gas	11,658	1,228.8	402,990
Total		768,309	35,649.5	12,874,158

The baseline period is based on fiscal years 2013 (July 2012 – June 2013) utility bills provided by the District. The average baseline occupancy and heating system hours for each location are shown in Table 3.

Table 3 Average occupancy and heating hours		
	Existing Heating Hours	Existing Occupancy Hours
Randall Carter-Elementary School	3,476	1,760
Theunis Dey-Elementary School	2,151	1,760
James Fallon-Elementary School	2,346	1,760
John F. Kennedy-Elementary School	2,346	1,760
Lafayette-Elementary School	2,249	1,955
Packanack-Elementary School	2,346	1,760
Pines Lake-Elementary School	2,346	1,760
Ryerson-Elementary School	2,738	2,053
Albert Payson Terhune-Elementary School	2,151	1,760
Anthony Wayne-Middle School	5,214	4,345
Schuyler-Colfax-Middle School	3,215	2,781
George Washington-Middle School	3,824	3,824
Wayne Hills-High School	5,353	4,875
Wayne Valley-High School	4,302	4,302
Preakness (Library Community Center)	2,451	1,929
Board of Ed Administration	4,119	3,598

Table 4.1 and 4.2 show the 3 year historical average energy prices for both electric and natural gas utility. For the purposes of calculating the energy cost savings Ameresco utilized and average energy cost for the past three Fiscal Years. Due to the recent volatility in the natural gas and electric markets it was determined that a three year average was a more representative energy rate to utilize for energy cost savings calculation.

Table 4.1 Electric Energy Rates	FY 2011	FY2012	FY2013	Average	Demand Rate
Facility	$/kWh	$/kWh	$/kWh	$/kWh	$/kW
Randall Carter-Elementary School	$0.1018	$0.1227	$0.1436	$0.1234	$4.24
Theunis Dey-Elementary School	$0.1019	$0.1235	$0.1450	$0.1242	$4.24
James Fallon-Elementary School	$0.0995	$0.1340	$0.1686	$0.1352	$4.12
John F. Kennedy-Elementary School	$0.1181	$0.1203	$0.1225	$0.1215	$4.24
Lafayette-Elementary School	$0.1081	$0.1209	$0.1338	$0.1215	$4.24
Packanack-Elementary School	$0.1022	$0.1281	$0.1540	$0.1151	$4.24
Pines Lake-Elementary School	$0.1010	$0.0872	$0.0734	$0.1152	$4.24
Ryerson-Elementary School	$0.1019	$0.1201	$0.1384	$0.1204	$4.24
Albert Payson Terhune-Elementary School	$0.1023	$0.1146	$0.1269	$0.1151	$3.99
Anthony Wayne-Middle School	$0.0991	$0.1069	$0.1146	$0.1080	$3.49
Schuyler-Colfax-Middle School	$0.0973	$0.1007	$0.1041	$0.1014	$3.37
George Washington-Middle School	$0.1019	$0.1213	$0.1407	$0.1213	$3.49
Wayne Hills-High School	$0.0783	$0.0836	$0.0889	$0.1029	$4.24
Wayne Valley-High School	$0.1072	$0.1180	$0.1287	$0.1183	$3.49
Preakness (Library Community Center)	$0.0910	$0.0931	$0.0951	$0.0934	$4.24
Board of Ed Administration	$0.1001	$0.1178	$0.1355	$0.1174	$3.85

"Page content is subject to Confidentiality Restrictions"

Table 4.2 Natural Gas Energy Rates	FY 2011	FY2012	FY2013	Average
Facility	$/therm	$/therm	$/therm	$/therm
Randall Carter-Elementary School	$0.962	$0.935	$0.488	$0.775
Theunis Dey-Elementary School	$0.905	$0.915	$0.516	$0.683
James Fallon-Elementary School	$0.990	$0.995	$0.520	$0.686
John F. Kennedy-Elementary School	$0.970	$1.009	$0.521	$0.829
Lafayette-Elementary School	$0.954	$0.956	$0.494	$0.793
Packanack-Elementary School	$1.055	$1.110	$0.523	$0.847
Pines Lake-Elementary School	$0.999	$1.099	$0.501	$0.813
Ryerson-Elementary School	$0.958	$0.969	$0.515	$0.808
Albert Payson Terhune-Elementary School	$1.005	$1.048	$0.547	$0.866
Anthony Wayne-Middle School	$0.874	$0.901	$0.348	$0.707
Schuyler-Colfax-Middle School	$0.994	$1.050	$0.655	$0.889
George Washington-Middle School	$0.924	$1.001	$0.443	$0.736
Wayne Hills-High School	$0.928	$1.149	$0.495	$0.860
Wayne Valley-High School	$0.938	$0.597	$0.220	$0.845
Preakness (Library Community Center)	$0.977	$0.848	$0.641	$0.823
Board of Ed Administration	$0.999	$1.139	$0.557	$0.768

Under the PSE&G and JCP&L Electric utility Tariff there is no on peak or off peak periods at any of the facilities at the Wayne Township School District.

Section B:
Project Description

Ameresco audited the facilities at Wayne Township School District (District) for energy consumption in an effort to better understand the facilities' baseline energy and other utility consumption. From the baseline energy consumption, Ameresco proposes specific energy conservation measures (ECMs) to be implemented through a self-funded energy services agreement (ESA). ECMs will be implemented in such a way as to maximize the overall benefit to the District.

A description of the improvements to the existing systems for each proposed ECM can be found in the Project Results section.

ECM 1: Lighting System Improvements

Lighting System Improvements will feature new, super-efficient T8 lamps operating on electronic ballasts, which will improve the overall color, quality, and consistency of the lighting. Also included in this measure are conversions of incandescent and HID to compact fluorescent and LED lamps. Linear LED fixtures will be installed in all school Gymnasiums. This measure will maintain or improve light levels so no adverse impact will be experienced by students, visitors and staff. Automatic lighting controls will be installed as wall or ceiling mounted occupancy sensors. Each control will be appropriate to each particular area that contains two or more controllable fixtures, with intermittent occupancy and where a safety hazard will not be created if the sensor inadvertently turns the lights off.

ECM 2: Lighting Controls

Automatic Lighting Controls will be installed as wall or ceiling mounted occupancy sensors. Each control will be appropriate to each particular area that contains two or more controllable fixtures, with intermittent occupancy and where a safety hazard will not be created if the sensor inadvertently turns the lights off.

"Page content is subject to Confidentiality Restrictions"

ECM 3: Exterior Lighting Improvements

Ameresco designed a lighting system that will benefit the students, faculty, and staff of Wayne Township School District (District). Our project replaces or upgrades many of the existing exterior fixtures, and enhancing the quality, consistency, and color rendering of your outside lighting, while meeting all applicable codes and standards. This measure will maintain or improve light levels so no adverse impact will be experienced by students, visitors and staff.

ECM 4: Integrated and New Energy Management System

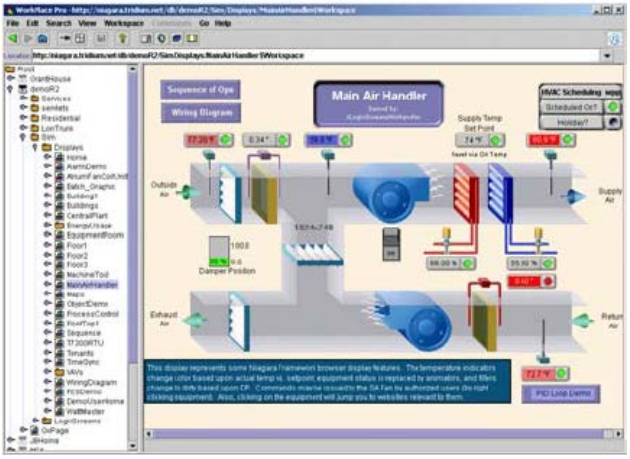

Ameresco proposes to install new DDC controls and expand upon the existing Energy Management System (EMS) at all schools in the Wayne Township Public School District (District). The proposed EMSs will be "open protocol" based on the Niagara Tridium platform and BACnet communication protocol. The new system will be "interoperable" with other BACnet products. This feature will allow products from most vendor to be installed as the system is maintained or expanded in the future. The proposed EMSs will control most of the existing pneumatic control system at each building and tie into existing digital control system. The proposed EMS will be accessible from any internet-enabled personal computer with web browsing software. This new EMS will provide reduced energy consumption, increase system reliability and improve occupant comfort for all District facilities listed to receive a new EMS.

ECM 5: Steam Trap Replacements

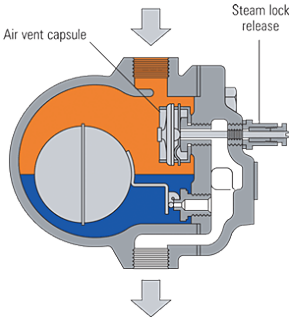

Ameresco surveyed of the Wayne Township Public Schools District's (District) steam traps and proposes to replace existing F&T steam trap internals and install new drop in inserts for existing thermostatic traps throughout the District's multiple distribution systems to improve the overall steam use and heating system efficiency. Steam distribution is accomplished at low pressure throughout the buildings that employ steam, currently with significant thermal energy waste due to failing traps. Properly functioning steam traps pass air and drain condensate formed in the steam distribution systems and prevent live steam from exiting. This measure addresses 358 existing steam traps. The improvement will result in energy and maintenance cost savings for the school district

ECM 6: Pipe and tank Insulation

Ameresco proposes to insulate existing un-insulated hot water, steam and condensate piping in boiler rooms, mechanical spaces and basement or crawl spaces. In addition, Ameresco proposes to insulate existing un-insulated feed and condensate tanks. Installing proper insulation to piping and tanks will improve the overall efficiency of each system and alleviate over heating due to heat loss from exposed piping. Cost savings from the reduction of fossil fuel usage will result from the implementation of this measure.

ECM 7: Building Envelope Improvements

The infiltration of outside air and the leaking of conditioned air will be greatly reduced by air sealing windows, doors, wall penetrations, roof penetrations, soffits and accessible and appropriate pipe/conduit connections. A comprehensive air sealing project of all areas where air infiltration is currently experienced will be address as part of this ECM. The reduction of infiltration not only improves energy consumption it reduces moisture infiltration to minimize mold growth potential and dirt and insect infiltration. The reduction of outdoor air infiltrating occupied conditioned space will improve occupant comfort and will reduce heating and cooling costs.

ECM 8: Vending Machine Controls

Ameresco will install 27 occupancy sensing plug load controllers to reduce the unnecessary operation of Wayne Public School District's (District) vending machines during unoccupied periods. The vending machine controllers will save energy used by the refrigerated drink machines (except perishable) and un-refrigerated snack vending machines during unoccupied hours without compromising product quality. The controllers will use an occupancy sensor to detect when the space is unoccupied and turn the vending machines off during prolonged periods of un-occupancy.

ECM 9: Premium Efficiency Motors

Ameresco proposes to replace 25 existing standard efficiency motors, identified during the on-site survey with premium efficiency equivalents. Motors of at least three horsepower in size that have significant annual usage were considered for replacement. The new motors will contribute to a reduction in electricity use and electrical demand. In addition to reduced energy consumption the new motors will provide a necessary upgrade to HVAC system components.

ECM 10: Walk-in Freezer/Cooler Controllers

Ameresco proposes to install evaporator fan controllers and new motors on each of the walk-in cooler evaporators at George Washington Middle School, Schuyler Colfax Middle School, Anthony Wayne Middle School, Wayne Hills High School, and Wayne Valley High School. The Frigitek® controller functions by sensing the operational status of the cooling system, and controlling the speed of the evaporator fans.

ECM 11: High Efficiency Transformers

Ameresco proposes to replace twenty four existing step-down transformers with a new energy-efficient transformer , the transformers are located at Terhune ES, Fallon ES, Kennedy ES, Lafayette ES, Pines Lake ES, Ryerson ES, Dey ES, Anthony Wayne MS, Wayne Hills HS and Wayne Valley HS. The transformers identified are a dry-type indoor transformer that step-down 480 volt Delta power to 208Y/120 volt power. Ameresco proposes to replace these transformers with a new premium efficiency unit that will reduce the electric losses and lower the cooling load in the equipment room.

ECM 12: Boiler and Burner Replacement

Ameresco proposes to replace 13 existing hot water boilers located at the following schools, Dye ES, Kennedy ES, Ryerson ES, Terhune ES, Washington MS, and Wayne Hills HS with thirteen new condensing boilers to provide the Wayne Public School District (District) with new equipment and redundancy that will save energy and lower operating and maintenance costs. The higher efficiency condensing boilers will provide the District with new equipment to save energy, lower operating and maintenance costs, and provide an offset of future capital expenditures. The existing boilers are all in excess of 40 years old and well beyond its normal life of 30 years.

ECM 13: Destratification Fans

Ameresco proposes to install Zoo thermal equalizing fans or equivalent. The thermal equalizing fans will more effectively distribute the heating energy in high ceiling applications. In a large gymnasium or cafetoriums with a high ceiling the heat rises to the ceiling and cooler air settles at the floor. Most gymnasiums have roof or ceiling mounted HVAC equipment and the majority of the conditioned air never reaches the floor, resulting in uncomfortable conditions for space occupants. In addition, poor mixing of the conditioned space air results in significant overheating of the space. Space temperature sensors are located on the walls near the floor and to satisfy the space temperature requirements the ceiling area must be significantly overheated resulting in higher energy consumption and costs. Thermal equalizing fans will provide significantly improved mixing of the air and result in less energy consumed to heat a given space and provide improved occupant comfort.

ECM 14: Variable Frequency Drives

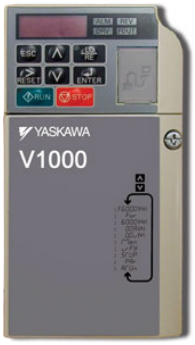

Ameresco proposes to install Variable Frequency Drives (VFDs) on the existing constant volume pumps in order to balance the water flow distribution system at the Schuyler Coalfax Middle School. Installing Variable Frequency Drives (VFDs) for these pumps will allow them to maintain pump reduced preset speed thereby reducing pump electrical consumption. Motor horsepower varies roughly at the cube of motor speed – thus a motor operating at 50% of its rated speed uses approximately 12.5% of its rated horsepower. Lower water flows can be delivered by lowering the pump motor speed thereby lowering the pump motor power consumption.

ECM 15: Computer Load Management

A new computer load management system will be installed to provide measurement, management and reduction of energy use by the District's wide area network of personal computers. This software will save energy consumed by computers during unoccupied periods. The software is fully configurable by Information Technology (IT) personnel and provides a means to schedule software updates as well as to reduce energy and power consumption. The software detects user presence by tracking inputs such as mouse movement or use of the keyboard. During unoccupied periods, the software resets parameters to reduce lower power consumption after a period of time specified by IT.

"Page content is subject to Confidentiality Restrictions"

This page is intentionally left blank.

AMERESCO
Green • Clean • Sustainable

Measure Matrix

Facility	1 Lighting System Improvements	2 Lighting Controls	3 Exterior Lighting	4 Energy Management Systems	5 Steam Trap Replacements	6 Pipe &Tank Insulations	7 Building Envelope Improvements	8 Vending Machine Controls	9 Premium Efficiency Motors	10 Walk-in Freezer/Cooler Controllers	11 High Efficiency Transformers	12 Replace Boilers	13 Destratification Fans	14 Variable Frequency Drives	15 Computer Load Management
Randall Carter	X	X	X	X	X	X	X	X							X
Theunis Dey	X	X	X	X			X				X	X			X
James Fallon	X	X	X	X			X	X			X				X
John F. Kennedy	X	X	X	X			X				X	X			X
Lafayette	X	X	X	X	X	X	X	X			X		X		X
Packanack	X	X	X	X	X	X	X	X							X
Pines Lake	X	X	X	X	X	X	X				X				X
Ryerson	X	X	X	X			X				X	X	X		X
Albert Payson Terhune	X	X	X	X			X				X	X			X
Anthony Wayne	X	X	X	X			X	X		X	X		X		X
Schuyler-Colfax	X	X	X	X			X	X	X	X			X	X	X
George Washington	X	X	X	X			X	X	X	X		X	X		X
Wayne Hills	X	X	X	X			X	X	X	X		X	X		X
Wayne Valley	X	X	X	X	X	X	X	X	X	X	X		X		X
Preakness	X	X	X	X	X	X	X	X							X
Administration	X		X	X			X		X						X

"Page content is subject to Confidentiality Restrictions"

This page is intentionally left blank.

Section C:
Project Results/Recommendations and General Considerations

	Recommended Measures	Tab
ECM 1:	Lighting System Improvements	1
ECM 2:	Lighting Controls	2
ECM 3:	Exterior Lighting	3
ECM 4:	Integrated and New Energy Management System	4
ECM 5:	Steam Trap Replacements	5
ECM 6:	Pipe & Tank Insulation	6
ECM 7:	Building Envelope Improvements	7
ECM 8:	Vending Machine Controls	8
ECM 9:	Premium Efficiency Motors	9
ECM 10:	Walk-in Freezer/Cooler Controllers	10
ECM 11:	High Efficiency Transformers	11
ECM 12:	Replace Boilers	12
ECM 13:	Destratification Fans	13
ECM 14:	Variable Frequency Drives	14
ECM 15:	Computer Load Management	15

"Page content is subject to Confidentiality Restrictions"

General Considerations

Equipment Selection

Equipment will be identified in submittals provided to the Wayne Township School District for approval prior to procurement. In addition, complete product cut-sheets for all specified equipment will be supplied to the District. These documents will be submitted to the District for review and comment. Upon approval, these will constitute the construction documents. Upon completion of the construction phase, the documents will be revised as needed to reflect "As-Built" conditions, and submitted in multiple to the District for their record. Sample product manufacturer specification sheets are provided following each measure description in the measure appendices. Each measure will be fully integrated with District systems.

Design and Compliance

All design and compliance issues that require the professional services of an architect or engineer have been addressed and incorporated by the Ameresco audit and report. A designated engineering team will provide all Design/Engineering, public bid specification preparation work, and gain all permitting approvals needed towards the successful implementation of each defined Energy Conservation Measure comprising the District's ESIP Energy Savings Plan. The team will ensure that any required intermediate design submittals are prepared for Wayne School District's review in a timely fashion. This team will be comprised of Ameresco employees and a NJ based design engineering firm that will be selected by, and contracted directly to, Ameresco during project construction. In addition, Ameresco will work closely with Wayne School District's contracted professional architectural and planning firm, to ensure all design, compliance issues, and approvals are fully addressed. Ameresco will coordinate all ECM pre-bid, public procurement, construction, and project commissioning/verification activities with both the District and selected design and engineering firm. Note all professionals providing engineering services under this Plan shall have errors and omissions insurance.

Risk Assessment

Ameresco has assessed all risk involved towards the successful implementation of the Wayne School District Energy Savings Plan. The calculations of energy savings for each ECM comprising the District Energy Savings Plan were made in accordance with BPU adopted standards and protocols. These calculations included all applicable State and federal rebates and tax credits, but do not include the cost of an energy audit or the cost of verifying energy savings

Commissioning

Ameresco personnel, the installing contractor(s), and qualified third-party commissioning agent (s) representing the District will commission and test the systems at start-up with corroboration by District personnel. The operation of the systems will also be proven at this time. Prior notification of these tests will be provided, and coordinated with the District personnel. Results of the commissioning procedures will be documented and a written report will be provided to District for approval. Any deficiencies in the system will be noted in the report and corrected immediately. In accordance with NJ ESIP legislation, verification by a qualified third party is required when energy conservation measures are placed in service or commissioned, to

"Page content is subject to Confidentiality Restrictions"

ensure the savings projected in the energy savings plan shall be achieved. Ameresco will coordinate project commissioning and verification activities with the District and its designated professionals.

Local Maintenance and Repair Support

Service and maintenance work will be coordinated through Ameresco's headquarters in Framingham, Massachusetts and the local offices located in Red Bank, NJ and Newburgh, NY. Ameresco's Vice President of Construction and Project Managers will coordinate with the installing contractors and other local contractors in order to ensure that the best service is available to District at all times.

Operations and Maintenance

The District currently maintains, or provides for third parties to maintain, its existing equipment. Ameresco proposes that the District continues to maintain the existing equipment and all equipment installed as part of this performance contract.

In accordance with NJ ESIP law (NJ ESIP P.L. 2009, c. 4, N.J.S.A. 18A:18A-4.6 and N.J.S.A. 18A:18A-42), financed energy savings generated through an ESIP may not be used to procure post-construction maintenance service contracts, the optional energy savings guarantee, or third party verification of energy conservation measures and savings. Energy savings may not be used to procure any post-construction maintenance services programs for public school districts, such as mechanical/HVAC or control systems maintenance services contracts. These services, if desired by the Wayne Township School District, the District is required by law to be separately procured, utilizing District funds from existing operating or capital budgets.

Training Provisions

Ameresco recognizes that people learn in different ways. For this reason, we have devised a comprehensive training program that involves on-site, classroom, and visual (manual) learning. Training sessions will include a review of the overall installation and performance history so that everyone understands the benefits of the program. Documentation will include review of O&M manuals, drawings, and equipment specification literature. All facilities personnel will have a comprehensive manual for reference, and Ameresco will continue to conduct on the spot and organized training sessions over the life of the project. Ameresco can also accommodate special or specific training needs or requirements of the District not detailed in this response.

Ameresco's Operation & Maintenance Manager will be responsible for coordinating the delivery of our training program to The District. The training program for facilities and maintenance personnel at the end of the contract performance period will focus on the necessary operations and service requirements after the performance contract is closed out. Training will clearly delineate the long-term service roles of both Ameresco and the District staff.

Each ECM will be reviewed in detail, as the curriculum outlined below details. System overviews will be provided, as well as more detailed examination of specific equipment and/or components. Documentation will include review of the O&M manuals (furnished as part of the "as-built" project documents), drawings, and equipment manufacturers' specification literature.

"Page content is subject to Confidentiality Restrictions"

Ameresco realizes that all installed equipment must be reliable, durable and properly maintained. Even the most efficient systems will not perform properly unless they are properly integrated with the existing infrastructure, and the best installations can cause problems if not carefully coordinated with on-going maintenance practices. Therefore, one of the most important initial steps in the process is proper training.

Outline of training curriculum:

1. Explanation of the Design Concept
   - Design intent
   - Seasonal modes of operation
   - Emergency conditions and operation
   - Comfort conditions/Indoor air quality
   - Energy efficiency considerations
2. Systems operation
   - Operation of individual components, if required: instruction provided by authorized factory technicians
   - Physical location of critical shut-off valves, fire, smoke, and balancing dampers, relief valves, safeties, control panels, etc.
   - System operational procedures for all modes in manual and automatic modes
3. Operation of the control systems
   - Sequences of operation
   - Use of graphical user interfaces
   - Alarms and problem indicators
   - Diagnostics and corrective actions
4. Service and Maintenance
   - Use of the Operation and Maintenance Manuals
   - Instruction and logging procedures for lubrication
   - Instruction from authorized factory technicians
   - Troubleshooting and investigation of malfunctions
5. Recommended procedures for collecting, interpreting, and storing specific performance data

Hazardous Materials

During the comprehensive energy audit Ameresco performed visual inspections all areas to be impacted by the proposed project. The inspections did uncover some suspect material that may potentially contains asbestos, or other hazardous materials, needing abatement that would be required in order for the implementation of the proposed scope of work to be completed. Ameresco, therefore, has included appropriate costs associated with abatement of hazardous materials included in ECM 12, boiler replacements, and the required disposal of any PCB containing ballasts and mercury lamps associated with ECM 1&3 – Lighting interior and exterior system improvements. In the event that any additional hazardous materials requiring special handling are identified during subsequent phases of the proposed project's implementation, work will immediately be halted

"Page content is subject to Confidentiality Restrictions"

at the area in question, and the Ameresco Project Manager will notify the designated District contact. Provisions to accomplish the required additional remediation will be discussed with the District and will be separate from or in addition to, this performance contract.

Guarantee of Energy Savings

In accordance to New Jersey Energy Saving Improvement Program (ESIP) legislation, public institutions, such as the Wayne Township School District are provided the option to have their ESIP energy savings, which financially supports the implementation of their ESP, guaranteed/not guaranteed by their energy services company (ESCO) partner. Wayne Township School District has selected the "guarantee" option for its Energy Savings Improvement Program for the first three years of the project. Ameresco and the District will decide upon a customized measurement and verification (M&V) program that will be used to validate the achievement of saving over the verification term, as a cost as specified in the project financials. Additional details relating to the Ameresco guarantee will be defined per the Ameresco/ Wayne Township School District Energy Services Agreement (ESA).

This page is intentionally left blank.

ECM 1:
Lighting System Improvements

ECM Overview

Ameresco will install a state-of-the-art lighting system to benefit the building occupants of the Wayne School District. Our project replaces or upgrades **16,165** existing fixtures and will enhance the quality, consistency, and color rendering of the lighting system, while meeting all applicable codes and standards.

Our in-house lighting experts completed a detailed survey of your facilities. Ameresco has eliminated the middle-man, and having implemented projects at hundreds of facilities with similar needs, is fully capable and responsible for meeting your lighting needs.

Figure 1.1:.New light fixtures will improve aesthetics and provide substantial energy savings.

ECM Detail

Existing System

- *General Information about the Existing System at All Sites*

We identified over 338 different lamp/ballast/fixture combinations, the majority of which are linear fluorescent, which provide general lighting in key areas such as classrooms, offices, & halls.

- Approximately 52% of linear fluorescent fixtures use standard-grade T8s on electronic ballasts.
- The other 46% of linear fluorescent fixtures use T12s on magnetic ballasts.
- The remaining 2% of fixtures are energy efficient fixtures.
- High-intensity discharge (HID) lamps are used in gyms, the exterior as well as in the library and some parking lots. Color rendition is fair to poor depending on lamp quality and age, which unfortunately can be a characteristic of HID lamps.
- Incandescent lamps are installed in 4% of fixtures.
- Compact fluorescents comprise 1.5% of the existing fixture total.

Although the lighting system is generally performing as designed, significant improvements are possible.

"Page content is subject to Confidentiality Restrictions"

Light levels are appropriate in the majority of areas. A few exceptions were noted, such as Wayne Hills High School Classroom 256 where light levels are above IES standards.

Most fixtures are in good condition. Some noted exceptions, all of which are addressed in our proposal, include: we are replacing old fixtures with new ones in a majority of areas. Like in the gyms they are getting new LED HighBay fixtures where possible.

- *Specific Information about the Existing System*

The detailed description provided below is representative of our proposed scope, with predominant areas and fixtures mentioned first. We then proceed in descending order, with each subsequent area representing a smaller portion of the scope.

- **Randall Carter-Elementary School:** Classrooms use T12 wraps, standard T8 troffers, boxes, incandescent squares. Halls employ standard T8 troffers, wraps, T12 strips, old surface fixtures. Baths employ compact fluorescent squares, decorative fixtures, exhaust fans, old drums, standard T8 old surface fixtures, old wall mounted fixtures. Offices employ standard T8 old surface fixtures, boxes, wraps. Gyms employ MH bay fixtures. Auditoriums employ inefficient T12 "high-output" strips, incandescent surface fixtures. Kitchens employ T12 old surface fixtures, incandescent wall mounted fixtures.
- **Theunis Dey-Elementary School:** Classrooms employ T12 wraps, troffers, standard T8 troffers. Gyms employ standard T8 boxes, T12 boxes. Libraries employ T12 troffers, and old surface fixtures. Halls employ standard T8 troffers, T12 old surface fixtures, troffers, wraps, incandescent old drums. Baths employ compact fluorescent drums, cans, standard T8 troffers. Offices employ standard T8 troffers, industrials, wraps, T12 old surface fixtures, troffers, wraps, industrials. Kitchens employ standard T8 old surface fixtures, incandescent wall mounted fixtures, surface fixtures, compact fluorescent old wall mounted fixtures. Cafeterias employ MH bay fixtures. Auditoriums employ inefficient T12 "high-output" strips.
- **James Fallon-Elementary School:** Classrooms employ standard T8 troffers, boxes, T5 "biax" wallwash, compact fluorescent cans, drums. Halls employ standard T8 indirects, troffers, boxes, wraps, compact fluorescent cans, drums, MH cans, T5 "biax" indirects. Cafeterias employ compact fluorescent cans, T5 "biax" indirects, standard T8 troffers. Libraries employ compact fluorescent cans, standard T8 indirects, T5 "biax" indirects, incandescent quartz cans. Offices employ standard T8 troffers, wraps, compact fluorescent cans. Baths employ incandescent exhaust fans, standard T8 strips, wraps, compact fluorescent cans, T5 "biax" indirects. Auditoriums employ incandescent cans. Gyms employ Metal Halide bay fixtures. Kitchens employ standard T8 troffers, compact fluorescent cans, incandescent wall mounted fixtures.
- **John F. Kennedy-Elementary School:** Classrooms employ T12 old surface fixtures, troffers, compact fluorescent drums. Halls employ T12 old surface fixtures, troffers, wraps, compact fluorescent drums. Libraries employ compact fluorescent cans, surface fixtures, T12 troffers. Baths employ standard T8 troffers, old surface fixtures, wraps, incandescent old drums, compact fluorescent drums, and T12 vanities. Offices employ T12 troffers, old surface fixtures, wraps, vanities, and standard T8 decorative fixtures. Auditoriums employ compact fluorescent surface fixtures,

incandescent sconces, and surface fixtures. Kitchens employ T12 old surface fixtures, standard T8 troffers, and incandescent wall mounted fixtures. Gyms employ MH bay fixtures.

- **Lafayette-Elementary School:** Classrooms employ T12 wraps, old surface fixtures, and troffers. Halls employ standard T8 boxes, troffers, T12 troffers, and wraps. Libraries employ T12 boxes, and troffers. Gyms employ T12 old surface fixtures. Baths employ T12 wraps, troffers, standard T8 troffers, wraps, vanities, incandescent squares, and old drums. Cafeterias employ T12 wraps. Offices employ T12 wraps, standard T8 troffers, wraps, compact fluorescent drums, surface fixtures. Kitchens employ T12 old surface fixtures, incandescent wall mounted fixtures, standard T8 wraps.
- **Packanack-Elementary School:** Classrooms employ standard T8 wraps, old surface fixtures, troffers, T12 troffers. Halls employ standard T8 troffers, boxes, T12 troffers, wraps, strips, old surface fixtures. Libraries employ T12 troffers, MH indirects, standard T8 troffers. Cafeterias employ T12 wraps, and standard T8 wraps. Baths employ compact fluorescent squares, cans, standard T8 boxes, vanities, T12 troffers, old surface fixtures, incandescent old wall mounted fixtures, surface fixtures. Offices employ T12 troffers, decorative fixtures, standard T8 troffers, wraps, old surface fixtures, boxes. Gyms employ T5 wraps. Kitchens employ T12 old surface fixtures, standard T8 old surface fixtures. Auditoriums employ incandescent surface fixtures, inefficient T12 "high-output" strips.
- **Pines Lake-Elementary School:** Classrooms employ T12 troffers, old surface fixtures, standard T8 wraps, troffers. Halls employ T12 troffers, strips, standard T8 troffers, compact fluorescent indirects, cans, surface fixtures, incandescent decorative fixtures, squares. Libraries employ T12 troffers, indirects, decorative fixtures, compact fluorescent cans, standard T8 troffers. Offices employ T12 troffers, standard T8 old surface fixtures, and wraps. Baths employ incandescent wall mounted fixtures, old drums, vanities, standard T8 troffers, boxes, wraps, T12 troffers. Cafeterias employ T12 indirects. Kitchens employ T12 old surface fixtures. Gyms employ MH bay fixtures. Auditoriums employ T5 strips, incandescent wall mounted fixtures.
- **Ryerson-Elementary School:** Classrooms employ T12 old surface fixtures, standard T8 old surface fixtures, troffers, tubes, task lights. Halls employ standard T8 troffers, decorative fixtures, compact fluorescent drums. Offices employ T12 old surface fixtures, troffers, wraps, standard T8 old surface fixtures, troffers, old wall mounted fixtures, wraps, compact fluorescent drums. Baths employ compact fluorescent squares, cans, T12 troffers, old surface fixtures, incandescent cans, old wall mounted fixtures, standard T8 vanities. Libraries employ standard T8 troffers, T12 troffers. Cafeterias employ T12 troffers, standard T8 troffers. Gyms employ MH bay fixtures. Kitchens employ T12 old surface fixtures, standard T8 wraps. Auditoriums employ compact fluorescent bay fixtures, incandescent bay fixtures.
- **Albert Payson Terhune-Elementary School:** Classrooms employ T12 wraps, old surface fixtures, troffers. Gyms employ standard T8 boxes, MH bay fixtures. Halls employ T12 troffers, standard T8 troffers. Offices employ T12 troffers, industrials, old surface fixtures, standard T8 decorative fixtures, incandescent cans. Baths employ incandescent old drums, squares, T12 troffers, vanities, old surface fixtures, standard T8 wraps, vanities. Libraries employ T12 indirects, old surface fixtures. Kitchens employ T12 old surface fixtures, wraps, incandescent sconces, wall mounted fixtures. Auditoriums employ T12 strips, and incandescent decorative fixtures.

"Page content is subject to Confidentiality Restrictions"

- **Anthony Wayne-Middle School:** Classrooms employ standard T8 troffers, indirects, T5 "biax" troffers. Halls employ compact fluorescent cans, sconces, standard T8 troffers, decorative fixtures, T5 "biax" wallwash, T5 coves, indirects, efficient 4' T8 28w indirects, MH indirects. Baths employ standard T8 troffers, vanities, T5 "biax" troffers, compact fluorescent cans. Offices employ standard T8 troffers, indirects, MH cans, indirects, T5 "biax" troffers. Libraries employ standard T8 indirects. Gyms employ MH indirects. Cafeterias employ standard T8 indirects, incandescent decorative fixtures. Kitchens employ compact fluorescent cans, standard T8 troffers, incandescent wall mounted fixtures, T5 "biax" troffers. Shops employ T5 vapor tights. Auditoriums employ compact fluorescent surface fixtures, MH bay fixtures.
- **Schuyler-Colfax-Middle School:** Classrooms employ T12 troffers, decorative fixtures, wraps, standard T8 troffers, indirects, old surface fixtures, old wall mounted fixtures. Halls employ standard T8 troffers, old recessed fixtures, T12 old recessed fixtures, troffers, old wall mounted fixtures, incandescent squares, compact fluorescent squares. Offices employ standard T8 troffers, boxes, wraps, vanities, old surface fixtures, T12 old surface fixtures, troffers, decorative fixtures, old wall mounted fixtures, wraps, valances, strips, incandescent surface fixtures. Gyms employ T12 old surface fixtures, MH squares. Cafeterias employ T12 troffers, standard T8 troffers, old surface fixtures. Libraries employ T12 troffers, valances. Baths employ standard T8 troffers, vanities, boxes, wraps, old wall mounted fixtures, T12 old surface fixtures, troffers, wraps, compact fluorescent squares, drums, incandescent squares. Kitchens employ T12 old surface fixtures, troffers, incandescent wall mounted fixtures. Auditoriums employ inefficient T12 "high-output" strips, incandescent wall mounted fixtures.
- **George Washington-Middle School:** Classrooms employ T12 old surface fixtures, troffers, wraps, standard T8 wraps, indirects, inefficient T12 "high-output" old surface fixtures, incandescent cans, T5 "biax" troffers. Halls employ T12 troffers, circular fixtures, boxes, standard T8 troffers, wraps, old surface fixtures. Gyms employ MH bay fixtures, standard T8 boxes, T12 boxes, incandescent squares, cans. Offices employ T12 old surface fixtures, wraps, standard T8 troffers, wraps, compact fluorescent drums. Baths employ T12 old surface fixtures, troffers, vanities, standard T8 troffers, vanities, boxes, wraps, incandescent old drums, cans, compact fluorescent troffers, drums, T5 "biax" troffers. Cafeterias employ T12 troffers, standard T8 troffers, incandescent aisle fixtures, MH cans. Libraries employ T12 troffers, standard T8 troffers. Auditoriums employ T12 troffers, compact fluorescent cans, decorative fixtures, MH bay fixtures, incandescent aisle fixtures, cans. Kitchens employ T12 old surface fixtures, troffers.
- **Wayne Hills-High School:** Classrooms employ standard T8 troffers, wraps, indirects, efficient 4' T8 28w wraps, troffers, incandescent cans, old drums, compact fluorescent cans. Halls employ standard T8 troffers, boxes, strips, circular fixtures, decorative fixtures, wraps, efficient 4' T8 28w troffers, boxes, wraps, strips, T12 old surface fixtures, strips, compact fluorescent cans, T5 "biax" wallwash, troffers, MH indirects, incandescent squares, cans. Offices employ standard T8 troffers, wraps, decorative fixtures, strips, efficient 4' T8 28w wraps, incandescent cans, drums, T12 old surface fixtures, old wall mounted fixtures, troffers, compact fluorescent cans. Baths employ standard T8 troffers, wraps, vapor tights, old surface fixtures, vanities, boxes, old wall mounted fixtures, efficient 4' T8 28w wraps, HPS squares, T5 "biax" troffers, T12 old wall mounted fixtures, wraps, vanities, compact fluorescent drums, incandescent cans, old drums. Cafeterias employ standard T8 troffers, coves, circular fixtures, incandescent cans. Gyms employ MH troffers, bay fixtures, standard T8

wraps, incandescent old drums. Libraries employ standard T8 troffers, coves, wraps. Auditoriums employ incandescent cans, surface fixtures, and aisle fixtures. Kitchens employ standard T8 troffers, wraps, T12 troffers, efficient 4' T8 28w wraps.

- **Wayne Valley-High School:** Classrooms employ T12 old surface fixtures, troffers, wraps, standard T8 troffers, indirects, wraps, old surface fixtures. Halls employ T12 old surface fixtures, troffers, strips, decorative fixtures, wraps, standard T8 troffers, decorative fixtures, old wall mounted fixtures, strips, vapor tights, old surface fixtures, compact fluorescent cans, surface fixtures, MH indirects, incandescent squares, surface fixtures. Offices employ T12 old surface fixtures, troffers, wraps, boxes, strips, standard T8 troffers, old surface fixtures, wraps, incandescent cans, old drums, decorative fixtures, compact fluorescent cans. Baths employ T12 old surface fixtures, troffers, wraps, old wall mounted fixtures, vanities, standard T8 troffers, vapor tights, vanities, wraps, incandescent squares, compact fluorescent squares, cans, surface fixtures, T5 "biax" troffers. Libraries employ T12 troffers, standard T8 troffers, compact fluorescent cans, incandescent cans. Gyms employ MH bay fixtures, T12 industrials, old surface fixtures. Auditoriums employ incandescent cans, surface fixtures, MH cans, T12 strips. Cafeterias employ T12 old surface fixtures, MH indirects. Kitchens employ T12 troffers, incandescent wall mounted fixtures, standard T8 wraps, compact fluorescent cans. Shops employ T12 industrials. Retail spaces employ T12 old surface fixtures.
- **Preakness (Library Community Center):** Classrooms employ standard T8 troffers, old surface fixtures. Offices employ standard T8 troffers, boxes, old recessed fixtures, wraps, incandescent old drums, surface fixtures, T12 old wall mounted fixtures. Libraries employ standard T8 troffers, incandescent cans. Halls employ standard T8 troffers, wraps, boxes, old surface fixtures, incandescent exits, T12 troffers. Baths employ standard T8 troffers, wraps, vanities, incandescent squares, old wall mounted fixtures, old surface fixtures, T12 old wall mounted fixtures, old surface fixtures, vanities. Auditoriums employ MH squares, incandescent wall mounted fixtures. Kitchens employ T12 old wall mounted fixtures.
- **Board of Ed Administration:** Offices employ standard T8 troffers, old surface fixtures, wraps, T12 troffers, boxes, compact fluorescent surface fixtures. Halls employ standard T8 troffers, old surface fixtures, wraps, compact fluorescent old drums. Warehouses employ standard T8 industrials. Baths employ standard T8 troffers, incandescent cans. Shops employ standard T8 vapor tights.

"Page content is subject to Confidentiality Restrictions"

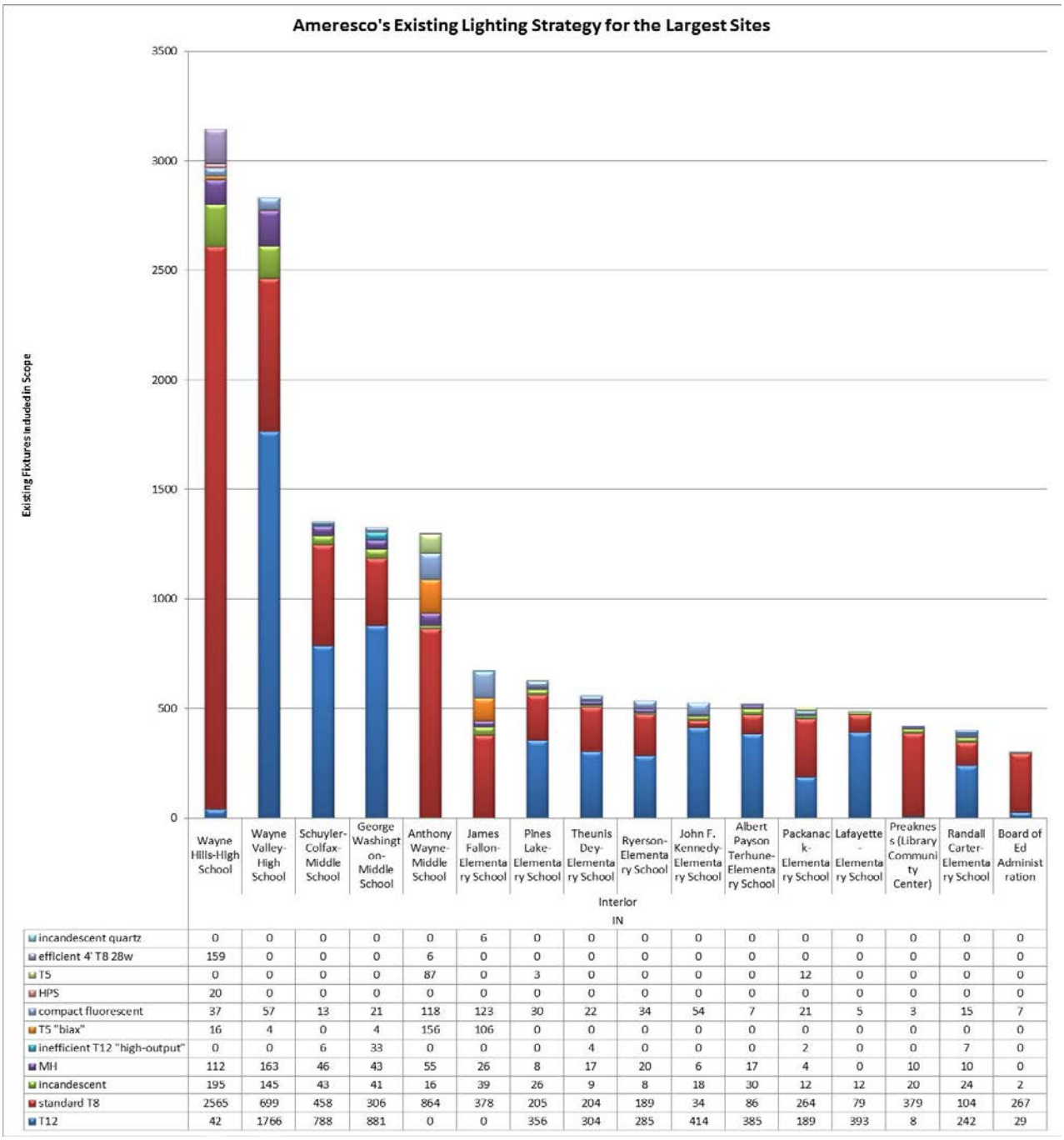

Interior IN	Wayne Hills-High School	Wayne Valley-High School	Schuyler-Colfax-Middle School	George Washington-Middle School	Anthony Wayne-Middle School	James Fallon-Elementary School	Pines Lake-Elementary School	Theunis Dey-Elementary School	Ryerson-Elementary School	John F. Kennedy-Elementary School	Albert Payson Terhune-Elementary School	Packanack-Elementary School	Lafayette-Elementary School	Preaknes s (Library Community Center)	Randall Carter-Elementary School	Board of Ed Administration
incandescent quartz	0	0	0	0	0	6	0	0	0	0	0	0	0	0	0	0
efficient 4' T8 28w	159	0	0	0	6	0	0	0	0	0	0	0	0	0	0	0
T5	0	0	0	0	87	0	3	0	0	0	0	12	0	0	0	0
HPS	20	0	0	0	0	0	0	0	0	0	0	0	0	0	0	0
compact fluorescent	37	57	13	21	118	123	30	22	34	54	7	21	5	3	15	7
T5 "biax"	16	4	0	4	156	106	0	0	0	0	0	0	0	0	0	0
inefficient T12 "high-output"	0	0	6	33	0	0	0	4	0	0	0	2	0	0	7	0
MH	112	163	46	43	55	26	8	17	20	6	17	4	0	10	10	0
incandescent	195	145	43	41	16	39	26	9	8	18	30	12	12	20	24	2
standard T8	2565	699	458	306	864	378	205	204	189	34	86	264	79	379	104	267
T12	42	1766	788	881	0	0	356	304	285	414	385	189	393	8	242	29

Proposed System

- *General Information about the Proposed System*

Ameresco standardized the lighting system where practical, reducing the number of different products the District must purchase, stock and maintain. Most fixtures replaced or retrofitted with 4' T8 lamps will receive **28**-watt "energy-efficient" lamps and instant-start ballasts. This premium combination yields maximum energy savings without sacrificing light output or quality. These **28**-watt lamps use a superior mix of phosphors that allow them to consume less energy while matching the light output of standard T8's. The **28**-watt lamp also maintains light output better than T12 and typical T8 lamps.

Ballast outputs were tailored to deliver optimum light levels in each room. The new lighting system is designed to maintain lighting levels, while meeting IESNA standards in affected areas. All recommendations were made with the intent to optimize energy savings without compromising the quality and the level of light output.

All fixtures in our scope of work that have reached the end of their service life will be replaced.

Our project replaces or upgrades **16,165** existing fixtures. We consider two adjoining fixtures sharing a ballast to be a single fixture. This method provides a more precise assessment of energy consumption and material inventory, but sometimes results in a lower apparent fixture count.

Following are highlights of the proposed scope, with predominant applications presented first. We then proceed in descending order, with each subsequent item representing a smaller portion of the scope. Please refer to the "Lighting System Analysis" in Appendix I, as this is a complete list of work to be performed.

- *Specific Information about the Proposed System, by Building*

- **Existing fixtures shall be replaced with new wraps for:** Wayne Valley-High School, Wayne Hills-High School, Schuyler-Colfax-Middle School, George Washington-Middle School, John F. Kennedy-Elementary School, Ryerson-Elementary School, Lafayette-Elementary School, Theunis Dey-Elementary School, Albert Payson Terhune-Elementary School, Packanack-Elementary School, Pines Lake-Elementary School, Randall Carter-Elementary School, Preakness (Library Community Center), Board of Ed Administration, Anthony Wayne-Middle School, James Fallon-Elementary School.
- **Existing fixtures will receive T8 lamps, electronic ballasts, and RT8 kits for:** Wayne Hills-High School, Anthony Wayne-Middle School, Wayne Valley-High School, George Washington-Middle School, James Fallon-Elementary School, Pines Lake-Elementary School, Preakness (Library Community Center), Schuyler-Colfax-Middle School, Packanack-Elementary School, Lafayette-Elementary School, Board of Ed Administration, Ryerson-Elementary School, Theunis Dey-Elementary School, Randall Carter-Elementary School, John F. Kennedy-Elementary School, Albert Payson Terhune-Elementary School.
- **Existing fixtures will receive T8 lamps and electronic ballasts for:** Wayne Hills-High School, Wayne Valley-High School, Anthony Wayne-Middle School, Schuyler-Colfax-Middle School, George

Washington-Middle School, Pines Lake-Elementary School, Preakness (Library Community Center), Albert Payson Terhune-Elementary School, Theunis Dey-Elementary School, James Fallon-Elementary School, Ryerson-Elementary School, Lafayette-Elementary School, Board of Ed Administration, Randall Carter-Elementary School, John F. Kennedy-Elementary School, Packanack-Elementary School.

- **Existing fixtures will receive T8 lamps, electronic ballasts, and reflectors for:** Wayne Valley-High School, George Washington-Middle School, Board of Ed Administration, Schuyler-Colfax-Middle School, Theunis Dey-Elementary School, Wayne Hills-High School, Packanack-Elementary School, Albert Payson Terhune-Elementary School, Preakness (Library Community Center), John F. Kennedy-Elementary School, Anthony Wayne-Middle School, James Fallon-Elementary School, Ryerson-Elementary School, Pines Lake-Elementary School, Randall Carter-Elementary School, Lafayette-Elementary School.
- **Existing fixtures shall be replaced with new LED high-bays for:** Wayne Valley-High School, Wayne Hills-High School, Schuyler-Colfax-Middle School, Anthony Wayne-Middle School, George Washington-Middle School, Ryerson-Elementary School, Albert Payson Terhune-Elementary School, James Fallon-Elementary School, Preakness (Library Community Center), Randall Carter-Elementary School, Pines Lake-Elementary School, John F. Kennedy-Elementary School.
- **Existing fixtures will receive compact fluorescent lamps for:** Wayne Valley-High School, Schuyler-Colfax-Middle School, Wayne Hills-High School, James Fallon-Elementary School, Randall Carter-Elementary School, Pines Lake-Elementary School, Preakness (Library Community Center), Albert Payson Terhune-Elementary School, Lafayette-Elementary School, Anthony Wayne-Middle School, Theunis Dey-Elementary School, George Washington-Middle School, John F. Kennedy-Elementary School, Ryerson-Elementary School.
- **Existing fixtures will receive biax lamps and electronic ballasts for:** Anthony Wayne-Middle School, James Fallon-Elementary School, Wayne Hills-High School, Wayne Valley-High School, George Washington-Middle School.
- **Existing fixtures shall be replaced with new acrylic troffers for:** Schuyler-Colfax-Middle School, Wayne Hills-High School, Wayne Valley-High School, John F. Kennedy-Elementary School, Albert Payson Terhune-Elementary School, Theunis Dey-Elementary School, James Fallon-Elementary School, Preakness (Library Community Center), George Washington-Middle School, Pines Lake-Elementary School, Packanack-Elementary School, Randall Carter-Elementary School, Lafayette-Elementary School, Board of Ed Administration, Ryerson-Elementary School.
- **Existing fixtures will receive a led screw-base for:** Wayne Hills-High School, Wayne Valley-High School, George Washington-Middle School, James Fallon-Elementary School, Preakness (Library Community Center), Board of Ed Administration, Ryerson-Elementary School, Albert Payson Terhune-Elementary School.
- **Existing fixtures shall be replaced with new vanities for:** Schuyler-Colfax-Middle School, Wayne Hills-High School, Anthony Wayne-Middle School, George Washington-Middle School, Wayne Valley-High School, Preakness (Library Community Center), Packanack-Elementary School, Pines Lake-Elementary School, Albert Payson Terhune-Elementary School, Ryerson-Elementary School, John F. Kennedy-Elementary School, Lafayette-Elementary School, Randall Carter-Elementary School.

- **Existing fixtures will receive T8 lamps, electronic ballasts, and retrofit kits for:** Wayne Valley-High School, Wayne Hills-High School, George Washington-Middle School, Schuyler-Colfax-Middle School, Randall Carter-Elementary School, Theunis Dey-Elementary School, Albert Payson Terhune-Elementary School, Packanack-Elementary School, Ryerson-Elementary School.
- **Existing fixtures will receive a led conversion kit for:** Wayne Valley-High School, Wayne Hills-High School, James Fallon-Elementary School, George Washington-Middle School, Anthony Wayne-Middle School.
- **Existing fixtures will receive T8 lamps, electronic ballasts, and new sockets for:** George Washington-Middle School.
- **Existing fixtures shall be replaced with a new led track head for:** James Fallon-Elementary School, Wayne Valley-High School.
- **Existing fixtures shall be replaced with new industrials for:** George Washington-Middle School, Wayne Valley-High School.
- **Existing fixtures shall be replaced with new vaportights for:** George Washington-Middle School.
- **Existing fixtures shall be replaced with a new led wallpack for:** Schuyler-Colfax-Middle School, Wayne Hills-High School, Randall Carter-Elementary School, Lafayette-Elementary School, Pines Lake-Elementary School.
- **Existing fixtures shall be replaced with new exit signs for:** Preakness (Library Community Center).
- **Existing fixtures will receive a led screw-base for:** Board of Ed Administration, Wayne Hills-High School, Preakness (Library Community Center).
- **Existing fixtures will receive compact fluorescent lamps for:** George Washington-Middle School, Schuyler-Colfax-Middle School, Preakness (Library Community Center), Ryerson-Elementary School, Wayne Hills-High School.

"Page content is subject to Confidentiality Restrictions"

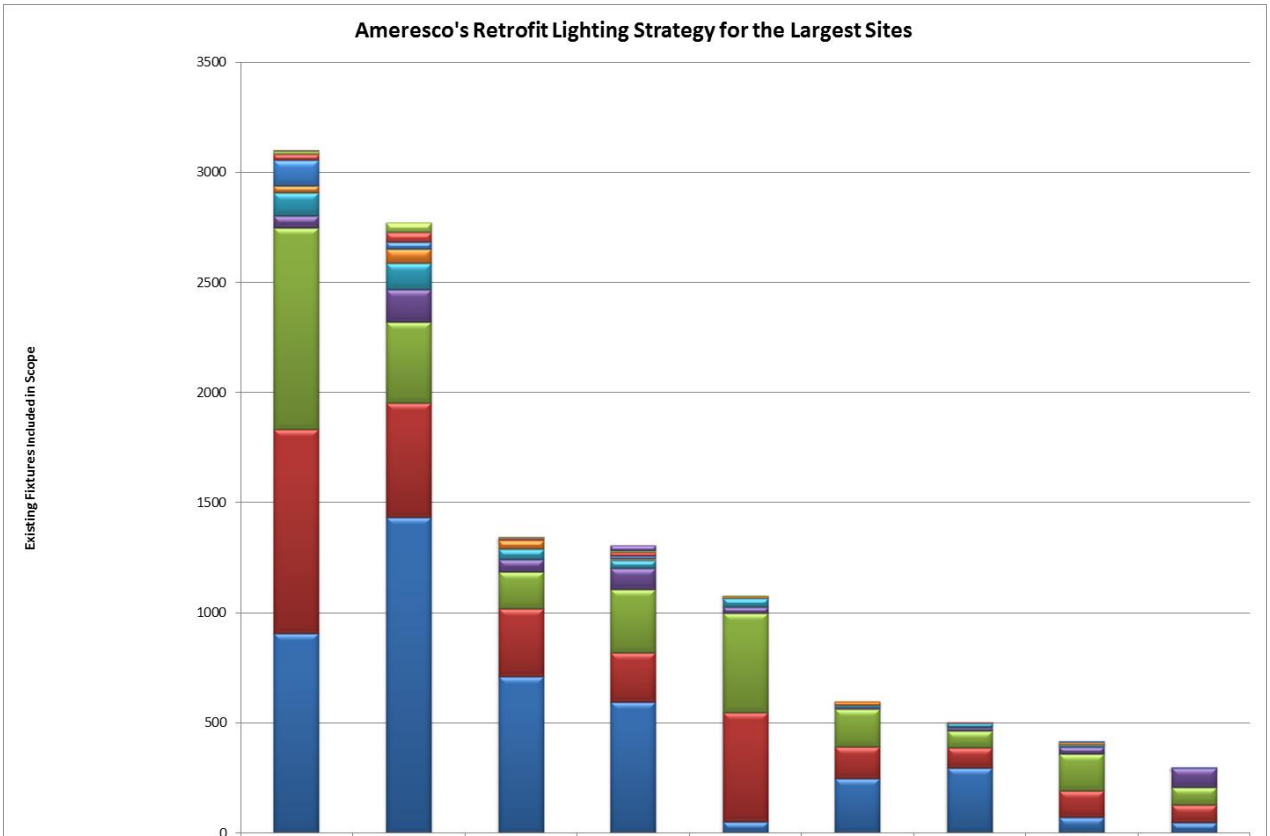

Interior IN	Wayne Hills-High School	Wayne Valley-High School	Schuyler-Colfax-Middle School	George Washington-Middle School	Anthony Wayne-Middle School	Pines Lake-Elementary School	Ryerson-Elementary School	Preakness (Library Community Center)	Board of Ed Administration
New Exit Sign LED	0	0	0	0	0	0	0	1	0
New Exterior LED	2	0	3	0	0	1	0	0	0
Redesign	4	0	7	0	0	0	0	0	0
Relamp/Reballast & Sockets LF	0	0	0	26	0	0	0	0	0
custom Kit LED	12	43	0	7	4	0	0	0	0
Relamp/Reballast & Kit LF	26	44	8	17	0	0	1	0	0
Screw-Base LED	118	33	0	13	0	0	2	2	2
Screw-Base CF	32	66	39	5	8	15	1	12	0
New LED	104	118	46	36	40	8	20	10	0
Relamp/Reballast & Reflector LF	53	146	58	97	30	9	13	33	89
Relamp/Reballast & RTKit LF	915	368	167	287	450	171	77	167	80
Relamp/Reballast LF	927	520	309	226	498	145	93	121	79
New LF	908	1435	710	594	51	247	295	71	48

> Equipment, Design and Construction Documentation

Equipment will be identified in submittals provided for approval prior to procurement. The lighting system audit completed for each facility will be submitted as the basis for construction. The audit will include the existing descriptions, operating hours, and proposed retrofit description. These documents will be submitted for review and comment. Upon approval, these will constitute the construction documents. Upon completion of the construction phase, the documents will be revised as needed to reflect "As-Built" conditions, and submitted in multiple for record.

> Impact on Facility Operations and Performance

All installations will be conducted after school hours, and will be coordinated with the appointed personnel.

Despite our best efforts, cataloguing every single fixture in every location is extremely difficult and time consuming. Therefore, fixtures or areas not listed are excluded from our scope, which typically include areas under renovation, low use areas such as closets and crawlspaces, areas inaccessible during the audit, and specialty fixtures such as medical or stage lighting.

Integration of Proposed Equipment with Existing Systems

The new lighting system, and all components thereof, will be fully integrated into the existing lighting systems. We assume the entire lighting and lighting controls systems comply with, but not limited to, the latest codes, the latest standards, local jurisdictions, and work was done in a quality workmanship manner, per NECA, and other applicable recommend best practices universally accepted throughout the electrical industry. Further we assume that all existing devices, which are defined in NEC, which includes but not limited to switches, outlets, wiring, etc. are in acceptable condition in order to implement our scope as outlined in the contract documents. All existing junction boxes, poles, mounting surfaces and structures are assumed to be in acceptable condition to allow the installation of the products indicated in the scope. Required upgrades to meet safety or other codes, and/or to prepare the location for the installation as described above, can be performed on a time and material basis.

Maintenance Savings

Implementation of this measure will result in annual maintenance savings, since installation of new equipment will extend service intervals. The savings from the annualized cost of maintaining the existing lighting equipment is estimated to be about **$26,689**. This is based on the calculated frequency of equipment replacement of the old system versus the new system.

Environmental Impact

There are no potential adverse environmental impacts associated with this lighting upgrade. During construction, Ameresco will remove, package, and recycle all existing lamps that contain mercury and ballasts that contain PCBs or DEHP according to applicable regulations.

"Page content is subject to Confidentiality Restrictions"

This page is intentionally left blank.

Appendix for ECM 1:
Lighting System Improvements

I. Energy Savings Calculations

This page is intentionally left blank.

Project Template	
Energy and Demand Savings Summary	
Measure ID:	**1**
Measure Name:	**Lighting System Improvements**
Measure Location:	
Engineers:	

Site Name:		**Carter ES**	**Dey ES**	**Fallon ES**	**Kennedy ES**	**Lafayette ES**	**Packanack ES**	**Pines Lake ES**	**Ryerson ES**	**Terhune ES**	**Anthony Wayne MS**	**Colfax MS**	**Washington MS**	**Wayne Hills HS**	**Wayne Valley HS**	**Preakness**	**Admin**	**Summary**
Item	Units	Savings	Savings	Savings	Savings	Savings	Savings	Savings	Savings	Savings	Savings	Savings	Savings	Savings	Savings	Savings	Savings	
Electricity																		
Energy On-Peak	kWh	60,264	45,490	64,890	80,666	79,157	69,774	85,802	83,166	82,845	104,414	263,969	236,337	396,265	486,306	41,203	29,695	2,210,243
Energy Off-Peak	kWh	0	0	0	0	0	0	0	0	0	0	0	0	0	0	0	0	0
Energy Total	kWh	60,264	45,490	64,890	80,666	79,157	69,774	85,802	83,166	82,845	104,414	263,969	236,337	396,265	486,306	41,203	29,695	2,210,243
Demand On-Peak, Monthly	kW	22.9	17.4	21.6	29.8	27.9	26.1	30.0	31.3	31.0	37.5	85.7	78.9	139.0	165.6	15.5	10.4	770.6
Demand On-Peak, Annual	kW	252.3	191.2	237.2	328.0	307.3	287.5	329.8	344.4	340.9	412.3	942.5	867.6	1,529.2	1,821.4	170.2	114.6	8,476.4
Demand Off-Peak, Monthly	kW	0.0	0.0	0.0	0.0	0.0	0.0	0.0	0.0	0.0	0.0	0.0	0.0	0.0	0.0	0.0	0.0	0.0
Demand Off-Peak, Annual	kW	0.0	0.0	0.0	0.0	0.0	0.0	0.0	0.0	0.0	0.0	0.0	0.0	0.0	0.0	0.0	0.0	0.0
Fossil Fuel																		0
Natural Gas (NG)	Therms	-890	-648	-807	-1,174	-1,115	-1,040	-1,211	-1,223	-1,223	-1,271	-3,887	-3,298	-5,723	-7,026	-602	-404	-31,542
Liquid Propane Gas (LPG)	Gallons	0	0	0	0	0	0	0	0	0	0	0	0	0	0	0	0	0
Steam	Mlbs	0	0	0	0	0	0	0	0	0	0	0	0	0	0	0	0	0
Fuel Oil, #2	Gallons	0	0	0	0	0	0	0	0	0	0	0	0	0	0	0	0	0
Fuel Oil, #4	Gallons	0	0	0	0	0	0	0	0	0	0	0	0	0	0	0	0	0
Fuel Oil, #6	Gallons	0	0	0	0	0	0	0	0	0	0	0	0	0	0	0	0	0
Miscellaneous	Misc	0	0	0	0	0	0	0	0	0	0	0	0	0	0	0	0	0
Water																		0
Water Savings	kGallons																	0
Sewer																		0
Sewer Savings	kGallons																	0

Project Template
Interactive Lighting Savings Calculation

	Lighting Savings		Heating Penalty				Cooling Benefit			
A	B	C	D	E	F	G	H	I	J	K
Facility	Annual kW	Annual kWh	Heat Gain to Space	Heating Months	Heating System Efficiency	Heating Penalty MMBtu	Total Space Cooled	Cooling Months	Cooling System COP	Cooling Benefit MMBtu
Randall Carter-Elementary School	22.9	59,452	80.0%	5.0	76.0%	(89.0)	12.0%	4.0	2.34	2.8
Theunis Dey-Elementary School	17.4	44,445	80.0%	5.0	78.0%	(64.8)	31.0%	4.0	3.52	3.6
James Fallon-Elementary School	21.6	60,315	80.0%	5.0	85.0%	(80.7)	75.0%	4.0	2.64	15.6
John F. Kennedy-Elementary School	29.8	78,423	80.0%	5.0	76.0%	(117.4)	33.0%	4.0	3.08	7.7
Lafayette-Elementary School	27.9	74,487	80.0%	5.0	76.0%	(111.5)	62.0%	4.0	2.64	15.9
Packanack-Elementary School	26.1	69,487	80.0%	5.0	76.0%	(104.0)	5.0%	4.0	3.22	1.0
Pines Lake-Elementary School	30.0	80,894	80.0%	5.0	76.0%	(121.1)	60.0%	4.0	2.64	16.8
Ryerson-Elementary School	31.3	81,679	80.0%	5.0	76.0%	(122.3)	24.0%	4.0	3.52	5.1
Albert Payson Terhune-Elementary School	31.0	81,681	80.0%	5.0	76.0%	(122.3)	18.0%	4.0	3.37	4.0
Anthony Wayne-Middle School	37.5	95,285	80.0%	5.0	85.3%	(127.1)	100.0%	4.0	2.78	31.2
Schuyler-Colfax-Middle School	85.7	259,672	80.0%	5.0	76.0%	(388.7)	20.0%	4.0	3.22	14.7
George Washington-Middle School	78.9	231,923	80.0%	5.0	80.0%	(329.8)	23.0%	4.0	3.22	15.1
Wayne Hills-High School	139.0	382,346	80.0%	5.0	76.0%	(572.3)	50.0%	4.0	3.66	47.5
Wayne Valley-High School	165.6	481,746	80.0%	5.0	78.0%	(702.6)	13.0%	4.0	3.66	15.6
Preakness (Library Community Center)	15.5	40,187	80.0%	5.0	76.0%	(60.2)	25.0%	4.0	2.64	3.5
Board of Ed Administration	10.4	26,968	80.0%	5.0	76.0%	(40.4)	100.0%	4.0	2.64	9.3
Totals	**770.6**	**2,148,990**				**(3,154.2)**				**209.1**

Notes:	
A	Applicable building included in comprehensive energy audit
B	Lighting demand savings {kW} associated with lighting retrofit measures
C	Lighting energy savings {kWh} associated with lighting retrofit measures
D	Estimated percentage of lighting energy transmitted to conditioned space
E	Estimated length of heating season
F	Estimated heating system efficiency, interacted with other measures
G	Resulting heating penalty due to lighting upgrades = [col C] x [col D] x 3,413 x ([col E] / 12) / [col F] / 1,000,000
H	Estimated percentage of space cooled
I	Estimated Length of cooling season
J	Estimated cooling system efficiency, interacted with other measures
K	Resulting cooling benefit due to lighting upgrades = [col C] x [col D] x 3,413 x ([col I] / 12) / [col J] / 1,000,000

In or Out	ECM	Line	Building Name	Location	Fl	Pre Fixture Description	Pre Fixture Style	Pre Qty	Pre Watts	Pre kW	Post Fixture Description	Post Fixture Style	Post Qty	Post Watts	Post kW	kW Saved	kWH Saved	Annual Hours
IN	Interior	1	George Washington-Middle S	Classroom 201	2	4L4' T12 EE/EEMAG-8'	wrap	3	140	0.4	2L4' T8 28w/ELEE HI/NEW-8'	new wrap	3	64	0.2	0.2	648	2,840
IN	Interior	2	George Washington-Middle S	Classroom 201	2	4L4' T12 EE/EEMAG-8'	wrap	6	140	0.8	2L4' T8 28w/ELEE HI/NEW-8'	new wrap	6	64	0.4	0.5	1,295	2,840
IN	Interior	3	George Washington-Middle S	Classroom 202	2	4L4' T12 EE/EEMAG-8'	wrap	3	140	0.4	2L4' T8 28w/ELEE HI/NEW-8'	new wrap	3	64	0.2	0.2	648	2,840
IN	Interior	4	George Washington-Middle S	Classroom 202	2	4L4' T12 EE/EEMAG-8'	wrap	6	140	0.8	2L4' T8 28w/ELEE HI/NEW-8'	new wrap	6	64	0.4	0.5	1,295	2,840
IN	Interior	5	George Washington-Middle S	Classroom 203	2	4L4' T12 EE/EEMAG-8'	wrap	3	140	0.4	2L4' T8 28w/ELEE HI/NEW-8'	new wrap	3	64	0.2	0.2	648	2,840
IN	Interior	6	George Washington-Middle S	Classroom 203	2	4L4' T12 EE/EEMAG-8'	wrap	6	140	0.8	2L4' T8 28w/ELEE HI/NEW-8'	new wrap	6	64	0.4	0.5	1,295	2,840
IN	Interior	7	George Washington-Middle S	Classroom 204	2	4L4' T12 EE/EEMAG-8'	wrap	3	140	0.4	2L4' T8 28w/ELEE HI/NEW-8'	new wrap	3	64	0.2	0.2	648	2,840
IN	Interior	8	George Washington-Middle S	Classroom 204	2	4L4' T12 EE/EEMAG-8'	wrap	6	140	0.8	2L4' T8 28w/ELEE HI/NEW-8'	new wrap	6	64	0.4	0.5	1,295	2,840
IN	Interior	9	George Washington-Middle S	Stair	s	2L4' T12 U EE/EEMAG	trof acr	2	70	0.1	2L2' T8 15w/ELEE HI/RFL	rlrb rfl	2	33	0.1	0.1	269	3,640
IN	Interior	10	George Washington-Middle S	Stair	s	2L4' T8 U/EL	trof acr	1	60	0.1	2L2' T8 15w/ELEE HI/RFL	rlrb rfl	1	33	0.0	0.0	98	3,640
IN	Interior	11	George Washington-Middle S	Stair	s	2L4' T8 32w/EL	trof opaque 1' wid	1	60	0.1	2L4' T8 28w/ELEE LO	rlrb	1	42	0.0	0.0	66	3,640
IN	Interior	12	George Washington-Middle S	Stair By 210	s	2L4' T8 32w/EL	trof acr 1' wide	3	60	0.2	2L4' T8 28w/ELEE LO	rlrb	3	42	0.1	0.1	197	3,640
IN	Interior	13	George Washington-Middle S	Stair By 210	s	4L4' T12 EE/EEMAG	trof acr	1	140	0.1	2L4' T8 28w/ELEE HI/RFL	rlrb rfl	1	64	0.1	0.1	277	3,640
IN	Interior	14	George Washington-Middle S	Office 206	2	4L4' T12 EE/EEMAG-8'	old wrap	2	140	0.3	2L4' T8 28w/ELEE HI/NEW-8'	new wrap	2	64	0.1	0.2	432	2,840
IN	Interior	15	George Washington-Middle S	Office 230 Sgi	2	4L4' T12 EE/EEMAG-8'	old wrap	2	140	0.3	2L4' T8 28w/ELEE HI/NEW-8'	new wrap	2	64	0.1	0.2	432	2,840
IN	Interior	16	George Washington-Middle S	Classroom 229	2	4L4' T12 EE/EEMAG-8'	old wrap	9	140	1.3	2L4' T8 28w/ELEE HI/NEW-8'	new wrap	9	64	0.6	0.7	1,943	2,840
IN	Interior	17	George Washington-Middle S	Classroom 229	2	2L4' T12 EE/EEMAG	old wrap	2	70	0.1	1L4' T8 28w/ELEE HI/NEW	new wrap	2	33	0.1	0.1	210	2,840
IN	Interior	18	George Washington-Middle S	Classroom 229	2	4L4' T12 EE/EEMAG-8'	old wrap	3	140	0.4	2L4' T8 28w/ELEE HI/NEW-8'	new wrap	3	64	0.2	0.2	648	2,840
IN	Interior	19	George Washington-Middle S	Office 227 Prep Room	2	4L4' T12 EE/EEMAG-8'	old wrap	4	140	0.6	2L4' T8 28w/ELEE HI/NEW-8'	new wrap	4	64	0.3	0.3	863	2,840
IN	Interior	20	George Washington-Middle S	Classroom 227	2	4L4' T12 EE/EEMAG-8'	old wrap	9	140	1.3	2L4' T8 28w/ELEE HI/NEW-8'	new wrap	9	64	0.6	0.7	1,943	2,840
IN	Interior	21	George Washington-Middle S	Classroom 227	2	2L4' T12 EE/EEMAG	old wrap	2	70	0.1	1L4' T8 28w/ELEE HI/NEW	new wrap	2	33	0.1	0.1	210	2,840
IN	Interior	22	George Washington-Middle S	Classroom 227	2	4L4' T12 EE/EEMAG-8'	old wrap	3	140	0.4	2L4' T8 28w/ELEE HI/NEW-8'	new wrap	3	64	0.2	0.2	648	2,840
IN	Interior	23	George Washington-Middle S	Storage 228	2	2L4' T12 EE/EEMAG-8'	strip	1	70	0.1	2L4' T8 28w/ELEE LO/STRIP KI	rlrb strip kit	1	42	0.0	0.0	14	500
IN	Interior	24	George Washington-Middle S	Classroom 226	2	3L4' T8 32w/EL	trof acr	12	88	1.1	2L4' T8 28w/ELEE HI/RFL	rlrb RT8 kit	12	64	0.8	0.3	818	2,840
IN	Interior	25	George Washington-Middle S	Classroom 225	2	4L4' T12 EE/EEMAG-8'	old wrap	9	140	1.3	2L4' T8 28w/ELEE HI/NEW-8'	new wrap	9	64	0.6	0.7	1,943	2,840
IN	Interior	26	George Washington-Middle S	Classroom 225	2	2L4' T12 EE/EEMAG	old wrap	2	70	0.1	1L4' T8 28w/ELEE HI/NEW	new wrap	2	33	0.1	0.1	210	2,840
IN	Interior	27	George Washington-Middle S	Classroom 225	2	4L4' T12 EE/EEMAG-8'	old wrap	3	140	0.4	2L4' T8 28w/ELEE HI/NEW-8'	new wrap	3	64	0.2	0.2	648	2,840
IN	Interior	28	George Washington-Middle S	Office 223	2	4L4' T12 EE/EEMAG-8'	old wrap	4	140	0.6	2L4' T8 28w/ELEE HI/NEW-8'	new wrap	4	64	0.3	0.3	863	2,840
IN	Interior	29	George Washington-Middle S	Classroom 223	2	4L4' T12 EE/EEMAG-8'	old wrap	9	140	1.3	2L4' T8 28w/ELEE HI/NEW-8'	new wrap	9	64	0.6	0.7	1,943	2,840
IN	Interior	30	George Washington-Middle S	Classroom 223	2	2L4' T12 EE/EEMAG	old wrap	2	70	0.1	1L4' T8 28w/ELEE HI/NEW	new wrap	2	33	0.1	0.1	210	2,840
IN	Interior	31	George Washington-Middle S	Classroom 223	2	4L4' T12 EE/EEMAG-8'	old wrap	3	140	0.4	2L4' T8 28w/ELEE HI/NEW-8'	new wrap	3	64	0.2	0.2	648	2,840
IN	Interior	32	George Washington-Middle S	Classroom 224	2	4L4' T12 EE/EEMAG-8'	old wrap	12	140	1.7	2L4' T8 28w/ELEE HI/NEW-8'	new wrap	12	64	0.8	0.9	2,590	2,840
IN	Interior	33	George Washington-Middle S	Classroom 224	2	100W INCANDESCENT	can rec 9"	3	100	0.3	21 WATT LED SI/LED21Par38/D	screw in led	3	21	0.1	0.2	673	2,840
IN	Interior	34	George Washington-Middle S	Classroom 215	2	4L4' T12 EE/EEMAG-8'	old wrap	6	140	0.8	2L4' T8 28w/ELEE HI/NEW-8'	new wrap	6	64	0.4	0.5	1,295	2,840
IN	Interior	35	George Washington-Middle S	Classroom 215	2	4L4' T12 EE/EEMAG-8'	old wrap	3	140	0.4	2L4' T8 28w/ELEE HI/NEW-8'	new wrap	3	64	0.2	0.2	648	2,840
IN	Interior	36	George Washington-Middle S	Classroom 216	2	4L4' T12 EE/EEMAG-8'	old wrap	6	140	0.8	2L4' T8 28w/ELEE HI/NEW-8'	new wrap	6	64	0.4	0.5	1,295	2,840
IN	Interior	37	George Washington-Middle S	Classroom 216	2	4L4' T12 EE/EEMAG-8'	old wrap	3	140	0.4	2L4' T8 28w/ELEE HI/NEW-8'	new wrap	3	64	0.2	0.2	648	2,840
IN	Interior	38	George Washington-Middle S	Classroom 221A	2	3L4' T12 EE/EEMAG	trof acrylic dbl swi	6	110	0.7	2L4' T8 28w/ELEE HI/RFL	rlrb RT8 kit	6	64	0.4	0.3	784	2,840
IN	Interior	39	George Washington-Middle S	Classroom 221B	2	3L4' T12 EE/EEMAG	trof acrylic dbl swi	6	110	0.7	2L4' T8 28w/ELEE HI/RFL	rlrb RT8 kit	6	64	0.4	0.3	784	2,840
IN	Interior	40	George Washington-Middle S	Classroom 210	2	3L4' T12 EE/EEMAG	trof acrylic dbl swi	12	110	1.3	2L4' T8 28w/ELEE HI/RFL	rlrb RT8 kit	12	64	0.8	0.6	1,568	2,840
IN	Interior	41	George Washington-Middle S	Classroom 219	2	3L4' T12 EE/EEMAG	trof acrylic dbl swi	12	110	1.3	2L4' T8 28w/ELEE HI/RFL	rlrb RT8 kit	12	64	0.8	0.6	1,568	2,840
IN	Interior	42	George Washington-Middle S	Classroom 218	2	3L4' T12 EE/EEMAG	trof acrylic dbl swi	12	110	1.3	2L4' T8 28w/ELEE HI/RFL	rlrb RT8 kit	12	64	0.8	0.6	1,568	2,840
IN	Interior	43	George Washington-Middle S	Classroom 217	2	3L4' T12 EE/EEMAG	trof acrylic dbl swi	12	110	1.3	2L4' T8 28w/ELEE HI/RFL	rlrb RT8 kit	12	64	0.8	0.6	1,568	2,840
IN	Interior	44	George Washington-Middle S	Bath Girls	2	3L4' T12 EE/EEMAG	trof acr	2	110	0.2	3L4' T8 28w/ELEE LO	rlrb	2	63	0.1	0.1	342	3,640
IN	Interior	45	George Washington-Middle S	Bath Boys	2	3L4' T12 EE/EEMAG	trof acr	2	110	0.2	3L4' T8 28w/ELEE LO	rlrb	2	63	0.1	0.1	342	3,640
IN	Interior	46	George Washington-Middle S	Closet 217	2	2L4' T12 EE/EEMAG	trof acr 1' wide	1	70	0.1	2L4' T8 28w/ELEE LO	rlrb	1	42	0.0	0.0	14	500
IN	Interior	47	George Washington-Middle S	Classroom 213	2	4L4' T12 EE/EEMAG-8'	old wrap	3	140	0.4	2L4' T8 28w/ELEE HI/NEW-8'	new wrap	3	64	0.2	0.2	648	2,840
IN	Interior	48	George Washington-Middle S	Classroom 213	2	4L4' T12 EE/EEMAG-8'	old wrap	6	140	0.8	2L4' T8 28w/ELEE HI/NEW-8'	new wrap	6	64	0.4	0.5	1,295	2,840

In or Out	ECM	Line	Building Name	Location	Fl	Pre Fixture Description	Pre Fixture Style	Pre Qty	Pre Watts	Pre kW	Post Fixture Description	Post Fixture Style	Post Qty	Post Watts	Post kW	kW Saved	kWH Saved	Annual Hours
IN	Interior	49	George Washington-Middle S	Classroom 214	2	4L4' T12 EE/EEMAG-8'	old wrap	3	140	0.4	2L4' T8 28w/ELEE HI/NEW-8'	new wrap	3	64	0.2	0.2	648	2,840
IN	Interior	50	George Washington-Middle S	Classroom 214	2	4L4' T12 EE/EEMAG-8'	old wrap	6	140	0.8	2L4' T8 28w/ELEE HI/NEW-8'	new wrap	6	64	0.4	0.5	1,295	2,840
IN	Interior	51	George Washington-Middle S	Classroom 212	2	6L4' T8 32w/EL-8'	indirect	9	180	1.6	6L4' T8 28w/ELEE LO-8'	rlrb	9	126	1.1	0.5	1,380	2,840
IN	Interior	52	George Washington-Middle S	Classroom 212	2	3L4' T8 32w/EL	indirect	3	88	0.3	3L4' T8 28w/ELEE LO	rlrb	3	63	0.2	0.1	213	2,840
IN	Interior	53	George Washington-Middle S	Classroom 211	2	6L4' T8 32w/EL-8'	indirect	9	180	1.6	6L4' T8 28w/ELEE LO-8'	rlrb	9	126	1.1	0.5	1,380	2,840
IN	Interior	54	George Washington-Middle S	Classroom 211	2	3L4' T8 32w/EL	indirect	3	88	0.3	3L4' T8 28w/ELEE LO	rlrb	3	63	0.2	0.1	213	2,840
IN	Interior	55	George Washington-Middle S	Bath Bt210	2	2L4' T8 32w/EL	trof acr	3	60	0.2	2L4' T8 28w/ELEE LO	rlrb	3	42	0.1	0.1	197	3,640
IN	Interior	56	George Washington-Middle S	Bath Mt210	2	60W INCANDESCENT	can rec 9"	1	60	0.1	11 WATT LED SI/LED10Par20/D	screw in led	1	11	0.0	0.0	178	3,640
IN	Interior	57	George Washington-Middle S	Bath Mt210	2	2L2' T8 17w/EL	vanity	1	33	0.0	2L2' T8 15w/ELEE LO/NEW	new vanity	1	24	0.0	0.0	33	3,640
IN	Interior	58	George Washington-Middle S	Classroom 209	2	4L4' T12 EE/EEMAG-8'	old wrap	12	140	1.7	2L4' T8 28w/ELEE HI/NEW-8'	new wrap	12	64	0.8	0.9	2,590	2,840
IN	Interior	59	George Washington-Middle S	Classroom 209	2	2L4' T12 EE/EEMAG	old wrap	2	70	0.1	1L4' T8 28w/ELEE HI/NEW	new wrap	2	33	0.1	0.1	210	2,840
IN	Interior	60	George Washington-Middle S	Closet 210	2	1L4' T12 EE/EEMAG	strip	1	40	0.0	1L4' T8 28w/ELEE LO/STRIP KI	rlrb strip kit	1	22	0.0	0.0	9	500
IN	Interior	61	George Washington-Middle S	Bath Bt210	2	2L4' T12 EE/EEMAG	trof acr	3	70	0.2	2L4' T8 28w/ELEE HI/RFL	rlrb rfl	3	64	0.2	0.0	66	3,640
IN	Interior	62	George Washington-Middle S	Bath Wt120	2	2L2' T8 17w/EL	vanity	1	33	0.0	2L2' T8 15w/ELEE LO/NEW	new vanity	1	24	0.0	0.0	33	3,640
IN	Interior	63	George Washington-Middle S	Bath Wt120	2	2L4' T12 U EE/EEMAG	trof acr	1	70	0.1	2L2' T8 15w/ELEE HI/RFL	rlrb rfl	1	33	0.0	0.0	135	3,640
IN	Interior	64	George Washington-Middle S	Classroom 208	2	4L4' T12 EE/EEMAG-8'	wrap	2	140	0.3	2L4' T8 28w/ELEE HI/NEW-8'	new wrap	2	64	0.1	0.2	432	2,840
IN	Interior	65	George Washington-Middle S	Classroom 208	2	2L4' T12 EE/EEMAG	wrap	2	70	0.1	1L4' T8 28w/ELEE HI/NEW	new wrap	2	33	0.1	0.1	210	2,840
IN	Interior	66	George Washington-Middle S	Classroom 207	2	4L4' T12 EE/EEMAG-8'	wrap	12	140	1.7	2L4' T8 28w/ELEE HI/NEW-8'	new wrap	12	64	0.8	0.9	2,590	2,840
IN	Interior	67	George Washington-Middle S	Classroom 207	2	2L4' T12 EE/EEMAG	wrap	2	70	0.1	1L4' T8 28w/ELEE HI/NEW	new wrap	2	33	0.1	0.1	210	2,840
IN	Interior	68	George Washington-Middle S	Closet 207As	2	1L4' T12 EE/EEMAG	strip	1	40	0.0	1L4' T8 28w/ELEE LO/STRIP KI	rlrb strip kit	1	22	0.0	0.0	9	500
IN	Interior	69	George Washington-Middle S	Office 205	2	4L4' T12 EE/EEMAG-8'	wrap	1	140	0.1	2L4' T8 28w/ELEE HI/NEW-8'	new wrap	1	64	0.1	0.1	216	2,840
IN	Interior	70	George Washington-Middle S	Office 205	2	2L4' T12 EE/EEMAG	wrap	1	70	0.1	1L4' T8 28w/ELEE HI/NEW	new wrap	1	33	0.0	0.0	105	2,840
IN	Interior	71	George Washington-Middle S	Hall 2A	2	6L2' T12 STD/STD	trof opaque	11	168	1.8	6L2' T8 15w/ELEE LO	rlrb rfl	11	78	0.9	1.0	3,604	3,640
IN	Interior	72	George Washington-Middle S	Hall 2B	2	6L2' T12 STD/STD	trof opaque	10	168	1.7	6L2' T8 15w/ELEE LO	rlrb rfl	10	78	0.8	0.9	3,276	3,640
IN	Interior	73	George Washington-Middle S	Hall 2D	2	6L2' T12 STD/STD	trof opaque	11	168	1.8	6L2' T8 15w/ELEE LO	rlrb rfl	11	78	0.9	1.0	3,604	3,640
IN	Interior	74	George Washington-Middle S	Hall 2E	2	4L4' T12 EE/EEMAG	trof acr	2	140	0.3	2L4' T8 28w/ELEE HI/RFL	rlrb rfl	2	64	0.1	0.2	553	3,640
IN	Interior	75	George Washington-Middle S	Hall 2E	2	3L4' T12 EE/EEMAG	trof acr	3	110	0.3	3L4' T8 28w/ELEE LO	rlrb	3	63	0.2	0.1	513	3,640
IN	Interior	76	George Washington-Middle S	Stair South	s	2L4' T12 EE/EEMAG	old wrap	6	70	0.4	1L4' T8 28w/ELEE HI/NEW	new wrap	6	33	0.2	0.2	808	3,640
IN	Interior	77	George Washington-Middle S	Hall 2G	2	2L4' T12 EE/EEMAG	trof acr 1' wide	26	70	1.8	2L4' T8 28w/ELEE LO	rlrb sockets	26	42	1.1	0.7	2,650	3,640
IN	Interior	78	George Washington-Middle S	Stair 2G	s	2L4' T12 EE/EEMAG	old wrap	6	70	0.4	1L4' T8 28w/ELEE HI/NEW	new wrap	6	33	0.2	0.2	808	3,640
IN	Interior	79	George Washington-Middle S	Hall 2F	2	3L4' T8 32w/EL	trof acr	2	88	0.2	3L4' T8 28w/ELEE LO	rlrb	2	63	0.1	0.1	182	3,640
IN	Interior	80	George Washington-Middle S	Hall 2F	2	3L4' T8 32w/EL	trof acr	3	88	0.3	3L4' T8 28w/ELEE LO	rlrb	3	63	0.2	0.1	273	3,640
IN	Interior	81	George Washington-Middle S	Hall 2C	2	6L2' T12 STD/STD	trof opaque	10	168	1.7	6L2' T8 15w/ELEE LO	rlrb rfl	10	78	0.8	0.9	3,276	3,640
IN	Interior	82	George Washington-Middle S	Office 136 Maintenance	1	2L4' T12 EE/EEMAG-8'	old strip	4	70	0.3	2L4' T8 28w/ELEE LO/STRIP KI	rlrb strip kit	4	42	0.2	0.1	318	2,840
IN	Interior	83	George Washington-Middle S	Office 136 Maintenance	1	1L4' T12 EE/EEMAG	old strip	1	40	0.0	1L4' T8 28w/ELEE LO/STRIP KI	rlrb strip kit	1	22	0.0	0.0	51	2,840
IN	Interior	84	George Washington-Middle S	Bath 136 Maintenance	1	40W INCANDESCENT	can rec 9"	1	40	0.0	11 WATT LED SI/LED10Par20/D	screw in led	1	11	0.0	0.0	106	3,640
IN	Interior	85	George Washington-Middle S	Closet 136 Maintenance	1	150W INCANDESCENT	keyless	1	150	0.2	2L2' T8 15w/ELEE LO/NEW	new wrap	1	24	0.0	0.1	63	500
IN	Interior	86	George Washington-Middle S	Mechanical 135 Boiler Room	1	2L4' T8 32w/EL	wrap	1	60	0.1	2L4' T8 28w/ELEE LO/NEW	new industrial	1	42	0.0	0.0	9	500
IN	Interior	87	George Washington-Middle S	Mechanical 135 Boiler Room	1	2L4' F48 T12 HO EE/STD	industrial	8	135	1.1	2L4' T8 28w/ELEE LO/NEW	new industrial	8	42	0.3	0.7	372	500
IN	Interior	88	George Washington-Middle S	Cafeteria 134 East Hall Seating A	1	4L4' T12 EE/EEMAG	trof acr	30	140	4.2	2L4' T8 28w/ELEE HI/RFL	rlrb RT8 kit	30	64	1.9	2.3	7,843	3,440
IN	Interior	89	George Washington-Middle S	Cafeteria 134 East Hall Seating A	1	2L4' T12 U EE/EEMAG	trof acr	1	70	0.1	2L2' T8 15w/ELEE HI/RFL	rlrb RT8 kit	1	33	0.0	0.0	127	3,440
IN	Interior	90	George Washington-Middle S	Cafeteria 134 East Hall Seating A	1	40W INCANDESCENT	aisle	2	40	0.1	3 WATT LED/KIT	aislelight retro kit	2	3	0.0	0.1	255	3,440
IN	Interior	91	George Washington-Middle S	Cafeteria 134 East Hall Seating A	1	100W METAL HALIDE	can rec 12"	1	120	0.1	22 WATT LED/KIT	Spectrum Lighting can re	1	22	0.0	0.1	337	3,440
IN	Interior	92	George Washington-Middle S	Kitchen 133	1	4L4' T12 EE/EEMAG-8'	old wrap	15	140	2.1	4L4' T8 28w/ELEE LO/NEW-8'	new wrap	15	83	1.2	0.9	2,428	2,840
IN	Interior	93	George Washington-Middle S	Kitchen 133	1	2L4' T12 EE/EEMAG	old wrap	6	70	0.4	2L4' T8 28w/ELEE LO/NEW	new wrap	6	42	0.3	0.2	477	2,840
IN	Interior	94	George Washington-Middle S	Kitchen Grease Hood	1	2L4' T12 EE/EEMAG	trof opaque 1' wid	3	70	0.2	2L4' T8 28w/ELEE LO	rlrb	3	42	0.1	0.1	239	2,840
IN	Interior	95	George Washington-Middle S	Hall By Cooler	1	2L4' T12 EE/EEMAG-8'	old wrap narrow	1	70	0.1	2L4' T8 28w/ELEE HI/NEW-8'	new wrap	1	64	0.1	0.0	22	3,640
IN	Interior	96	George Washington-Middle S	Hall By Cooler	1	2L4' T8 32w/EL	old wrap narrow	1	60	0.1	1L4' T8 28w/ELEE HI/NEW	new wrap	1	33	0.0	0.0	98	3,640

In or Out	ECM	Line	Building Name	Location	Fl	Pre Fixture Description	Pre Fixture Style	Pre Qty	Pre Watts	Pre kW	Post Fixture Description	Post Fixture Style	Post Qty	Post Watts	Post kW	kW Saved	kWH Saved	Annual Hours
IN	Interior	97	George Washington-Middle S	Closet 133As	1	100W INCANDESCENT	keyless	1	100	0.1	2L2' T8 15w/ELEE LO/NEW	new wrap	1	24	0.0	0.1	38	500
IN	Interior	98	George Washington-Middle S	Bath 133Tr	1	2L4' T8 32w/EL	wrap	1	60	0.1	1L4' T8 28w/ELEE HI/NEW	new wrap	1	33	0.0	0.0	98	3,640
IN	Interior	99	George Washington-Middle S	Bath 133Tr	1	2L2' T8 17w/EL	vanity	1	33	0.0	2L2' T8 15w/ELEE LO/NEW	new vanity	1	24	0.0	0.0	33	3,640
IN	Interior	100	George Washington-Middle S	Office 133Bs	1	2L4' T8 32w/EL	wrap	4	60	0.2	1L4' T8 28w/ELEE HI/NEW	new wrap	4	33	0.1	0.1	307	2,840
IN	Interior	101	George Washington-Middle S	Storage 133Cs Dry Goods	1	2L4' T8 32w/EL	wrap	2	60	0.1	1L4' T8 28w/ELEE HI/NEW	new wrap	2	33	0.1	0.1	132	2,440
IN	Interior	102	George Washington-Middle S	Cafeteria 134 East Hall Seating A	1	4L4' T12 EE/EEMAG	trof acr	24	140	3.4	2L4' T8 28w/ELEE HI/RFL	rlrb RT8 kit	24	64	1.5	1.8	6,275	3,440
IN	Interior	103	George Washington-Middle S	Cafeteria 134 East Hall Seating A	1	4L4' T8 32w/EL	trof acr	8	112	0.9	2L4' T8 28w/ELEE HI/RFL	rlrb RT8 kit	8	64	0.5	0.4	1,321	3,440
IN	Interior	104	George Washington-Middle S	Cafeteria 134 East Hall Seating A	1	40W INCANDESCENT	aisle	2	40	0.1	3 WATT LED/KIT	aislelight retro kit	2	3	0.0	0.1	255	3,440
IN	Interior	105	George Washington-Middle S	Cafeteria 132	1	4L4' T12 EE/EEMAG	trof acr	8	140	1.1	2L4' T8 28w/ELEE HI/RFL	rlrb RT8 kit	8	64	0.5	0.6	2,092	3,440
IN	Interior	106	George Washington-Middle S	Classroom 131	1	4L4' T12 EE/EEMAG-8'	wrap	6	140	0.8	2L4' T8 28w/ELEE HI/NEW	new trof acr	6	64	0.4	0.5	1,295	2,840
IN	Interior	107	George Washington-Middle S	Mechanical 122 Electrical	1	2L4' T12 EE/EEMAG	wrap	1	70	0.1	1L4' T8 28w/ELEE HI/NEW	new wrap	1	33	0.0	0.0	19	500
IN	Interior	108	George Washington-Middle S	Bath Bt121 Boys	1	3L4' T12 EE/EEMAG	trof acr	2	110	0.2	3L4' T8 28w/ELEE LO	rlrb	2	63	0.1	0.1	342	3,640
IN	Interior	109	George Washington-Middle S	Bath Gt121	1	3L4' T12 EE/EEMAG	trof acr	2	110	0.2	3L4' T8 28w/ELEE LO	rlrb	2	63	0.1	0.1	342	3,640
IN	Interior	110	George Washington-Middle S	Classroom 120	1	3L4' T12 EE/EEMAG	trof acrylic dbl swi	12	110	1.3	2L4' T8 28w/ELEE HI/RFL	rlrb RT8 kit	12	64	0.8	0.6	1,568	2,840
IN	Interior	111	George Washington-Middle S	Classroom 119	1	3L4' T12 EE/EEMAG	trof acrylic dbl swi	12	110	1.3	2L4' T8 28w/ELEE HI/RFL	rlrb RT8 kit	12	64	0.8	0.6	1,568	2,840
IN	Interior	112	George Washington-Middle S	Classroom 118	1	3L4' T12 EE/EEMAG	trof acrylic dbl swi	12	110	1.3	2L4' T8 28w/ELEE HI/RFL	rlrb RT8 kit	12	64	0.8	0.6	1,568	2,840
IN	Interior	113	George Washington-Middle S	Classroom 117	1	3L4' T12 EE/EEMAG	trof acrylic dbl swi	12	110	1.3	2L4' T8 28w/ELEE HI/RFL	rlrb RT8 kit	12	64	0.8	0.6	1,568	2,840
IN	Interior	114	George Washington-Middle S	Classroom 116B	1	3L4' T12 EE/EEMAG	trof acrylic dbl swi	6	110	0.7	2L4' T8 28w/ELEE HI/RFL	rlrb RT8 kit	6	64	0.4	0.3	784	2,840
IN	Interior	115	George Washington-Middle S	Classroom 116A	1	3L4' T12 EE/EEMAG	trof acrylic dbl swi	6	110	0.7	2L4' T8 28w/ELEE HI/RFL	rlrb RT8 kit	6	64	0.4	0.3	784	2,840
IN	Interior	116	George Washington-Middle S	Classroom 126	1	4L4' T12 EE/EEMAG-8'	wrap	7	140	1.0	2L4' T8 28w/ELEE HI/NEW-8'	new wrap	7	64	0.4	0.5	1,511	2,840
IN	Interior	117	George Washington-Middle S	Classroom 126	1	2L4' T12 EE/EEMAG	wrap	2	70	0.1	1L4' T8 28w/ELEE HI/NEW	new wrap	2	33	0.1	0.1	210	2,840
IN	Interior	118	George Washington-Middle S	Classroom 125	1	4L4' T12 EE/EEMAG-8'	wrap	9	140	1.3	2L4' T8 28w/ELEE HI/NEW-8'	new wrap	9	64	0.6	0.7	1,943	2,840
IN	Interior	119	George Washington-Middle S	Classroom 124	1	4L4' T12 EE/EEMAG-8'	wrap	7	140	1.0	2L4' T8 28w/ELEE HI/NEW-8'	new wrap	7	64	0.4	0.5	1,511	2,840
IN	Interior	120	George Washington-Middle S	Classroom 124	1	2L4' T12 EE/EEMAG	wrap	2	70	0.1	1L4' T8 28w/ELEE HI/NEW	new wrap	2	33	0.1	0.1	210	2,840
IN	Interior	121	George Washington-Middle S	Classroom 123	1	4L4' T12 EE/EEMAG-8'	wrap	9	140	1.3	2L4' T8 28w/ELEE HI/NEW-8'	new wrap	9	64	0.6	0.7	1,943	2,840
IN	Interior	122	George Washington-Middle S	Bath Mt127	1	23W COMPACT HARDWI	trof opaque 6"	4	24	0.1	NO RETRO	no change needed		24	0.1			3,640
IN	Interior	123	George Washington-Middle S	Bath Mt127	1	2L4' T8 U/EL	trof acr	1	60	0.1	2L2' T8 15w/ELEE HI/RFL	rlrb rfl	1	33	0.0	0.0	98	3,640
IN	Interior	124	George Washington-Middle S	Bath Mt127	1	2L2' T8 17w/EL	vanity	1	33	0.0	2L2' T8 15w/ELEE LO/NEW	new vanity	1	24	0.0	0.0	33	3,640
IN	Interior	125	George Washington-Middle S	Closet Cc127	1	100W INCANDESCENT	keyless	1	100	0.1	23W COMPACT SI/29712/CF23	screw in	1	23	0.0	0.1	39	500
IN	Interior	126	George Washington-Middle S	Bath Wt127	1	23W COMPACT HARDWI	trof opaque 6"	4	24	0.1	NO RETRO	no change needed		24	0.1			3,640
IN	Interior	127	George Washington-Middle S	Bath Wt127	1	2L4' T8 U/EL	trof acr	1	60	0.1	2L2' T8 15w/ELEE HI/RFL	rlrb rfl	1	33	0.0	0.0	98	3,640
IN	Interior	128	George Washington-Middle S	Bath Wt127	1	2L2' T8 17w/EL	vanity	1	33	0.0	2L2' T8 15w/ELEE LO/NEW	new vanity	1	24	0.0	0.0	33	3,640
IN	Interior	129	George Washington-Middle S	Classroom 127	1	4L4' T12 EE/EEMAG-8'	wrap wide	9	140	1.3	2L4' T8 28w/ELEE HI/NEW-8'	new wrap	9	64	0.6	0.7	1,943	2,840
IN	Interior	130	George Washington-Middle S	Classroom 127	1	100W INCANDESCENT	can rec 12"	2	100	0.2	21 WATT LED SI/LED21Par38/D	screw in led	2	21	0.0	0.2	449	2,840
IN	Interior	131	George Washington-Middle S	Gym Main	1	400W METAL HALIDE	high bay	36	455	16.4	172 WATT LED/NEW	new LED hibay polylens	36	172	6.2	10.2	35,047	3,440
IN	Interior	132	George Washington-Middle S	Locker 114 Girls	1	3L4' T8 32w/EL	box acrylic	1	88	0.1	3L4' T8 28w/ELEE LO	rlrb	1	63	0.1	0.0	91	3,640
IN	Interior	133	George Washington-Middle S	Locker 114 Girls	1	2L4' T12 EE/EEMAG-8'	old wrap narrow	10	70	0.7	2L4' T8 28w/ELEE LO/NEW-8'	new wrap	10	42	0.4	0.3	1,019	3,640
IN	Interior	134	George Washington-Middle S	Locker 114 Girls	1	2x60W INCANDESCENTS	old drum	5	120	0.6	2L4' T8 28w/ELEE LO/NEW	new vaportight	5	42	0.2	0.4	1,420	3,640
IN	Interior	135	George Washington-Middle S	Office 114Ao	1	4L4' T12 EE/EEMAG-8'	wrap	1	140	0.1	2L4' T8 28w/ELEE HI/NEW-8'	new wrap	1	64	0.1	0.1	216	2,840
IN	Interior	136	George Washington-Middle S	Bath 114Ao	1	2L2' T12 STD/STD	vanity	1	56	0.1	2L2' T8 15w/ELEE LO/NEW	new vanity	1	24	0.0	0.0	116	3,640
IN	Interior	137	George Washington-Middle S	Bath 114Ao	1	60W INCANDESCENT	can rec 6"	1	60	0.1	11 WATT LED SI/LED10Par20/D	screw in led	1	11	0.0	0.0	178	3,640
IN	Interior	138	George Washington-Middle S	Closet 114As	1	2L4' T12 EE/EEMAG	old wrap	1	70	0.1	1L4' T8 28w/ELEE HI/NEW	new wrap	1	33	0.0	0.0	19	500
IN	Interior	139	George Washington-Middle S	Bath Gt114	1	2L4' T8 32w/EL	trof acr	1	60	0.1	2L4' T8 28w/ELEE LO	rlrb	1	42	0.0	0.0	66	3,640
IN	Interior	140	George Washington-Middle S	Bath Gt114	1	2L2' T12 STD/STD	vanity	1	56	0.1	2L2' T8 15w/ELEE LO/NEW	new vanity	1	24	0.0	0.0	116	3,640
IN	Interior	141	George Washington-Middle S	Closet Gt114	1	1L4' T12 EE/EEMAG	old strip	2	40	0.1	1L4' T8 28w/ELEE LO/STRIP KI	rlrb strip kit	2	22	0.0	0.0	18	500
IN	Interior	142	George Washington-Middle S	Closet Gt114	1	2L4' T12 EE/EEMAG-8'	old strip	1	70	0.1	2L4' T8 28w/ELEE LO/STRIP KI	rlrb strip kit	1	42	0.0	0.0	14	500
IN	Interior	143	George Washington-Middle S	Hall 114 Girls	1	3L4' T12 EE/EEMAG	box acrylic	1	110	0.1	3L4' T8 28w/ELEE LO	rlrb	1	63	0.1	0.0	171	3,640
IN	Interior	144	George Washington-Middle S	Gym 115 Aux	1	2L4' T8 32w/EL	box acr 1' wide	36	60	2.2	2L4' T8 28w/ELEE LO	rlrb	36	42	1.5	0.6	2,229	3,440

In or Out	ECM	Line	Building Name	Location	Fl	Pre Fixture Description	Pre Fixture Style	Pre Qty	Pre Watts	Pre kW	Post Fixture Description	Post Fixture Style	Post Qty	Post Watts	Post kW	kW Saved	kWH Saved	Annual Hours
IN	Interior	145	George Washington-Middle S	Gym 115 Aux	1	100W INCANDESCENT	can rec 9"	1	100	0.1	21 WATT LED SI/LED21Par38/D	screw in led	1	21	0.0	0.1	272	3,440
IN	Interior	146	George Washington-Middle S	Closet 113As	1	2L4' T12 EE/EEMAG	wrap	4	70	0.3	1L4' T8 28w/ELEE HI/NEW	new wrap	4	33	0.1	0.1	74	500
IN	Interior	147	George Washington-Middle S	Closet 113Bs	1	2L4' T12 EE/EEMAG-8'	old strip	1	70	0.1	2L4' T8 28w/ELEE LO/STRIP KI	rlrb strip kit	1	42	0.0	0.0	14	500
IN	Interior	148	George Washington-Middle S	Bath Bt113 Boys	1	2L4' T8 32w/EL	trof acr	3	60	0.2	2L4' T8 28w/ELEE LO	rlrb	3	42	0.1	0.1	197	3,640
IN	Interior	149	George Washington-Middle S	Mechanical Mr113	1	2L4' T12 EE/EEMAG-8'	old strip	1	70	0.1	2L4' T8 28w/ELEE LO/STRIP KI	rlrb strip kit	1	42	0.0	0.0	14	500
IN	Interior	150	George Washington-Middle S	Bath Gt113	1	2L4' T8 32w/EL	trof acr	3	60	0.2	2L4' T8 28w/ELEE LO	rlrb	3	42	0.1	0.1	197	3,640
IN	Interior	151	George Washington-Middle S	Bath Gt113	1	2L2' T12 STD/STD	vanity	3	56	0.2	2L2' T8 15w/ELEE LO/NEW	new vanity	3	24	0.1	0.1	349	3,640
IN	Interior	152	George Washington-Middle S	Storage 113Cs	1	2L4' T12 EE/EEMAG	wrap	4	70	0.3	1L4' T8 28w/ELEE HI/NEW	new wrap	4	33	0.1	0.1	74	500
IN	Interior	153	George Washington-Middle S	Locker 111 Boys	1	2L4' T12 EE/EEMAG-8'	old wrap	3	70	0.2	2L4' T8 28w/ELEE HI/NEW-8'	new wrap	3	64	0.2	0.0	66	3,640
IN	Interior	154	George Washington-Middle S	Locker 111 Boys	1	2L4' T12 EE/EEMAG	old wrap	1	70	0.1	1L4' T8 28w/ELEE HI/NEW	new wrap	1	33	0.0	0.0	135	3,640
IN	Interior	155	George Washington-Middle S	Bath 111 Boys	1	2L4' T12 EE/EEMAG	old wrap	1	70	0.1	1L4' T8 28w/ELEE HI/NEW	new wrap	1	33	0.0	0.0	135	3,640
IN	Interior	156	George Washington-Middle S	Closet 111As	1	2L4' T12 EE/EEMAG-8'	old wrap	1	70	0.1	2L4' T8 28w/ELEE HI/NEW-8'	new wrap	1	64	0.1	0.0	3	500
IN	Interior	157	George Washington-Middle S	Closet 111As	1	2L8' T12 HO STD/EL	old vapor tight	5	195	1.0	2L4' T8 28w/ELEE HI/NEW-8'	new wrap	5	64	0.3	0.7	328	500
IN	Interior	158	George Washington-Middle S	Closet 111As	1	100W INCANDESCENT	jar cage	6	100	0.6	2L4' T8 28w/ELEE LO/NEW	new vaportight	6	42	0.3	0.3	174	500
IN	Interior	159	George Washington-Middle S	Office 111Ao	1	4L4' T12 EE/EEMAG-8'	old wrap	2	140	0.3	2L4' T8 28w/ELEE HI/NEW-8'	new wrap	2	64	0.1	0.2	432	2,840
IN	Interior	160	George Washington-Middle S	Bath 111Ao	1	2L2' T12 STD/STD	vanity	1	56	0.1	2L2' T8 15w/ELEE LO/NEW	new vanity	1	24	0.0	0.0	116	3,640
IN	Interior	161	George Washington-Middle S	Bath 111Ao	1	60W INCANDESCENT	can rec 6"	1	60	0.1	11 WATT LED SI/LED10Par20/D	screw in led	1	11	0.0	0.0	178	3,640
IN	Interior	162	George Washington-Middle S	Closet 111Bs	1	2x100W INCANDESCENT	old drum	4	200	0.8	1L4' T8 28w/ELEE HI/NEW	new wrap	4	33	0.1	0.7	334	500
IN	Interior	163	George Washington-Middle S	Gym 112 Aux	1	2L4' T12 EE/EEMAG	box acr 1' wide	32	70	2.2	2L4' T8 28w/ELEE LO	rlrb	32	42	1.3	0.9	3,082	3,440
IN	Interior	164	George Washington-Middle S	Gym 112 Aux	1	100W INCANDESCENT	square surface mt	2	100	0.2	23W COMPACT SI/29712/CF23	screw in	2	23	0.0	0.2	530	3,440
IN	Interior	165	George Washington-Middle S	Closet 112As	1	2L4' T8 32w/EL	wrap	1	60	0.1	1L4' T8 28w/ELEE HI/NEW	new wrap	1	33	0.0	0.0	14	500
IN	Interior	166	George Washington-Middle S	Hall 110 Music	1	1L4' T8 32w/EL	old wrap	1	30	0.0	1L4' T8 28w/ELEE HI/NEW	new wrap	1	33	0.0	0.0	-11	3,640
IN	Interior	167	George Washington-Middle S	Classroom 110 Music	1	4L4' T8 32w/EL-8'	wrap wide	12	112	1.3	4L4' T8 28w/ELEE LO-8'	rlrb	12	83	1.0	0.3	988	2,840
IN	Interior	168	George Washington-Middle S	Office 110Ap	1	4L4' T12 EE/EEMAG	old box acrylic	1	140	0.1	2L4' T8 28w/ELEE HI/NEW	new wrap wide	1	64	0.1	0.1	216	2,840
IN	Interior	169	George Washington-Middle S	Office 110Bp	1	4L4' T12 EE/EEMAG	old box acrylic	1	140	0.1	2L4' T8 28w/ELEE HI/NEW	new wrap wide	1	64	0.1	0.1	216	2,840
IN	Interior	170	George Washington-Middle S	Office 110Cp	1	4L4' T12 EE/EEMAG	old box acrylic	1	140	0.1	2L4' T8 28w/ELEE HI/NEW	new wrap wide	1	64	0.1	0.1	216	2,840
IN	Interior	171	George Washington-Middle S	Storage Instruments	1	100W INCANDESCENT	keyless	1	100	0.1	23W COMPACT SI/29712/CF23	screw in	1	23	0.0	0.1	39	500
IN	Interior	172	George Washington-Middle S	Classroom 109 Music	1	4L4' T12 EE/EEMAG-8'	wrap wide	12	140	1.7	2L4' T8 28w/ELEE HI/NEW-8'	new wrap	12	64	0.8	0.9	2,590	2,840
IN	Interior	173	George Washington-Middle S	Hall 109 Music	1	2L4' T12 EE/EEMAG-8'	old wrap	2	70	0.1	2L4' T8 28w/ELEE HI/NEW-8'	new wrap	2	64	0.1	0.0	44	3,640
IN	Interior	174	George Washington-Middle S	Office Ao109	1	4L4' T12 EE/EEMAG-8'	old wrap wide	3	140	0.4	2L4' T8 28w/ELEE HI/NEW-8'	new wrap	3	64	0.2	0.2	648	2,840
IN	Interior	175	George Washington-Middle S	Storage As108	1	2L4' T12 EE/EEMAG	wrap	4	70	0.3	1L4' T8 28w/ELEE HI/NEW	new wrap	4	33	0.1	0.1	74	500
IN	Interior	176	George Washington-Middle S	Storage Storeroom	1	2L4' T12 EE/EEMAG	wrap	2	70	0.1	1L4' T8 28w/ELEE HI/NEW	new wrap	2	33	0.1	0.1	37	500
IN	Interior	177	George Washington-Middle S	Classroom 108	1	3L4' T8 32w/EL	trof parabolic	8	88	0.7	2L4' T8 28w/ELEE HI/RFL	rlrb RT8 kit	8	64	0.5	0.2	382	1,988
IN	Interior	178	George Washington-Middle S	Classroom 108	1	3L2' F40 BIAX/EL	trof parabolic	1	102	0.1	2L2' T8 15w/ELEE HI/RFL	rlrb RT8 kit	1	33	0.0	0.1	137	1,988
IN	Interior	179	George Washington-Middle S	Classroom 107	1	3L4' T8 32w/EL	trof parabolic	8	88	0.7	2L4' T8 28w/ELEE HI/RFL	rlrb RT8 kit	8	64	0.5	0.2	382	1,988
IN	Interior	180	George Washington-Middle S	Classroom 107	1	3L2' F40 BIAX/EL	trof parabolic	1	102	0.1	2L2' T8 15w/ELEE HI/RFL	rlrb RT8 kit	1	33	0.0	0.1	137	1,988
IN	Interior	181	George Washington-Middle S	Classroom 106	1	3L4' T8 32w/EL	trof parabolic	13	88	1.1	2L4' T8 28w/ELEE HI/RFL	rlrb RT8 kit	13	64	0.8	0.3	620	1,988
IN	Interior	182	George Washington-Middle S	Classroom 106	1	3L2' F40 BIAX/EL	trof parabolic	1	102	0.1	2L2' T8 15w/ELEE HI/RFL	rlrb RT8 kit	1	33	0.0	0.1	137	1,988
IN	Interior	183	George Washington-Middle S	Closet Bs106	1	2L4' T8 32w/EL	wrap	4	60	0.2	1L4' T8 28w/ELEE HI/NEW	new wrap	4	33	0.1	0.1	54	500
IN	Interior	184	George Washington-Middle S	Classroom 105 Wood Shop	1	2L4' T8 32w/EL	wrap	50	60	3.0	1L4' T8 28w/ELEE HI/NEW	new wrap	50	33	1.7	1.4	3,834	2,840
IN	Interior	185	George Washington-Middle S	Stage	1	150W METAL HALIDE	high bay	6	190	1.1	2L4' T8 28w/ELEE/NEW	new wrap	6	48	0.3	0.9	2,760	3,240
IN	Interior	186	George Washington-Middle S	Stage	1	72W COMPACT SCREWIN	decorative	4	72	0.3	NO RETRO	no change needed		72	0.3			3,240
IN	Interior	187	George Washington-Middle S	Auditorium Seating Area	1	4L4' T12 EE/EEMAG	trof acr	15	140	2.1	2L4' T8 28w/ELEE HI/RFL	rlrb RT8 kit	15	64	1.0	1.1	3,694	3,240
IN	Interior	188	George Washington-Middle S	Auditorium Seating Area	1	32W COMPACT SCREWIN	can rec 12"	4	32	0.1	NO RETRO	no change needed		32	0.1			3,240
IN	Interior	189	George Washington-Middle S	Auditorium Seating Area	1	32W COMPACT SCREWIN	can rec 9"	2	32	0.1	NO RETRO	no change needed		32	0.1			3,240
IN	Interior	190	George Washington-Middle S	Auditorium Seating Area	1	40W INCANDESCENT	aisle	2	40	0.1	3 WATT LED/KIT	aislelight retro kit	2	3	0.0	0.1	240	3,240
IN	Interior	191	George Washington-Middle S	Storage Av Equipment	1	2L4' T8 32w/EL	wrap	2	60	0.1	1L4' T8 28w/ELEE HI/NEW	new wrap	2	33	0.1	0.1	27	500
IN	Interior	192	George Washington-Middle S	Storage Equipment	1	2L4' T8 32w/EL	wrap	2	60	0.1	1L4' T8 28w/ELEE HI/NEW	new wrap	2	33	0.1	0.1	27	500

In or Out	ECM	Line	Building Name	Location	Fl	Pre Fixture Description	Pre Fixture Style	Pre Qty	Pre Watts	Pre kW	Post Fixture Description	Post Fixture Style	Post Qty	Post Watts	Post kW	kW Saved	kWH Saved	Annual Hours
IN	Interior	193	George Washington-Middle S	Auditorium Sound Booth	1	100W INCANDESCENT	can dim rec	2	100	0.2	21 WATT LED SI/LED21Par38/D	screw in led	2	21	0.0	0.2	512	3,240
IN	Interior	194	George Washington-Middle S	Closet Sound Booth	1	100W INCANDESCENT	keyless	1	100	0.1	23W COMPACT SI/29712/CF23	screw in	1	23	0.0	0.1	39	500
IN	Interior	195	George Washington-Middle S	Mechanical 103	1	1L4' T12 EE/EEMAG	strip	1	40	0.0	1L4' T8 28w/ELEE LO/STRIP KI	rlrb strip kit	1	22	0.0	0.0	9	500
IN	Interior	196	George Washington-Middle S	Office 102 Nurse	1	4L4' T12 EE/EEMAG	old box acrylic	2	140	0.3	2L4' T8 28w/ELEE HI/NEW	new wrap wide	2	64	0.1	0.2	432	2,840
IN	Interior	197	George Washington-Middle S	Office 102Jo	1	4L4' T12 EE/EEMAG	old box acrylic	2	140	0.3	2L4' T8 28w/ELEE HI/NEW	new wrap wide	2	64	0.1	0.2	432	2,840
IN	Interior	198	George Washington-Middle S	Office Open Nurse	1	4L4' T12 EE/EEMAG	old box acrylic	6	140	0.8	2L4' T8 28w/ELEE HI/NEW	new wrap wide	6	64	0.4	0.5	1,569	3,440
IN	Interior	199	George Washington-Middle S	Office Open Nurse	1	2x13W COMPACT HARDV	drum	2	30	0.1	NO RETRO	no change needed		30	0.1			3,440
IN	Interior	200	George Washington-Middle S	Bath 102Tr	1	2x13W COMPACT HARDV	drum	1	30	0.0	NO RETRO	no change needed		30	0.0			3,640
IN	Interior	201	George Washington-Middle S	Office 101Io	1	4L4' T12 EE/EEMAG	old box acrylic	2	140	0.3	2L4' T8 28w/ELEE HI/NEW	new wrap wide	2	64	0.1	0.2	432	2,840
IN	Interior	202	George Washington-Middle S	Office 101Fo	1	4L4' T12 EE/EEMAG	old box acrylic	4	140	0.6	2L4' T8 28w/ELEE HI/NEW	new wrap wide	4	64	0.3	0.3	863	2,840
IN	Interior	203	George Washington-Middle S	Office 101Ho	1	4L4' T12 EE/EEMAG	old box acrylic	2	140	0.3	2L4' T8 28w/ELEE HI/NEW	new wrap wide	2	64	0.1	0.2	432	2,840
IN	Interior	204	George Washington-Middle S	Office 101Eo	1	4L4' T8 32w/EL	trof acr	4	112	0.4	2L4' T8 28w/ELEE HI/RFL	rlrb rfl	4	64	0.3	0.2	545	2,840
IN	Interior	205	George Washington-Middle S	Office 101Go	1	4L4' T12 EE/EEMAG	old box acrylic	2	140	0.3	2L4' T8 28w/ELEE HI/NEW	new wrap wide	2	64	0.1	0.2	432	2,840
IN	Interior	206	George Washington-Middle S	Office 101Do	1	4L4' T12 EE/EEMAG	old box acrylic	2	140	0.3	2L4' T8 28w/ELEE HI/NEW	new wrap wide	2	64	0.1	0.2	432	2,840
IN	Interior	207	George Washington-Middle S	Hall 101Fo To 101Do	1	2L4' T8 32w/EL	wrap	3	60	0.2	1L4' T8 28w/ELEE HI/NEW	new wrap	3	33	0.1	0.1	295	3,640
IN	Interior	208	George Washington-Middle S	Office Main	1	4L4' T12 EE/EEMAG	old box acrylic	12	140	1.7	2L4' T8 28w/ELEE HI/NEW	new wrap wide	12	64	0.8	0.9	2,590	2,840
IN	Interior	209	George Washington-Middle S	Storage 101Co	1	4L4' T8 32w/EL	trof acr	2	112	0.2	2L4' T8 28w/ELEE HI/RFL	rlrb rfl	2	64	0.1	0.1	234	2,440
IN	Interior	210	George Washington-Middle S	Conference 101Bo	1	4L4' T12 EE/EEMAG	old box acrylic	4	140	0.6	2L4' T8 28w/ELEE HI/NEW	new wrap wide	4	64	0.3	0.3	863	2,840
IN	Interior	211	George Washington-Middle S	Office 101Ao	1	4L4' T12 EE/EEMAG	old box acrylic	2	140	0.3	2L4' T8 28w/ELEE HI/NEW	new wrap wide	2	64	0.1	0.2	432	2,840
IN	Interior	212	George Washington-Middle S	Bath Mt101	1	2L4' T8 32w/EL	trof acr	1	60	0.1	2L4' T8 28w/ELEE LO	rlrb	1	42	0.0	0.0	66	3,640
IN	Interior	213	George Washington-Middle S	Bath Mt101	1	2L2' T8 17w/EL	vanity	1	33	0.0	2L2' T8 15w/ELEE LO/NEW	new vanity	1	24	0.0	0.0	33	3,640
IN	Interior	214	George Washington-Middle S	Closet Cc101	1	2L4' T8 32w/EL	wrap	1	60	0.1	1L4' T8 28w/ELEE HI/NEW	new wrap	1	33	0.0	0.0	14	500
IN	Interior	215	George Washington-Middle S	Bath Wt101	1	2L4' T12 U EE/EEMAG	trof acr	1	70	0.1	2L2' T8 15w/ELEE HI/RFL	rlrb rfl	1	33	0.0	0.0	135	3,640
IN	Interior	216	George Washington-Middle S	Bath Wt101	1	2L2' T12 STD/STD	vanity	1	56	0.1	2L2' T8 15w/ELEE LO/NEW	new vanity	1	24	0.0	0.0	116	3,640
IN	Interior	217	George Washington-Middle S	Bath Wt101	1	100W INCANDESCENT	can rec 6"	1	100	0.1	21 WATT LED SI/LED21Par38/D	screw in led	1	21	0.0	0.1	288	3,640
IN	Interior	218	George Washington-Middle S	Storage By Auditorium	1	2L4' T12 EE/EEMAG-8'	old strip	1	70	0.1	2L4' T8 28w/ELEE LO/STRIP KI	rlrb strip kit	1	42	0.0	0.0	14	500
IN	Interior	219	George Washington-Middle S	Storage At104 Ticket Booth	1	2L4' T12 EE/EEMAG-8'	old strip	1	70	0.1	2L4' T8 28w/ELEE LO/STRIP KI	rlrb strip kit	1	42	0.0	0.0	14	500
IN	Interior	220	George Washington-Middle S	Bath Bt141	1	2L2' F40 BIAX/EL	trof acr	1	72	0.1	2L2' F40BIAX/EL28W	rlrb	1	63	0.1	0.0	33	3,640
IN	Interior	221	George Washington-Middle S	Bath Bt141	1	2L4' T8 32w/EL	trof acr	2	60	0.1	2L4' T8 28w/ELEE LO	rlrb	2	42	0.1	0.0	131	3,640
IN	Interior	222	George Washington-Middle S	Bath Bt141	1	2L4' T8 32w/EL	vanity	1	60	0.1	2L4' T8 28w/ELEE LO/NEW	new vanity	1	42	0.0	0.0	66	3,640
IN	Interior	223	George Washington-Middle S	Bath Gt141	1	2L4' T8 32w/EL	trof acr	4	60	0.2	2L4' T8 28w/ELEE LO	rlrb	4	42	0.2	0.1	262	3,640
IN	Interior	224	George Washington-Middle S	Classroom 140	1	4L4' T12 EE/EEMAG-8'	old wrap	9	140	1.3	2L4' T8 28w/ELEE HI/NEW-8'	new wrap	9	64	0.6	0.7	1,943	2,840
IN	Interior	225	George Washington-Middle S	Office 141	1	4L4' T12 EE/EEMAG-8'	old wrap	2	140	0.3	2L4' T8 28w/ELEE HI/NEW-8'	new wrap	2	64	0.1	0.2	432	2,840
IN	Interior	226	George Washington-Middle S	Closet As141	1	2L4' T12 EE/EEMAG	wrap	2	70	0.1	1L4' T8 28w/ELEE HI/NEW	new wrap	2	33	0.1	0.1	37	500
IN	Interior	227	George Washington-Middle S	Closet Bs141	1	2L4' T12 EE/EEMAG	wrap	2	70	0.1	1L4' T8 28w/ELEE HI/NEW	new wrap	2	33	0.1	0.1	37	500
IN	Interior	228	George Washington-Middle S	Classroom 139	1	4L4' T12 EE/EEMAG-8'	old wrap	7	140	1.0	2L4' T8 28w/ELEE HI/NEW-8'	new wrap	7	64	0.4	0.5	1,511	2,840
IN	Interior	229	George Washington-Middle S	Classroom 139	1	2L4' T12 EE/EEMAG	wrap	2	70	0.1	1L4' T8 28w/ELEE HI/NEW	new wrap	2	33	0.1	0.1	210	2,840
IN	Interior	230	George Washington-Middle S	Classroom 138	1	4L4' T12 EE/EEMAG-8'	old wrap	9	140	1.3	2L4' T8 28w/ELEE HI/NEW-8'	new wrap	9	64	0.6	0.7	1,943	2,840
IN	Interior	231	George Washington-Middle S	Classroom 137	1	4L4' T12 EE/EEMAG-8'	old wrap	9	140	1.3	2L4' T8 28w/ELEE HI/NEW-8'	new wrap	9	64	0.6	0.7	1,943	2,840
IN	Interior	232	George Washington-Middle S	Storage Server	1	4L4' T12 EE/EEMAG	trof acr	2	140	0.3	2L4' T8 28w/ELEE HI/RFL	rlrb rfl	2	64	0.1	0.2	371	2,440
IN	Interior	233	George Washington-Middle S	Office 128Ao	1	4L4' T8 32w/EL	trof acr	2	112	0.2	2L4' T8 28w/ELEE HI/RFL	rlrb rfl	2	64	0.1	0.1	273	2,840
IN	Interior	234	George Washington-Middle S	Lounge Media Center Staff	1	4L4' T12 EE/EEMAG	wrap	6	140	0.8	2L4' T8 28w/ELEE HI/NEW	new wrap wide	6	64	0.4	0.5	1,149	2,520
IN	Interior	235	George Washington-Middle S	Library Media Center Staff	1	4L4' T12 EE/EEMAG	trof acr	19	140	2.7	2L4' T8 28w/ELEE/RFL	rlrb RT8 kit	19	48	0.9	1.7	4,964	2,840
IN	Interior	236	George Washington-Middle S	Library Media Center Staff	1	2L4' T8 32w/EL	trof acr	18	60	1.1	2L4' T8 28w/ELEE/RFL	rlrb RT8 kit	18	48	0.9	0.2	613	2,840
IN	Interior	237	George Washington-Middle S	Hall 1A	1	3L2' T8 17w/EL	trof acr	27	47	1.3	3L2' T8 15w/ELEE LO	rlrb	27	39	1.1	0.2	786	3,640
IN	Interior	238	George Washington-Middle S	Hall By Court Yard	1	3L2' T8 17w/EL	trof acr	6	47	0.3	3L2' T8 15w/ELEE LO	rlrb	6	39	0.2	0.0	175	3,640
IN	Interior	239	George Washington-Middle S	Hall 1B	1	6L2' T12 STD/STD	trof opaque	8	168	1.3	6L2' T8 15w/ELEE LO	rlrb rfl	8	78	0.6	0.7	2,621	3,640
IN	Interior	240	George Washington-Middle S	Classroom 105 Wood Shop	1	2L8' T12 HO STD/EL	eggcrate	20	195	3.9	4L4' T8 28w/ELEE HI/NEW-8'	new wrap	20	126	2.5	1.4	3,919	2,840

In or Out	ECM	Line	Building Name	Location	Fl	Pre Fixture Description	Pre Fixture Style	Pre Qty	Pre Watts	Pre kW	Post Fixture Description	Post Fixture Style	Post Qty	Post Watts	Post kW	kW Saved	kWH Saved	Annual Hours
IN	Interior	241	George Washington-Middle S	Office 105Ao	1	4L4' T12 EE/EEMAG-8'	old wrap	1	140	0.1	2L4' T8 28w/ELEE HI/NEW-8'	new wrap	1	64	0.1	0.1	216	2,840
IN	Interior	242	George Washington-Middle S	Closet 105Bs	1	2L4' T8 32w/EL-8'	strip	1	60	0.1	2L4' T8 28w/ELEE LO/STRIP KI	rlrb strip kit	1	42	0.0	0.0	9	500
IN	Interior	243	George Washington-Middle S	Closet 105Bs	1	4L4' T12 EE/EEMAG	old wrap	1	140	0.1	2L4' T8 28w/ELEE HI/NEW	new wrap wide	1	64	0.1	0.1	38	500
IN	Interior	244	George Washington-Middle S	Closet 105Sc	1	2L4' T8 32w/EL	wrap	1	60	0.1	1L4' T8 28w/ELEE HI/NEW	new wrap	1	33	0.0	0.0	14	500
IN	Interior	245	George Washington-Middle S	Hall 1D	1	6L2' T12 STD/STD	trof opaque	21	168	3.5	6L2' T8 15w/ELEE LO	rlrb rfl	21	78	1.6	1.9	6,880	3,640
IN	Interior	246	George Washington-Middle S	Hall 1D	1	6L4' T12 EE/EEMAG	circle	1	210	0.2	6L4' T8 28w/ELEE LO	rlrb 4L & 2L	1	126	0.1	0.1	306	3,640
IN	Interior	247	George Washington-Middle S	Hall Display Case	1	2L4' T12 EE/EEMAG	trof opaque 6"	2	70	0.1	2L4' T8 28w/ELEE LO	rlrb	2	42	0.1	0.1	204	3,640
IN	Interior	248	George Washington-Middle S	Hall Display Case	1	2L4' T8 U/EL	trof acr	1	60	0.1	2L2' T8 15w/ELEE HI/RFL	rlrb rfl	1	33	0.0	0.0	98	3,640
IN	Interior	249	George Washington-Middle S	Hall Display Case	1	3L2' T8 17w/EL	trof acr	1	47	0.0	3L2' T8 15w/ELEE LO	rlrb	1	39	0.0	0.0	29	3,640
IN	Interior	250	George Washington-Middle S	Hall 1F	1	3L4' T8 32w/EL	trof acr	2	88	0.2	3L4' T8 28w/ELEE LO	rlrb	2	63	0.1	0.1	182	3,640
IN	Interior	251	George Washington-Middle S	Hall 1F	1	3L4' T8 32w/EL	trof acr	3	88	0.3	3L4' T8 28w/ELEE LO	rlrb	3	63	0.2	0.1	273	3,640
IN	Interior	252	George Washington-Middle S	Hall 1G	1	3L4' T8 32w/EL	trof acr	2	88	0.2	3L4' T8 28w/ELEE LO	rlrb	2	63	0.1	0.1	182	3,640
IN	Interior	253	George Washington-Middle S	Hall 1G	1	2L4' T12 EE/EEMAG	trof acr 1' wide	26	70	1.8	2L4' T8 28w/ELEE LO	rlrb	26	42	1.1	0.7	2,650	3,640
IN	Interior	254	George Washington-Middle S	Hall 1E	1	3L4' T12 EE/EEMAG	trof acr	3	110	0.3	3L4' T8 28w/ELEE LO	rlrb	3	63	0.2	0.1	513	3,640
IN	Interior	255	George Washington-Middle S	Hall 1E	1	4L4' T12 EE/EEMAG	trof acr	2	140	0.3	2L4' T8 28w/ELEE HI/RFL	rlrb rfl	2	64	0.1	0.2	553	3,640
IN	Interior	256	George Washington-Middle S	Hall 1C	1	3L4' T8 32w/EL	trof acr	5	88	0.4	3L4' T8 28w/ELEE LO	rlrb	5	63	0.3	0.1	455	3,640
IN	Exterior	257	George Washington-Middle S	Bldg Mt Fixture 1	ext	50W HI PRESSURE SODI	square surface mt	2	65	0.1	26 WATT LED/NEW	new LED exterior area lig	2	26	0.1	0.1	342	4,380
IN	Exterior	258	George Washington-Middle S	Bldg Mt Fixture 2	ext	150W HI PRESSURE SOD	wallpack	2	190	0.4	70 WATT LED/NEW	new LED wallpack	2	70	0.1	0.2	1,051	4,380
IN	Exterior	259	George Washington-Middle S	Bldg Mt Fixture 3	ext	150W HI PRESSURE SOD	wallpack	1	190	0.2	70 WATT LED/NEW	new LED wallpack	1	70	0.1	0.1	526	4,380
IN	Exterior	260	George Washington-Middle S	Bldg Mt Fixture 4	ext	150W HI PRESSURE SOD	wallpack	1	190	0.2	70 WATT LED/NEW	new LED wallpack	1	70	0.1	0.1	526	4,380
IN	Exterior	261	George Washington-Middle S	Bldg Mt Fixture 5	ext	150W HI PRESSURE SOD	wallpack	1	190	0.2	70 WATT LED/NEW	new LED wallpack	1	70	0.1	0.1	526	4,380
IN	Exterior	262	George Washington-Middle S	Bldg Mt Fixture 6	ext	50W HI PRESSURE SODI	square surface mt	2	65	0.1	26 WATT LED/NEW	new LED exterior area lig	2	26	0.1	0.1	342	4,380
IN	Exterior	263	George Washington-Middle S	Bldg Mt Fixture 7	ext	50W HI PRESSURE SODI	square surface mt	1	65	0.1	26 WATT LED/NEW	new LED exterior area lig	1	26	0.0	0.0	171	4,380
IN	Exterior	264	George Washington-Middle S	Bldg Mt Fixture 8	ext	150W HI PRESSURE SOD	wallpack	1	190	0.2	70 WATT LED/NEW	new LED wallpack	1	70	0.1	0.1	526	4,380
IN	Exterior	265	George Washington-Middle S	Bldg Mt Fixture 9	ext	50W HI PRESSURE SODI	square surface mt	2	65	0.1	26 WATT LED/NEW	new LED exterior area lig	2	26	0.1	0.1	342	4,380
IN	Exterior	266	George Washington-Middle S	Bldg Mt Fixture 10	ext	250W METAL HALIDE	flood	4	295	1.2	133 WATT LED/NEW	new LED flood	4	133	0.5	0.6	2,838	4,380
IN	Exterior	267	George Washington-Middle S	Bldg Mt Fixture 11	ext	100W HI PRESSURE SOD	square surface mt	1	130	0.1	50 WATT LED/NEW	new LED exterior area lig	1	50	0.1	0.1	350	4,380
IN	Exterior	268	George Washington-Middle S	Bldg Mt Fixture 12	ext	60W INCANDESCENT	square surface mt	4	60	0.2	11W COMPACT SI/29708/CF11	screw in	4	11	0.0	0.2	858	4,380
IN	Exterior	269	George Washington-Middle S	Bldg Mt Fixture 13	ext	90W INCANDESCENT	flood	4	90	0.4	49 WATT LED/NEW	new LED flood	4	49	0.2	0.2	718	4,380
IN	Interior	270	George Washington-Middle S	Storage Portable	1	2L4' T12 EE/EEMAG	old wrap	34	70	2.4	1L4' T8 28w/ELEE HI/NEW	new wrap	34	33	1.1	1.3	629	500
IN	Interior	271	Packanack-Elementary Scho	Classroom 24	1	4L4' T8 32w/EL-8'	wrap	9	112	1.0	2L4' T8 28w/ELEE HI/NEW-8'	new wrap	9	64	0.6	0.4	1,089	2,520
IN	Interior	272	Packanack-Elementary Scho	Bath 24	1	2x13W COMPACT HARDV	square surface mt	1	30	0.0	NO RETRO	no change needed		30	0.0			3,320
IN	Interior	273	Packanack-Elementary Scho	Classroom 25	1	4L4' T8 32w/EL-8'	wrap	10	112	1.1	2L4' T8 28w/ELEE HI/NEW-8'	new wrap	10	64	0.6	0.5	1,210	2,520
IN	Interior	274	Packanack-Elementary Scho	Bath 25	1	2x13W COMPACT HARDV	square surface mt	1	30	0.0	NO RETRO	no change needed		30	0.0			3,320
IN	Interior	275	Packanack-Elementary Scho	Storage 25	1	2L4' T12 EE/EEMAG	wrap	1	70	0.1	1L4' T8 28w/ELEE HI/NEW	new wrap	1	33	0.0	0.0	19	500
IN	Interior	276	Packanack-Elementary Scho	Classroom 23	1	4L4' T8 32w/EL-8'	wrap	9	112	1.0	2L4' T8 28w/ELEE HI/NEW-8'	new wrap	9	64	0.6	0.4	1,089	2,520
IN	Interior	277	Packanack-Elementary Scho	Bath 23	1	2x13W COMPACT HARDV	square surface mt	1	30	0.0	NO RETRO	no change needed		30	0.0			3,320
IN	Interior	278	Packanack-Elementary Scho	Classroom 26	1	4L4' T8 32w/EL-8'	wrap	10	112	1.1	2L4' T8 28w/ELEE HI/NEW-8'	new wrap	10	64	0.6	0.5	1,210	2,520
IN	Interior	279	Packanack-Elementary Scho	Bath 26	1	2x13W COMPACT HARDV	square surface mt	1	30	0.0	NO RETRO	no change needed		30	0.0			3,320
IN	Interior	280	Packanack-Elementary Scho	Storage 26	1	2L4' T12 EE/EEMAG	wrap	1	70	0.1	1L4' T8 28w/ELEE HI/NEW	new wrap	1	33	0.0	0.0	19	500
IN	Interior	281	Packanack-Elementary Scho	Classroom 23	1	4L4' T8 32w/EL-8'	wrap	9	112	1.0	2L4' T8 28w/ELEE HI/NEW-8'	new wrap	9	64	0.6	0.4	1,089	2,520
IN	Interior	282	Packanack-Elementary Scho	Bath 23	1	2x13W COMPACT HARDV	square surface mt	1	30	0.0	NO RETRO	no change needed		30	0.0			3,320
IN	Interior	283	Packanack-Elementary Scho	Classroom 21	1	4L4' T8 32w/EL-8'	wrap	9	112	1.0	2L4' T8 28w/ELEE HI/NEW-8'	new wrap	9	64	0.6	0.4	1,089	2,520
IN	Interior	284	Packanack-Elementary Scho	Bath 21	1	2x13W COMPACT HARDV	square surface mt	1	30	0.0	NO RETRO	no change needed		30	0.0			3,320
IN	Interior	285	Packanack-Elementary Scho	Classroom 27	1	4L4' T8 32w/EL-8'	wrap	10	112	1.1	2L4' T8 28w/ELEE HI/NEW-8'	new wrap	10	64	0.6	0.5	1,210	2,520
IN	Interior	286	Packanack-Elementary Scho	Bath 27	1	2x13W COMPACT HARDV	square surface mt	1	30	0.0	NO RETRO	no change needed		30	0.0			3,320
IN	Interior	287	Packanack-Elementary Scho	Storage 27	1	2L4' T12 EE/EEMAG	wrap	1	70	0.1	1L4' T8 28w/ELEE HI/NEW	new wrap	1	33	0.0	0.0	19	500
IN	Interior	288	Packanack-Elementary Scho	Classroom 20	1	4L4' T8 32w/EL-8'	wrap	9	112	1.0	2L4' T8 28w/ELEE HI/NEW-8'	new wrap	9	64	0.6	0.4	1,089	2,520

In or Out	ECM	Line	Building Name	Location	Fl	Pre Fixture Description	Pre Fixture Style	Pre Qty	Pre Watts	Pre kW	Post Fixture Description	Post Fixture Style	Post Qty	Post Watts	Post kW	kW Saved	kWH Saved	Annual Hours
IN	Interior	289	Packanack-Elementary Scho	Bath 20	1	2x13W COMPACT HARDV	square surface m	1	30	0.0	NO RETRO	no change needed		30	0.0			3,320
IN	Interior	290	Packanack-Elementary Scho	Lounge Teachers	1	6L2' T12 STD/STD	decorative	6	168	1.0	6L2' T8 15w/ELEE LO	rlrb	6	78	0.5	0.5	1,361	2,520
IN	Interior	291	Packanack-Elementary Scho	Hall 25 To 20	1	3L4' T8 32w/EL	trof acr	10	88	0.9	3L4' T8 28w/ELEE LO	rlrb	10	63	0.6	0.3	905	3,620
IN	Interior	292	Packanack-Elementary Scho	Bath Girls	1	13W COMPACT HARDWI	can rec 6"	4	15	0.1	NO RETRO	no change needed		15	0.1			3,320
IN	Interior	293	Packanack-Elementary Scho	Bath Girls	1	2L2' T8 17w/EL	vanity	1	33	0.0	2L2' T8 15w/ELEE LO/NEW	new vanity	1	24	0.0	0.0	30	3,320
IN	Interior	294	Packanack-Elementary Scho	Closet Clean	1	2x60W INCANDESCENTS	old drum	1	120	0.1	2L2' T8 15w/ELEE LO/NEW	new wrap	1	24	0.0	0.1	48	500
IN	Interior	295	Packanack-Elementary Scho	Bath Boys	1	13W COMPACT HARDWI	can rec 6"	4	15	0.1	NO RETRO	no change needed		15	0.1			3,320
IN	Interior	296	Packanack-Elementary Scho	Bath Boys	1	2L2' T8 17w/EL	vanity	1	33	0.0	2L2' T8 15w/ELEE LO/NEW	new vanity	1	24	0.0	0.0	30	3,320
IN	Interior	297	Packanack-Elementary Scho	Cafeteria Seating Area	1	4L4' T8 32w/EL	wrap	4	112	0.4	2L4' T8 28w/ELEE HI/NEW	new wrap wide	4	64	0.3	0.2	522	2,720
IN	Interior	298	Packanack-Elementary Scho	Cafeteria Seating Area	1	4L4' T12 EE/EEMAG	wrap	33	140	4.6	2L4' T8 28w/ELEE HI/NEW	new wrap wide	33	64	2.1	2.5	6,822	2,720
IN	Interior	299	Packanack-Elementary Scho	Storage Dry Goods	1	2L4' T12 EE/EEMAG	old wrap	1	70	0.1	1L4' T8 28w/ELEE HI/NEW	new wrap	1	33	0.0	0.0	19	500
IN	Interior	300	Packanack-Elementary Scho	Kitchen Prep Area	1	4L4' T8 32w/EL-8'	old wrap	1	112	0.1	4L4' T8 28w/ELEE LO/NEW-8'	new wrap	1	83	0.1	0.0	56	1,920
IN	Interior	301	Packanack-Elementary Scho	Kitchen Prep Area	1	2L4' T12 EE/EEMAG	old wrap	4	70	0.3	2L4' T8 28w/ELEE LO/NEW	new wrap	4	42	0.2	0.1	215	1,920
IN	Interior	302	Packanack-Elementary Scho	Kitchen Prep Area	1	4L4' T12 EE/EEMAG-8'	old wrap	5	140	0.7	4L4' T8 28w/ELEE LO/NEW-8'	new wrap	5	83	0.4	0.3	547	1,920
IN	Interior	303	Packanack-Elementary Scho	Hall Kitchen	1	3L4' T8 32w/EL	trof acr	1	88	0.1	3L4' T8 28w/ELEE LO	rlrb	1	63	0.1	0.0	91	3,620
IN	Interior	304	Packanack-Elementary Scho	Hall Kitchen	1	4L4' T12 EE/EEMAG-8'	wrap	1	140	0.1	2L4' T8 28w/ELEE HI/NEW-8'	new wrap	1	64	0.1	0.1	275	3,620
IN	Interior	305	Packanack-Elementary Scho	Hall Kitchen	1	3L2' T8 17w/EL	trof acr	1	47	0.0	3L2' T8 15w/ELEE LO	rlrb	1	39	0.0	0.0	29	3,620
IN	Interior	306	Packanack-Elementary Scho	Closet Incinerator	1	2x60W INCANDESCENTS	old drum	1	120	0.1	2L2' T8 15w/ELEE LO/NEW	new wrap	1	24	0.0	0.1	48	500
IN	Interior	307	Packanack-Elementary Scho	Classroom 18	1	4L4' T8 32w/EL-8'	old wrap	8	112	0.9	2L4' T8 28w/ELEE HI/NEW-8'	new wrap	8	64	0.5	0.4	968	2,520
IN	Interior	308	Packanack-Elementary Scho	Classroom 18	1	2L4' T8 32w/EL	old wrap	1	60	0.1	1L4' T8 28w/ELEE HI/NEW	new wrap	1	33	0.0	0.0	68	2,520
IN	Interior	309	Packanack-Elementary Scho	Bath 18	1	13W COMPACT HARDWI	square surface m	1	15	0.0	NO RETRO	no change needed		15	0.0			3,320
IN	Interior	310	Packanack-Elementary Scho	Classroom 19	1	4L4' T8 32w/EL-8'	old wrap	8	112	0.9	2L4' T8 28w/ELEE HI/NEW-8'	new wrap	8	64	0.5	0.4	968	2,520
IN	Interior	311	Packanack-Elementary Scho	Classroom 19	1	2L4' T8 32w/EL	old wrap	1	60	0.1	1L4' T8 28w/ELEE HI/NEW	new wrap	1	33	0.0	0.0	68	2,520
IN	Interior	312	Packanack-Elementary Scho	Bath 19	1	13W COMPACT HARDWI	square surface m	1	15	0.0	NO RETRO	no change needed		15	0.0			3,320
IN	Interior	313	Packanack-Elementary Scho	Classroom 16	1	4L4' T8 32w/EL-8'	old wrap	8	112	0.9	2L4' T8 28w/ELEE HI/NEW-8'	new wrap	8	64	0.5	0.4	968	2,520
IN	Interior	314	Packanack-Elementary Scho	Classroom 16	1	2L4' T8 32w/EL	old wrap	1	60	0.1	1L4' T8 28w/ELEE HI/NEW	new wrap	1	33	0.0	0.0	68	2,520
IN	Interior	315	Packanack-Elementary Scho	Bath 16	1	13W COMPACT HARDWI	square surface m	1	15	0.0	NO RETRO	no change needed		15	0.0			3,320
IN	Interior	316	Packanack-Elementary Scho	Classroom 17	1	4L4' T8 32w/EL-8'	old wrap	8	112	0.9	2L4' T8 28w/ELEE HI/NEW-8'	new wrap	8	64	0.5	0.4	968	2,520
IN	Interior	317	Packanack-Elementary Scho	Classroom 17	1	2L4' T8 32w/EL	old wrap	1	60	0.1	1L4' T8 28w/ELEE HI/NEW	new wrap	1	33	0.0	0.0	68	2,520
IN	Interior	318	Packanack-Elementary Scho	Bath 17	1	13W COMPACT HARDWI	square surface m	1	15	0.0	NO RETRO	no change needed		15	0.0			3,320
IN	Interior	319	Packanack-Elementary Scho	Office Nurse	1	4L4' T8 32w/EL-8'	old wrap	2	112	0.2	2L4' T8 28w/ELEE HI/NEW-8'	new wrap	2	64	0.1	0.1	223	2,320
IN	Interior	320	Packanack-Elementary Scho	Bath Nurse	1	2L4' T8 32w/EL	vanity	1	60	0.1	2L4' T8 28w/ELEE LO/NEW	new vanity	1	42	0.0	0.0	60	3,320
IN	Interior	321	Packanack-Elementary Scho	Classroom 15	1	3L4' T8 32w/EL	trof acr	7	88	0.6	2L4' T8 28w/ELEE HI/RFL	rlrb RT8 kit	7	64	0.4	0.2	423	2,520
IN	Interior	322	Packanack-Elementary Scho	Bath 15	1	60W INCANDESCENT	old vanity	1	60	0.1	1L2' T8 15w/ELEE LO/NEW	new vanity	1	14	0.0	0.0	153	3,320
IN	Interior	323	Packanack-Elementary Scho	Storage Supplies	1	60W INCANDESCENT	keyless	1	60	0.1	1L2' T8 15w/ELEE LO/NEW	new vanity	1	14	0.0	0.0	23	500
IN	Interior	324	Packanack-Elementary Scho	Classroom 14	1	4L4' T8 32w/EL-8'	old wrap	6	112	0.7	2L4' T8 28w/ELEE HI/NEW-8'	new wrap	6	64	0.4	0.3	726	2,520
IN	Interior	325	Packanack-Elementary Scho	Classroom 11	1	4L4' T8 32w/EL-8'	old wrap	8	112	0.9	2L4' T8 28w/ELEE HI/NEW-8'	new wrap	8	64	0.5	0.4	968	2,520
IN	Interior	326	Packanack-Elementary Scho	Storage 11	1	60W INCANDESCENT	old drum	1	60	0.1	2L2' T8 15w/ELEE LO/NEW	new wrap	1	24	0.0	0.0	18	500
IN	Interior	327	Packanack-Elementary Scho	Bath 11	1	2L4' T12 EE/EEMAG	old wrap	1	70	0.1	1L4' T8 28w/ELEE HI/NEW	new wrap	1	33	0.0	0.0	123	3,320
IN	Interior	328	Packanack-Elementary Scho	Classroom 13	1	4L4' T8 32w/EL-8'	old wrap	6	112	0.7	2L4' T8 28w/ELEE HI/NEW-8'	new wrap	6	64	0.4	0.3	726	2,520
IN	Interior	329	Packanack-Elementary Scho	Bath 13	1	60W INCANDESCENT	keyless	1	60	0.1	1L2' T8 15w/ELEE LO/NEW	new vanity	1	14	0.0	0.0	153	3,320
IN	Interior	330	Packanack-Elementary Scho	Hall 12 To 18	1	2L4' T8 32w/EL	wrap	4	60	0.2	1L4' T8 28w/ELEE HI/NEW	new wrap	4	33	0.1	0.1	391	3,620
IN	Interior	331	Packanack-Elementary Scho	Hall 12 To 18	1	3L2' T8 17w/EL	trof acr	2	47	0.1	3L2' T8 15w/ELEE LO	rlrb	2	39	0.1	0.0	58	3,620
IN	Interior	332	Packanack-Elementary Scho	Hall 12 To 18	1	3L4' T8 32w/EL	box acrylic	5	88	0.4	3L4' T8 28w/ELEE LO	rlrb	5	63	0.3	0.1	453	3,620
IN	Interior	333	Packanack-Elementary Scho	Library 12 To 18	1	4L4' T12 EE/EEMAG	trof acr	37	140	5.2	2L4' T8 28w/ELEE HI/RFL	rlrb RT8 kit	37	64	2.4	2.8	7,086	2,520
IN	Interior	334	Packanack-Elementary Scho	Library 12 To 18	1	4L4' T8 32w/EL	trof acr	4	112	0.4	2L4' T8 28w/ELEE HI/RFL	rlrb RT8 kit	4	64	0.3	0.2	484	2,520
IN	Interior	335	Packanack-Elementary Scho	Library 12 To 18	1	175W METAL HALIDE	indirect	4	205	0.8	NO RETRO	no change		205	0.8			2,520
IN	Interior	336	Packanack-Elementary Scho	Library 12 To 18	1	2L4' T12 U EE/EEMAG	trof acr	3	70	0.2	2L2' T8 15w/ELEE HI/RFL	rlrb RT8 kit	3	33	0.1	0.1	280	2,520

In or Out	ECM	Line	Building Name	Location	Fl	Pre Fixture Description	Pre Fixture Style	Pre Qty	Pre Watts	Pre kW	Post Fixture Description	Post Fixture Style	Post Qty	Post Watts	Post kW	kW Saved	kWH Saved	Annual Hours
IN	Interior	337	Packanack-Elementary Scho	Office Library	1	4L4' T12 EE/EEMAG	trof acr	4	140	0.6	2L4' T8 28w/ELEE HI/RFL	rlrb rfl	4	64	0.3	0.3	705	2,320
IN	Interior	338	Packanack-Elementary Scho	Storage Server	1	2L4' T12 EE/EEMAG	old wrap	2	70	0.1	1L4' T8 28w/ELEE HI/NEW	new wrap	2	33	0.1	0.1	37	500
IN	Interior	339	Packanack-Elementary Scho	Storage Sprinkler Room	1	4L4' T8 32w/EL	trof acr	2	112	0.2	2L4' T8 28w/ELEE HI/RFL	rlrb rfl	2	64	0.1	0.1	48	500
IN	Interior	340	Packanack-Elementary Scho	Hall By Library	1	4L4' T12 EE/EEMAG	trof acr	5	140	0.7	2L4' T8 28w/ELEE HI/RFL	rlrb rfl	5	64	0.3	0.4	1,376	3,620
IN	Interior	341	Packanack-Elementary Scho	Classroom 103B	1	4L4' T12 EE/EEMAG	trof acrylic dbl swi	6	140	0.8	2L4' T8 28w/ELEE HI/RFL	rlrb RT8 kit	6	64	0.4	0.5	1,149	2,520
IN	Interior	342	Packanack-Elementary Scho	Classroom 103A	1	4L4' T12 EE/EEMAG	trof acrylic dbl swi	6	140	0.8	2L4' T8 28w/ELEE HI/RFL	rlrb RT8 kit	6	64	0.4	0.5	1,149	2,520
IN	Interior	343	Packanack-Elementary Scho	Hall 103B To 100	1	4L4' T12 EE/EEMAG	trof acr	12	140	1.7	2L4' T8 28w/ELEE HI/RFL	rlrb rfl	12	64	0.8	0.9	3,301	3,620
IN	Interior	344	Packanack-Elementary Scho	Classroom 102	1	4L4' T12 EE/EEMAG	trof acrylic dbl swi	14	140	2.0	2L4' T8 28w/ELEE HI/RFL	rlrb RT8 kit	14	64	0.9	1.1	2,681	2,520
IN	Interior	345	Packanack-Elementary Scho	Classroom 101B	1	4L4' T12 EE/EEMAG	trof acrylic dbl swi	6	140	0.8	2L4' T8 28w/ELEE HI/RFL	rlrb RT8 kit	6	64	0.4	0.5	1,149	2,520
IN	Interior	346	Packanack-Elementary Scho	Classroom 101A	1	4L4' T12 EE/EEMAG	trof acrylic dbl swi	6	140	0.8	2L4' T8 28w/ELEE HI/RFL	rlrb RT8 kit	6	64	0.4	0.5	1,149	2,520
IN	Interior	347	Packanack-Elementary Scho	Classroom 100	1	4L4' T12 EE/EEMAG	trof acrylic dbl swi	12	140	1.7	2L4' T8 28w/ELEE HI/RFL	rlrb RT8 kit	12	64	0.8	0.9	2,298	2,520
IN	Interior	348	Packanack-Elementary Scho	Bath Girls	1	4L4' T12 EE/EEMAG	trof acr	3	140	0.4	2L4' T8 28w/ELEE HI/RFL	rlrb rfl	3	64	0.2	0.2	757	3,320
IN	Interior	349	Packanack-Elementary Scho	Bath Boys	1	4L4' T12 EE/EEMAG	trof acr	2	140	0.3	2L4' T8 28w/ELEE HI/RFL	rlrb rfl	2	64	0.1	0.2	505	3,320
IN	Interior	350	Packanack-Elementary Scho	Hall Baths To Office	1	2L4' T12 EE/EEMAG	wrap	3	70	0.2	1L4' T8 28w/ELEE HI/NEW	new wrap	3	33	0.1	0.1	402	3,620
IN	Interior	351	Packanack-Elementary Scho	Hall Baths To Office	1	4L4' T12 EE/EEMAG	trof acr	6	140	0.8	2L4' T8 28w/ELEE HI/RFL	rlrb rfl	6	64	0.4	0.5	1,651	3,620
IN	Interior	352	Packanack-Elementary Scho	Office Cst	1	4L4' T8 32w/EL	trof acr	4	112	0.4	2L4' T8 28w/ELEE HI/RFL	rlrb rfl	4	64	0.3	0.2	445	2,320
IN	Interior	353	Packanack-Elementary Scho	Storage By Cst	1	2L4' T8 32w/EL	wrap	1	60	0.1	1L4' T8 28w/ELEE HI/NEW	new wrap	1	33	0.0	0.0	14	500
IN	Interior	354	Packanack-Elementary Scho	Office Custodian	1	3L4' T8 32w/EL	trof acr	1	88	0.1	3L4' T8 28w/ELEE LO	rlrb	1	63	0.1	0.0	58	2,320
IN	Interior	355	Packanack-Elementary Scho	Classroom 8	1	4L4' T8 32w/EL-8'	wrap	6	112	0.7	2L4' T8 28w/ELEE HI/NEW-8'	new wrap	6	64	0.4	0.3	726	2,520
IN	Interior	356	Packanack-Elementary Scho	Office Phone	1	4L4' T8 32w/EL	wrap	1	112	0.1	2L4' T8 28w/ELEE HI/NEW	new wrap wide	1	64	0.1	0.0	111	2,320
IN	Interior	357	Packanack-Elementary Scho	Bath Boys	1	4L4' T8 32w/EL	box acrylic	2	112	0.2	2L4' T8 28w/ELEE HI/RFL	rlrb rfl	2	64	0.1	0.1	319	3,320
IN	Interior	358	Packanack-Elementary Scho	Classroom 7	1	4L4' T8 32w/EL-8'	wrap	6	112	0.7	2L4' T8 28w/ELEE HI/NEW-8'	new wrap	6	64	0.4	0.3	726	2,520
IN	Interior	359	Packanack-Elementary Scho	Classroom 6	1	4L4' T8 32w/EL-8'	wrap	6	112	0.7	2L4' T8 28w/ELEE HI/NEW-8'	new wrap	6	64	0.4	0.3	726	2,520
IN	Interior	360	Packanack-Elementary Scho	Classroom 5	1	4L4' T8 32w/EL-8'	wrap	6	112	0.7	2L4' T8 28w/ELEE HI/NEW-8'	new wrap	6	64	0.4	0.3	726	2,520
IN	Interior	361	Packanack-Elementary Scho	Classroom 4	1	4L4' T8 32w/EL-8'	wrap	6	112	0.7	2L4' T8 28w/ELEE HI/NEW-8'	new wrap	6	64	0.4	0.3	726	2,520
IN	Interior	362	Packanack-Elementary Scho	Office Main	1	4L4' T8 32w/EL	box acrylic	1	112	0.1	2L4' T8 28w/ELEE HI/RFL	rlrb rfl	1	64	0.1	0.0	111	2,320
IN	Interior	363	Packanack-Elementary Scho	Office Main	1	4L4' T8 32w/EL-8'	wrap	1	112	0.1	2L4' T8 28w/ELEE HI/NEW-8'	new wrap	1	64	0.1	0.0	111	2,320
IN	Interior	364	Packanack-Elementary Scho	Hall To Principal	1	2L4' T8 32w/EL	wrap	1	60	0.1	1L4' T8 28w/ELEE HI/NEW	new wrap	1	33	0.0	0.0	98	3,620
IN	Interior	365	Packanack-Elementary Scho	Bath Main Office	1	3L4' T8 32w/EL	box acrylic	1	88	0.1	3L4' T8 28w/ELEE LO	rlrb	1	63	0.1	0.0	83	3,320
IN	Interior	366	Packanack-Elementary Scho	Hall Lib To Stage	1	3L4' T8 32w/EL	trof acr	12	88	1.1	3L4' T8 28w/ELEE LO	rlrb	12	63	0.8	0.3	1,086	3,620
IN	Interior	367	Packanack-Elementary Scho	Hall Lib To Stage	1	2L4' T12 EE/EEMAG	wrap	2	70	0.1	1L4' T8 28w/ELEE HI/NEW	new wrap	2	33	0.1	0.1	268	3,620
IN	Interior	368	Packanack-Elementary Scho	Hall Display Case	1	1L4' T12 EE/EEMAG	strip	1	40	0.0	1L4' T8 28w/ELEE LO/STRIP KI	rlrb strip kit	1	22	0.0	0.0	65	3,620
IN	Interior	369	Packanack-Elementary Scho	Office Copy	1	2L4' T8 32w/EL	wrap	1	60	0.1	1L4' T8 28w/ELEE HI/NEW	new wrap	1	33	0.0	0.0	63	2,320
IN	Interior	370	Packanack-Elementary Scho	Office Principal	1	4L4' T12 EE/EEMAG	trof acr	4	140	0.6	2L4' T8 28w/ELEE HI/RFL	rlrb rfl	4	64	0.3	0.3	705	2,320
IN	Interior	371	Packanack-Elementary Scho	Bath Girls	1	3L4' T8 32w/EL	box acrylic	2	88	0.2	3L4' T8 28w/ELEE LO	rlrb	2	63	0.1	0.1	166	3,320
IN	Interior	372	Packanack-Elementary Scho	Closet Clean	1	23W COMPACT SCREWIN	keyless	1	23	0.0	NO RETRO	no change needed		23	0.0			500
IN	Interior	373	Packanack-Elementary Scho	Storage Books	1	2L4' T8 32w/EL	wrap	1	60	0.1	1L4' T8 28w/ELEE HI/NEW	new wrap	1	33	0.0	0.0	14	500
IN	Interior	374	Packanack-Elementary Scho	Mechanical Boiler	1	2L4' T8 32w/EL	industrial	6	60	0.4	2L4' T8 28w/ELEE LO	rlrb	6	42	0.3	0.1	54	500
IN	Interior	375	Packanack-Elementary Scho	Gym Main	1	4L4' T5 HO/EL	wrap	12	234	2.8	NO RETRO	no change		234	2.8			2,920
IN	Interior	376	Packanack-Elementary Scho	Stage	1	2L8' T12 HO STD/EL	strip	2	195	0.4	4L4' T8 28w/ELEE HI/STRIP KIT	rlrb strip kit	2	126	0.3	0.1	403	2,920
IN	Interior	377	Packanack-Elementary Scho	Stage	1	100W INCANDESCENT	dome	6	100	0.6	2L4' T8 28w/ELEE/NEW	new wrap	6	48	0.3	0.3	911	2,920
IN	Interior	378	Packanack-Elementary Scho	Hall By Stage	1	2L4' T12 EE/EEMAG	old wrap	1	70	0.1	1L4' T8 28w/ELEE HI/NEW	new wrap	1	33	0.0	0.0	134	3,620
IN	Interior	379	Packanack-Elementary Scho	Hall 1 To 3	1	3L4' T8 32w/EL	trof acr	3	88	0.3	3L4' T8 28w/ELEE LO	rlrb	3	63	0.2	0.1	272	3,620
IN	Interior	380	Packanack-Elementary Scho	Hall 1 To 3	1	2L4' T8 32w/EL	wrap	1	60	0.1	1L4' T8 28w/ELEE HI/NEW	new wrap	1	33	0.0	0.0	98	3,620
IN	Interior	381	Packanack-Elementary Scho	Classroom 3	1	4L4' T8 32w/EL-8'	old wrap	6	112	0.7	2L4' T8 28w/ELEE HI/NEW-8'	new wrap	6	64	0.4	0.3	726	2,520
IN	Interior	382	Packanack-Elementary Scho	Classroom 2	1	4L4' T8 32w/EL-8'	old wrap	6	112	0.7	2L4' T8 28w/ELEE HI/NEW-8'	new wrap	6	64	0.4	0.3	726	2,520
IN	Interior	383	Packanack-Elementary Scho	Classroom 1	1	4L4' T8 32w/EL-8'	old wrap	6	112	0.7	2L4' T8 28w/ELEE HI/NEW-8'	new wrap	6	64	0.4	0.3	726	2,520
IN	Exterior	384	Packanack-Elementary Scho	Bldg Mt Fixture 1	ext	50W HI PRESSURE SODI	canopy	7	65	0.5	26 WATT LED/NEW	new LED exterior area li	7	26	0.2	0.3	1,196	4,380

In or Out	ECM	Line	Building Name	Location	Fl	Pre Fixture Description	Pre Fixture Style	Pre Qty	Pre Watts	Pre kW	Post Fixture Description	Post Fixture Style	Post Qty	Post Watts	Post kW	kW Saved	kWH Saved	Annual Hours
IN	Exterior	385	Packanack-Elementary Scho	Bldg Mt Fixture 2	ext	28W COMPACT HARDWI	wallpack	2	30	0.1	NO RETRO	no change needed		30	0.1			4,380
IN	Exterior	386	Packanack-Elementary Scho	Bldg Mt Fixture 3	ext	3 WATT LED	flood	1	3	0.0	NO RETRO	no change needed		3	0.0			4,380
IN	Exterior	387	Packanack-Elementary Scho	Bldg Mt Fixture 4	ext	72W COMPACT SCREWI	flood	1	72	0.1	25 WATT LED/NEW	new LED flood	1	25	0.0	0.0	206	4,380
IN	Exterior	388	Packanack-Elementary Scho	Bldg Mt Fixture 5	ext	250W HI PRESSURE SOD	wallpack	7	295	2.1	133 WATT LED/NEW	new LED wallpack	7	133	0.9	1.1	4,967	4,380
IN	Exterior	389	Packanack-Elementary Scho	Bldg Mt Fixture 6	ext	50W HI PRESSURE SODI	wallpack	1	65	0.1	26 WATT LED/NEW	new LED wallpack	1	26	0.0	0.0	171	4,380
IN	Exterior	390	Packanack-Elementary Scho	Bldg Mt Fixture 7	ext	150W METAL HALIDE	wallpack	1	190	0.2	70 WATT LED/NEW	new LED wallpack	1	70	0.1	0.1	526	4,380
IN	Exterior	391	Packanack-Elementary Scho	Bldg Mt Fixture 8	ext	26W COMPACT HARDWI	can rec	1	28	0.0	NO RETRO	no change needed		28	0.0			4,380
IN	Interior	392	Theunis Dey-Elementary Scl	Classroom 2D	1	4L4' T8 32w/EL	trof acr	12	112	1.3	2L4' T8 28w/ELEE HI/RFL	rlrb RT8 kit	12	64	0.8	0.6	1,452	2,520
IN	Interior	393	Theunis Dey-Elementary Scl	Classroom 2C	1	4L4' T8 32w/EL	trof acr	12	112	1.3	2L4' T8 28w/ELEE HI/RFL	rlrb RT8 kit	12	64	0.8	0.6	1,452	2,520
IN	Interior	394	Theunis Dey-Elementary Scl	Classroom 2A	1	4L4' T8 32w/EL	trof acr	12	112	1.3	2L4' T8 28w/ELEE HI/RFL	rlrb RT8 kit	12	64	0.8	0.6	1,452	2,520
IN	Interior	395	Theunis Dey-Elementary Scl	Classroom 2B	1	4L4' T8 32w/EL	trof acr	12	112	1.3	2L4' T8 28w/ELEE HI/RFL	rlrb RT8 kit	12	64	0.8	0.6	1,452	2,520
IN	Interior	396	Theunis Dey-Elementary Scl	Hall 2D To 2B	1	2L4' T8 32w/EL	trof acr	5	60	0.3	2L4' T8 28w/ELEE LO	rlrb	5	42	0.2	0.1	326	3,620
IN	Interior	397	Theunis Dey-Elementary Scl	Bath Boys	1	4L4' T8 32w/EL	trof acr	2	112	0.2	2L4' T8 28w/ELEE HI/RFL	rlrb rfl	2	64	0.1	0.1	319	3,320
IN	Interior	398	Theunis Dey-Elementary Scl	Bath Boys	1	2L4' T8 32w/EL	trof acr	1	60	0.1	2L4' T8 28w/ELEE LO	rlrb	1	42	0.0	0.0	60	3,320
IN	Interior	399	Theunis Dey-Elementary Scl	Bath Girls	1	4L4' T8 32w/EL	trof acr	1	112	0.1	2L4' T8 28w/ELEE HI/RFL	rlrb rfl	1	64	0.1	0.0	159	3,320
IN	Interior	400	Theunis Dey-Elementary Scl	Bath Girls	1	2L4' T8 32w/EL	trof acr	1	60	0.1	2L4' T8 28w/ELEE LO	rlrb	1	42	0.0	0.0	60	3,320
IN	Interior	401	Theunis Dey-Elementary Scl	Bath Girls	1	2L4' T8 U/EL	trof acr	1	60	0.1	2L2' T8 15w/ELEE HI/RFL	rlrb rfl	1	33	0.0	0.0	90	3,320
IN	Interior	402	Theunis Dey-Elementary Scl	Hall 2B To Main Lobby	1	2L4' T8 U/EL	trof acr	2	60	0.1	2L2' T8 15w/ELEE HI/RFL	rlrb rfl	2	33	0.1	0.1	195	3,620
IN	Interior	403	Theunis Dey-Elementary Scl	Hall 2B To Main Lobby	1	2L4' T8 32w/EL	trof acr	3	60	0.2	2L4' T8 28w/ELEE LO	rlrb	3	42	0.1	0.1	195	3,620
IN	Interior	404	Theunis Dey-Elementary Scl	Lobby Main	1	2L4' T8 U/EL	trof acr	6	60	0.4	2L2' T8 15w/ELEE HI/RFL	rlrb rfl	6	33	0.2	0.2	586	3,620
IN	Interior	405	Theunis Dey-Elementary Scl	Office Open Main	1	3L4' T8 32w/EL	trof parabolic	6	88	0.5	2L4' T8 28w/ELEE HI/RFL	rlrb rfl	6	64	0.4	0.1	392	2,720
IN	Interior	406	Theunis Dey-Elementary Scl	Office Copy	1	4L4' T8 32w/EL	trof acr	2	112	0.2	2L4' T8 28w/ELEE HI/RFL	rlrb rfl	2	64	0.1	0.1	223	2,320
IN	Interior	407	Theunis Dey-Elementary Scl	Office Principal	1	4L4' T8 32w/EL	trof acr	4	112	0.4	2L4' T8 28w/ELEE HI/RFL	rlrb rfl	4	64	0.3	0.2	445	2,320
IN	Interior	408	Theunis Dey-Elementary Scl	Office Nurse	1	4L4' T8 32w/EL-8'	old wrap	2	112	0.2	2L4' T8 28w/ELEE HI/NEW-8'	new wrap	2	64	0.1	0.1	223	2,320
IN	Interior	409	Theunis Dey-Elementary Scl	Office Nurse	1	2L4' T8 32w/EL	old wrap	2	60	0.1	1L4' T8 28w/ELEE HI/NEW	new wrap	2	33	0.1	0.1	125	2,320
IN	Interior	410	Theunis Dey-Elementary Scl	Bath Nurse	1	13W COMPACT HARDWI	can rec 6"	1	15	0.0	NO RETRO	no change needed		15	0.0			3,320
IN	Interior	411	Theunis Dey-Elementary Scl	Office 22	1	2L4' T8 32w/EL	wrap	1	60	0.1	1L4' T8 28w/ELEE HI/NEW	new wrap	1	33	0.0	0.0	63	2,320
IN	Interior	412	Theunis Dey-Elementary Scl	Office 22	1	2L4' T12 EE/EEMAG	wrap	2	70	0.1	1L4' T8 28w/ELEE HI/NEW	new wrap	2	33	0.1	0.1	172	2,320
IN	Interior	413	Theunis Dey-Elementary Scl	Lounge Staff	1	4L4' T12 EE/EEMAG-8'	old wrap	4	140	0.6	2L4' T8 28w/ELEE HI/NEW-8'	new wrap	4	64	0.3	0.3	766	2,520
IN	Interior	414	Theunis Dey-Elementary Scl	Lounge Staff	1	2L4' T12 EE/EEMAG	old wrap	2	70	0.1	1L4' T8 28w/ELEE HI/NEW	new wrap	2	33	0.1	0.1	186	2,520
IN	Interior	415	Theunis Dey-Elementary Scl	Storage Staff Lounge	1	2x60W INCANDESCENTS	old drum	1	120	0.1	2L2' T8 15w/ELEE LO/NEW	new wrap	1	24	0.0	0.1	48	500
IN	Interior	416	Theunis Dey-Elementary Scl	Bath Women	1	2L4' T8 U/EL	trof acr	3	60	0.2	2L2' T8 15w/ELEE HI/RFL	rlrb rfl	3	33	0.1	0.1	269	3,320
IN	Interior	417	Theunis Dey-Elementary Scl	Bath Women	1	3x13W COMPACT HARDV	drum	1	45	0.0	NO RETRO	no change needed		45	0.0			3,320
IN	Interior	418	Theunis Dey-Elementary Scl	Closet Clean	1	2L4' T8 32w/EL	trof acr	1	60	0.1	2L4' T8 28w/ELEE LO	rlrb	1	42	0.0	0.0	9	500
IN	Interior	419	Theunis Dey-Elementary Scl	Bath Boys	1	2L4' T8 U/EL	trof acr	4	60	0.2	2L2' T8 15w/ELEE HI/RFL	rlrb rfl	4	33	0.1	0.1	359	3,320
IN	Interior	420	Theunis Dey-Elementary Scl	Storage Gym	1	2L4' T12 EE/EEMAG	wrap	1	70	0.1	1L4' T8 28w/ELEE HI/NEW	new wrap	1	33	0.0	0.0	78	2,120
IN	Interior	421	Theunis Dey-Elementary Scl	Storage Gym	1	4L4' T8 32w/EL-8'	wrap	1	112	0.1	2L4' T8 28w/ELEE HI/NEW-8'	new wrap	1	64	0.1	0.0	102	2,120
IN	Interior	422	Theunis Dey-Elementary Scl	Storage Gym	1	1L4' T12 EE/EEMAG	wrap narrow	1	40	0.0	1L4' T8 28w/ELEE LO	rlrb	1	22	0.0	0.0	38	2,120
IN	Interior	423	Theunis Dey-Elementary Scl	Storage Gym	1	2L4' T8 32w/EL	strip reflector	1	60	0.1	2L4' T8 28w/ELEE LO	rlrb	1	42	0.0	0.0	38	2,120
IN	Interior	424	Theunis Dey-Elementary Scl	Classroom 13	1	4L4' T12 EE/EEMAG-8'	wrap	4	140	0.6	2L4' T8 28w/ELEE HI/NEW-8'	new wrap	4	64	0.3	0.3	766	2,520
IN	Interior	425	Theunis Dey-Elementary Scl	Classroom 13	1	2L4' T12 EE/EEMAG	wrap	2	70	0.1	1L4' T8 28w/ELEE HI/NEW	new wrap	2	33	0.1	0.1	186	2,520
IN	Interior	426	Theunis Dey-Elementary Scl	Classroom 13	1	4L4' T12 EE/EEMAG-8'	wrap	2	140	0.3	2L4' T8 28w/ELEE HI/NEW-8'	new wrap	2	64	0.1	0.2	383	2,520
IN	Interior	427	Theunis Dey-Elementary Scl	Classroom 13	1	2L4' T12 EE/EEMAG	wrap	1	70	0.1	1L4' T8 28w/ELEE HI/NEW	new wrap	1	33	0.0	0.0	93	2,520
IN	Interior	428	Theunis Dey-Elementary Scl	Bath 13	1	32W CIRCLELINE HARDV	drum	1	34	0.0	2L2' T8 15w/ELEE LO/NEW	new wrap	1	24	0.0	0.0	33	3,320
IN	Interior	429	Theunis Dey-Elementary Scl	Classroom 14	1	4L4' T12 EE/EEMAG-8'	wrap	4	140	0.6	2L4' T8 28w/ELEE HI/NEW-8'	new wrap	4	64	0.3	0.3	766	2,520
IN	Interior	430	Theunis Dey-Elementary Scl	Classroom 14	1	2L4' T12 EE/EEMAG	wrap	2	70	0.1	1L4' T8 28w/ELEE HI/NEW	new wrap	2	33	0.1	0.1	186	2,520
IN	Interior	431	Theunis Dey-Elementary Scl	Classroom 14	1	4L4' T12 EE/EEMAG-8'	wrap	2	140	0.3	2L4' T8 28w/ELEE HI/NEW-8'	new wrap	2	64	0.1	0.2	383	2,520
IN	Interior	432	Theunis Dey-Elementary Scl	Classroom 14	1	2L4' T12 EE/EEMAG	wrap	1	70	0.1	1L4' T8 28w/ELEE HI/NEW	new wrap	1	33	0.0	0.0	93	2,520

In or Out	ECM	Line	Building Name	Location	Fl	Pre Fixture Description	Pre Fixture Style	Pre Qty	Pre Watts	Pre kW	Post Fixture Description	Post Fixture Style	Post Qty	Post Watts	Post kW	kW Saved	kWH Saved	Annual Hours
IN	Interior	433	Theunis Dey-Elementary Sch	Bath 14	1	32W CIRCLELINE HARDW	drum	1	34	0.0	2L2' T8 15w/ELEE LO/NEW	new wrap	1	24	0.0	0.0	33	3,320
IN	Interior	434	Theunis Dey-Elementary Sch	Classroom 15	1	4L4' T12 EE/EEMAG-8'	wrap	6	140	0.8	2L4' T8 28w/ELEE HI/NEW-8'	new wrap	6	64	0.4	0.5	1,149	2,520
IN	Interior	435	Theunis Dey-Elementary Sch	Classroom 15	1	2L4' T12 EE/EEMAG	wrap	3	70	0.2	1L4' T8 28w/ELEE HI/NEW	new wrap	3	33	0.1	0.1	280	2,520
IN	Interior	436	Theunis Dey-Elementary Sch	Classroom 15	1	4L4' T12 EE/EEMAG-8'	wrap	3	140	0.4	2L4' T8 28w/ELEE HI/NEW-8'	new wrap	3	64	0.2	0.2	575	2,520
IN	Interior	437	Theunis Dey-Elementary Sch	Classroom 15	1	2L4' T12 EE/EEMAG	wrap	3	70	0.2	1L4' T8 28w/ELEE HI/NEW	new wrap	3	33	0.1	0.1	280	2,520
IN	Interior	438	Theunis Dey-Elementary Sch	Bath 15	1	32W CIRCLELINE HARDW	drum	1	34	0.0	2L2' T8 15w/ELEE LO/NEW	new wrap	1	24	0.0	0.0	33	3,320
IN	Interior	439	Theunis Dey-Elementary Sch	Gym 16 Multipurpose	1	4L4' T12 EE/EEMAG-8'	box acr 1' wide	6	140	0.8	4L4' T8 28w/ELEE LO-8'	rlrb	6	83	0.5	0.3	999	2,920
IN	Interior	440	Theunis Dey-Elementary Sch	Classroom 16	1	2L4' T12 EE/EEMAG	wrap	3	70	0.2	1L4' T8 28w/ELEE HI/NEW	new wrap	3	33	0.1	0.1	280	2,520
IN	Interior	441	Theunis Dey-Elementary Sch	Classroom 16	1	4L4' T12 EE/EEMAG-8'	wrap	3	140	0.4	2L4' T8 28w/ELEE HI/NEW-8'	new wrap	3	64	0.2	0.2	575	2,520
IN	Interior	442	Theunis Dey-Elementary Sch	Classroom 16	1	2L4' T12 EE/EEMAG	wrap	3	70	0.2	1L4' T8 28w/ELEE HI/NEW	new wrap	3	33	0.1	0.1	280	2,520
IN	Interior	443	Theunis Dey-Elementary Sch	Bath 16	1	32W CIRCLELINE HARDW	drum	1	34	0.0	2L2' T8 15w/ELEE LO/NEW	new wrap	1	24	0.0	0.0	33	3,320
IN	Interior	444	Theunis Dey-Elementary Sch	Closet Electrical	1	100W INCANDESCENT	jar	1	100	0.1	23W COMPACT SI/29712/CF23	screw in	1	23	0.0	0.1	39	500
IN	Interior	445	Theunis Dey-Elementary Sch	Hall By 17	1	4L4' T12 EE/EEMAG-8'	old wrap	2	140	0.3	2L4' T8 28w/ELEE HI/NEW-8'	new wrap	2	64	0.1	0.2	550	3,620
IN	Interior	446	Theunis Dey-Elementary Sch	Hall By 17	1	2x60W INCANDESCENTS	old drum	1	120	0.1	2L2' T8 15w/ELEE LO/NEW	new wrap	1	24	0.0	0.1	348	3,620
IN	Interior	447	Theunis Dey-Elementary Sch	Classroom 17	1	4L4' T12 EE/EEMAG-8'	wrap	6	140	0.8	2L4' T8 28w/ELEE HI/NEW-8'	new wrap	6	64	0.4	0.5	1,149	2,520
IN	Interior	448	Theunis Dey-Elementary Sch	Classroom 17	1	2L4' T12 EE/EEMAG	wrap	3	70	0.2	1L4' T8 28w/ELEE HI/NEW	new wrap	3	33	0.1	0.1	280	2,520
IN	Interior	449	Theunis Dey-Elementary Sch	Classroom 17	1	4L4' T12 EE/EEMAG-8'	wrap	3	140	0.4	2L4' T8 28w/ELEE HI/NEW-8'	new wrap	3	64	0.2	0.2	575	2,520
IN	Interior	450	Theunis Dey-Elementary Sch	Classroom 17	1	2L4' T12 EE/EEMAG	wrap	3	70	0.2	1L4' T8 28w/ELEE HI/NEW	new wrap	3	33	0.1	0.1	280	2,520
IN	Interior	451	Theunis Dey-Elementary Sch	Bath 17	1	32W CIRCLELINE HARDW	drum	1	34	0.0	2L2' T8 15w/ELEE LO/NEW	new wrap	1	24	0.0	0.0	33	3,320
IN	Interior	452	Theunis Dey-Elementary Sch	Classroom 18	1	4L4' T12 EE/EEMAG-8'	wrap	4	140	0.6	2L4' T8 28w/ELEE HI/NEW-8'	new wrap	4	64	0.3	0.3	766	2,520
IN	Interior	453	Theunis Dey-Elementary Sch	Classroom 18	1	2L4' T12 EE/EEMAG	wrap	2	70	0.1	1L4' T8 28w/ELEE HI/NEW	new wrap	2	33	0.1	0.1	186	2,520
IN	Interior	454	Theunis Dey-Elementary Sch	Classroom 18	1	4L4' T12 EE/EEMAG-8'	wrap	2	140	0.3	2L4' T8 28w/ELEE HI/NEW-8'	new wrap	2	64	0.1	0.2	383	2,520
IN	Interior	455	Theunis Dey-Elementary Sch	Classroom 18	1	2L4' T12 EE/EEMAG	wrap	1	70	0.1	1L4' T8 28w/ELEE HI/NEW	new wrap	1	33	0.0	0.0	93	2,520
IN	Interior	456	Theunis Dey-Elementary Sch	Bath 18	1	32W CIRCLELINE HARDW	drum	1	34	0.0	2L2' T8 15w/ELEE LO/NEW	new wrap	1	24	0.0	0.0	33	3,320
IN	Interior	457	Theunis Dey-Elementary Sch	Classroom 19	1	4L4' T12 EE/EEMAG-8'	wrap	4	140	0.6	2L4' T8 28w/ELEE HI/NEW-8'	new wrap	4	64	0.3	0.3	766	2,520
IN	Interior	458	Theunis Dey-Elementary Sch	Classroom 19	1	2L4' T12 EE/EEMAG	wrap	2	70	0.1	1L4' T8 28w/ELEE HI/NEW	new wrap	2	33	0.1	0.1	186	2,520
IN	Interior	459	Theunis Dey-Elementary Sch	Classroom 19	1	4L4' T12 EE/EEMAG-8'	wrap	2	140	0.3	2L4' T8 28w/ELEE HI/NEW-8'	new wrap	2	64	0.1	0.2	383	2,520
IN	Interior	460	Theunis Dey-Elementary Sch	Classroom 19	1	2L4' T12 EE/EEMAG	wrap	1	70	0.1	1L4' T8 28w/ELEE HI/NEW	new wrap	1	33	0.0	0.0	93	2,520
IN	Interior	461	Theunis Dey-Elementary Sch	Bath 19	1	32W CIRCLELINE HARDW	drum	1	34	0.0	2L2' T8 15w/ELEE LO/NEW	new wrap	1	24	0.0	0.0	33	3,320
IN	Interior	462	Theunis Dey-Elementary Sch	Classroom 20	1	4L4' T12 EE/EEMAG-8'	wrap	4	140	0.6	2L4' T8 28w/ELEE HI/NEW-8'	new wrap	4	64	0.3	0.3	766	2,520
IN	Interior	463	Theunis Dey-Elementary Sch	Classroom 20	1	2L4' T12 EE/EEMAG	wrap	2	70	0.1	1L4' T8 28w/ELEE HI/NEW	new wrap	2	33	0.1	0.1	186	2,520
IN	Interior	464	Theunis Dey-Elementary Sch	Classroom 20	1	4L4' T12 EE/EEMAG-8'	wrap	2	140	0.3	2L4' T8 28w/ELEE HI/NEW-8'	new wrap	2	64	0.1	0.2	383	2,520
IN	Interior	465	Theunis Dey-Elementary Sch	Classroom 20	1	2L4' T12 EE/EEMAG	wrap	1	70	0.1	1L4' T8 28w/ELEE HI/NEW	new wrap	1	33	0.0	0.0	93	2,520
IN	Interior	466	Theunis Dey-Elementary Sch	Bath 20	1	32W CIRCLELINE HARDW	drum	1	34	0.0	2L2' T8 15w/ELEE LO/NEW	new wrap	1	24	0.0	0.0	33	3,320
IN	Interior	467	Theunis Dey-Elementary Sch	Classroom 21	1	4L4' T12 EE/EEMAG-8'	wrap	4	140	0.6	2L4' T8 28w/ELEE HI/NEW-8'	new wrap	4	64	0.3	0.3	766	2,520
IN	Interior	468	Theunis Dey-Elementary Sch	Classroom 21	1	2L4' T12 EE/EEMAG	wrap	2	70	0.1	1L4' T8 28w/ELEE HI/NEW	new wrap	2	33	0.1	0.1	186	2,520
IN	Interior	469	Theunis Dey-Elementary Sch	Classroom 21	1	4L4' T12 EE/EEMAG-8'	wrap	2	140	0.3	2L4' T8 28w/ELEE HI/NEW-8'	new wrap	2	64	0.1	0.2	383	2,520
IN	Interior	470	Theunis Dey-Elementary Sch	Classroom 21	1	2L4' T12 EE/EEMAG	wrap	1	70	0.1	1L4' T8 28w/ELEE HI/NEW	new wrap	1	33	0.0	0.0	93	2,520
IN	Interior	471	Theunis Dey-Elementary Sch	Bath 21	1	32W CIRCLELINE HARDW	drum	1	34	0.0	2L2' T8 15w/ELEE LO/NEW	new wrap	1	24	0.0	0.0	33	3,320
IN	Interior	472	Theunis Dey-Elementary Sch	Gym Main	1	2L4' T8 32w/EL	box acr 1' wide	48	60	2.9	2L4' T8 28w/ELEE LO	rlrb	48	42	2.0	0.9	2,523	2,920
IN	Interior	473	Theunis Dey-Elementary Sch	Office Custodial	1	3L4' T12 EE/EEMAG	industrial	3	110	0.3	3L4' T8 28w/ELEE LO	rlrb	3	63	0.2	0.1	327	2,320
IN	Interior	474	Theunis Dey-Elementary Sch	Office Custodial	1	3L4' T8 32w/EL	industrial	1	88	0.1	3L4' T8 28w/ELEE LO	rlrb	1	63	0.1	0.0	58	2,320
IN	Interior	475	Theunis Dey-Elementary Sch	Mechanical Boiler	1	2L4' T8 32w/EL	strip reflector	7	60	0.4	2L4' T8 28w/ELEE LO	rlrb	7	42	0.3	0.1	63	500
IN	Interior	476	Theunis Dey-Elementary Sch	Hall Custodial Office To Main Lol	1	2L4' T8 U/EL	trof acr	8	60	0.5	2L2' T8 15w/ELEE HI/RFL	rlrb rfl	8	33	0.3	0.2	782	3,620
IN	Interior	477	Theunis Dey-Elementary Sch	Kitchen Prep Area	1	2L4' T8 U/EL	old wrap	29	60	1.7	2L4' T8 28w/ELEE LO/NEW	new wrap	29	42	1.2	0.5	1,002	1,920
IN	Interior	478	Theunis Dey-Elementary Sch	Kitchen Prep Area	1	60W INCANDESCENT	keyless	1	60	0.1	23W COMPACT SI/29712/CF23	screw in	1	23	0.0	0.0	71	1,920
IN	Interior	479	Theunis Dey-Elementary Sch	Kitchen Prep Area	1	2x13W COMPACT HARDW	old vanity	1	30	0.0	NO RETRO	no change needed		30	0.0			1,920
IN	Interior	480	Theunis Dey-Elementary Sch	Kitchen Grease Hood	1	100W INCANDESCENT	jar	2	100	0.2	23W COMPACT SI/29712/CF23	screw in	2	23	0.0	0.2	296	1,920

In or Out	ECM	Line	Building Name	Location	Fl	Pre Fixture Description	Pre Fixture Style	Pre Qty	Pre Watts	Pre kW	Post Fixture Description	Post Fixture Style	Post Qty	Post Watts	Post kW	kW Saved	kWH Saved	Annual Hours
IN	Interior	481	Theunis Dey-Elementary Sch	Storage Dry Goods	1	2L4' T8 U/EL	box acrylic	4	60	0.2	2L2' T8 15w/ELEE HI/RFL	rlrb rfl	4	33	0.1	0.1	229	2,120
IN	Interior	482	Theunis Dey-Elementary Sch	Office By Nurse	1	2L4' T12 EE/EEMAG	wrap	2	70	0.1	1L4' T8 28w/ELEE HI/NEW	new wrap	2	33	0.1	0.1	172	2,320
IN	Interior	483	Theunis Dey-Elementary Sch	Cafeteria Multipurpose	1	150W METAL HALIDE	lowbay	17	190	3.2	NO RETRO	no change		190	3.2			2,720
IN	Interior	484	Theunis Dey-Elementary Sch	Storage Tables	1	60W INCANDESCENT	keyless	2	60	0.1	23W COMPACT SI/29712/CF23	screw in	2	23	0.0	0.1	37	500
IN	Interior	485	Theunis Dey-Elementary Sch	Classroom 12	1	4L4' T12 EE/EEMAG-8'	wrap	4	140	0.6	2L4' T8 28w/ELEE HI/NEW-8'	new wrap	4	64	0.3	0.3	766	2,520
IN	Interior	486	Theunis Dey-Elementary Sch	Classroom 12	1	2L4' T12 EE/EEMAG	wrap	2	70	0.1	1L4' T8 28w/ELEE HI/NEW	new wrap	2	33	0.1	0.1	186	2,520
IN	Interior	487	Theunis Dey-Elementary Sch	Classroom 12	1	4L4' T12 EE/EEMAG-8'	wrap	2	140	0.3	2L4' T8 28w/ELEE HI/NEW-8'	new wrap	2	64	0.1	0.2	383	2,520
IN	Interior	488	Theunis Dey-Elementary Sch	Classroom 12	1	2L4' T12 EE/EEMAG	wrap	1	70	0.1	1L4' T8 28w/ELEE HI/NEW	new wrap	1	33	0.0	0.0	93	2,520
IN	Interior	489	Theunis Dey-Elementary Sch	Bath 12	1	32W CIRCLELINE HARDW	drum	1	34	0.0	2L2' T8 15w/ELEE LO/NEW	new wrap	1	24	0.0	0.0	33	3,320
IN	Interior	490	Theunis Dey-Elementary Sch	Classroom 11	1	4L4' T12 EE/EEMAG-8'	wrap	4	140	0.6	2L4' T8 28w/ELEE HI/NEW-8'	new wrap	4	64	0.3	0.3	766	2,520
IN	Interior	491	Theunis Dey-Elementary Sch	Classroom 11	1	2L4' T12 EE/EEMAG	wrap	2	70	0.1	1L4' T8 28w/ELEE HI/NEW	new wrap	2	33	0.1	0.1	186	2,520
IN	Interior	492	Theunis Dey-Elementary Sch	Classroom 11	1	4L4' T12 EE/EEMAG-8'	wrap	2	140	0.3	2L4' T8 28w/ELEE HI/NEW-8'	new wrap	2	64	0.1	0.2	383	2,520
IN	Interior	493	Theunis Dey-Elementary Sch	Classroom 11	1	2L4' T12 EE/EEMAG	wrap	1	70	0.1	1L4' T8 28w/ELEE HI/NEW	new wrap	1	33	0.0	0.0	93	2,520
IN	Interior	494	Theunis Dey-Elementary Sch	Bath 11	1	32W CIRCLELINE HARDW	drum	1	34	0.0	2L2' T8 15w/ELEE LO/NEW	new wrap	1	24	0.0	0.0	33	3,320
IN	Interior	495	Theunis Dey-Elementary Sch	Classroom 10	1	4L4' T12 EE/EEMAG-8'	wrap	4	140	0.6	2L4' T8 28w/ELEE HI/NEW-8'	new wrap	4	64	0.3	0.3	766	2,520
IN	Interior	496	Theunis Dey-Elementary Sch	Classroom 10	1	2L4' T12 EE/EEMAG	wrap	2	70	0.1	1L4' T8 28w/ELEE HI/NEW	new wrap	2	33	0.1	0.1	186	2,520
IN	Interior	497	Theunis Dey-Elementary Sch	Classroom 10	1	4L4' T12 EE/EEMAG-8'	wrap	2	140	0.3	2L4' T8 28w/ELEE HI/NEW-8'	new wrap	2	64	0.1	0.2	383	2,520
IN	Interior	498	Theunis Dey-Elementary Sch	Classroom 10	1	2L4' T12 EE/EEMAG	wrap	1	70	0.1	1L4' T8 28w/ELEE HI/NEW	new wrap	1	33	0.0	0.0	93	2,520
IN	Interior	499	Theunis Dey-Elementary Sch	Bath 10	1	32W CIRCLELINE HARDW	drum	1	34	0.0	2L2' T8 15w/ELEE LO/NEW	new wrap	1	24	0.0	0.0	33	3,320
IN	Interior	500	Theunis Dey-Elementary Sch	Classroom 9	1	4L4' T12 EE/EEMAG-8'	wrap	4	140	0.6	2L4' T8 28w/ELEE HI/NEW-8'	new wrap	4	64	0.3	0.3	766	2,520
IN	Interior	501	Theunis Dey-Elementary Sch	Classroom 9	1	2L4' T12 EE/EEMAG	wrap	2	70	0.1	1L4' T8 28w/ELEE HI/NEW	new wrap	2	33	0.1	0.1	186	2,520
IN	Interior	502	Theunis Dey-Elementary Sch	Classroom 9	1	4L4' T12 EE/EEMAG-8'	wrap	2	140	0.3	2L4' T8 28w/ELEE HI/NEW-8'	new wrap	2	64	0.1	0.2	383	2,520
IN	Interior	503	Theunis Dey-Elementary Sch	Classroom 9	1	2L4' T12 EE/EEMAG	wrap	1	70	0.1	1L4' T8 28w/ELEE HI/NEW	new wrap	1	33	0.0	0.0	93	2,520
IN	Interior	504	Theunis Dey-Elementary Sch	Classroom 8	1	4L4' T12 EE/EEMAG-8'	wrap	4	140	0.6	2L4' T8 28w/ELEE HI/NEW-8'	new wrap	4	64	0.3	0.3	766	2,520
IN	Interior	505	Theunis Dey-Elementary Sch	Classroom 8	1	2L4' T12 EE/EEMAG	wrap	2	70	0.1	1L4' T8 28w/ELEE HI/NEW	new wrap	2	33	0.1	0.1	186	2,520
IN	Interior	506	Theunis Dey-Elementary Sch	Classroom 8	1	4L4' T12 EE/EEMAG-8'	wrap	2	140	0.3	2L4' T8 28w/ELEE HI/NEW-8'	new wrap	2	64	0.1	0.2	383	2,520
IN	Interior	507	Theunis Dey-Elementary Sch	Classroom 8	1	2L4' T12 EE/EEMAG	wrap	1	70	0.1	1L4' T8 28w/ELEE HI/NEW	new wrap	1	33	0.0	0.0	93	2,520
IN	Interior	508	Theunis Dey-Elementary Sch	Classroom 7	1	4L4' T12 EE/EEMAG-8'	wrap	4	140	0.6	2L4' T8 28w/ELEE HI/NEW-8'	new wrap	4	64	0.3	0.3	766	2,520
IN	Interior	509	Theunis Dey-Elementary Sch	Classroom 7	1	2L4' T12 EE/EEMAG	wrap	2	70	0.1	1L4' T8 28w/ELEE HI/NEW	new wrap	2	33	0.1	0.1	186	2,520
IN	Interior	510	Theunis Dey-Elementary Sch	Classroom 7	1	4L4' T12 EE/EEMAG-8'	wrap	2	140	0.3	2L4' T8 28w/ELEE HI/NEW-8'	new wrap	2	64	0.1	0.2	383	2,520
IN	Interior	511	Theunis Dey-Elementary Sch	Classroom 7	1	2L4' T12 EE/EEMAG	wrap	1	70	0.1	1L4' T8 28w/ELEE HI/NEW	new wrap	1	33	0.0	0.0	93	2,520
IN	Interior	512	Theunis Dey-Elementary Sch	Classroom 7A	1	3L4' T12 EE/EEMAG	trof acrylic dbl swi	6	110	0.7	2L4' T8 28w/ELEE HI/RFL	rlrb RT8 kit	6	64	0.4	0.3	696	2,520
IN	Interior	513	Theunis Dey-Elementary Sch	Classroom 7B	1	3L4' T12 EE/EEMAG	trof acrylic dbl swi	6	110	0.7	2L4' T8 28w/ELEE HI/RFL	rlrb RT8 kit	6	64	0.4	0.3	696	2,520
IN	Interior	514	Theunis Dey-Elementary Sch	Library	1	2L4' T12 EE/EEMAG	trof para 1' wide	30	70	2.1	2L4' T8 28w/ELEE LO	rlrb	30	42	1.3	0.8	2,117	2,520
IN	Interior	515	Theunis Dey-Elementary Sch	Library	1	2L4' T12 EE/EEMAG	old wrap	10	70	0.7	1L4' T8 28w/ELEE HI/NEW	new wrap	10	33	0.3	0.4	932	2,520
IN	Interior	516	Theunis Dey-Elementary Sch	Library	1	4L4' T12 EE/EEMAG	old wrap	4	140	0.6	2L4' T8 28w/ELEE HI/NEW	new wrap wide	4	64	0.3	0.3	766	2,520
IN	Interior	517	Theunis Dey-Elementary Sch	Office Library	1	3L4' T12 EE/EEMAG	trof acr	4	110	0.4	3L4' T8 28w/ELEE LO	rlrb	4	63	0.3	0.2	436	2,320
IN	Interior	518	Theunis Dey-Elementary Sch	Storage It	1	4L4' T12 EE/EEMAG	wrap	2	140	0.3	2L4' T8 28w/ELEE HI/NEW	new wrap wide	2	64	0.1	0.2	322	2,120
IN	Interior	519	Theunis Dey-Elementary Sch	Bath Boys	1	3x13W COMPACT HARDW	drum	1	45	0.0	NO RETRO	no change needed		45	0.0			3,320
IN	Interior	520	Theunis Dey-Elementary Sch	Bath Boys	1	2L4' T8 U/EL	trof acr	2	60	0.1	2L2' T8 15w/ELEE HI/RFL	rlrb rfl	2	33	0.1	0.1	179	3,320
IN	Interior	521	Theunis Dey-Elementary Sch	Bath Staff	1	3x13W COMPACT HARDW	drum	2	45	0.1	NO RETRO	no change needed		45	0.1			3,320
IN	Interior	522	Theunis Dey-Elementary Sch	Stage	1	2L8' T12 HO STD/EL	strip	4	195	0.8	4L4' T8 28w/ELEE HI/STRIP KIT	rlrb strip kit	4	126	0.5	0.3	640	2,320
IN	Interior	523	Theunis Dey-Elementary Sch	Mechanical Air Handler	1	60W INCANDESCENT	jar	1	60	0.1	23W COMPACT SI/29712/CF23	screw in	1	23	0.0	0.0	19	500
IN	Interior	524	Theunis Dey-Elementary Sch	Bath Girls	1	3x13W COMPACT HARDW	drum	1	45	0.0	NO RETRO	no change needed		45	0.0			3,320
IN	Interior	525	Theunis Dey-Elementary Sch	Bath Girls	1	2L4' T8 U/EL	trof acr	2	60	0.1	2L2' T8 15w/ELEE HI/RFL	rlrb rfl	2	33	0.1	0.1	179	3,320
IN	Interior	526	Theunis Dey-Elementary Sch	Hall 8 To 9	1	2L4' T8 U/EL	trof acr	3	60	0.2	2L2' T8 15w/ELEE HI/RFL	rlrb rfl	3	33	0.1	0.1	293	3,620
IN	Interior	527	Theunis Dey-Elementary Sch	Hall 8 To 9	1	2L4' T12 EE/EEMAG	wrap	1	70	0.1	1L4' T8 28w/ELEE HI/NEW	new wrap	1	33	0.0	0.0	134	3,620
IN	Interior	528	Theunis Dey-Elementary Sch	Classroom 6B	1	3L4' T12 EE/EEMAG	trof acrylic dbl swi	6	110	0.7	2L4' T8 28w/ELEE HI/RFL	rlrb RT8 kit	6	64	0.4	0.3	696	2,520

In or Out	ECM	Line	Building Name	Location	Fl	Pre Fixture Description	Pre Fixture Style	Pre Qty	Pre Watts	Pre kW	Post Fixture Description	Post Fixture Style	Post Qty	Post Watts	Post kW	kW Saved	kWH Saved	Annual Hours
IN	Interior	529	Theunis Dey-Elementary Sch	Classroom 6A	1	3L4' T12 EE/EEMAG	trof acrylic dbl swi	6	110	0.7	2L4' T8 28w/ELEE HI/RFL	rlrb RT8 kit	6	64	0.4	0.3	696	2,520
IN	Interior	530	Theunis Dey-Elementary Sch	Classroom 6	1	4L4' T12 EE/EEMAG-8'	wrap	4	140	0.6	2L4' T8 28w/ELEE HI/NEW-8'	new wrap	4	64	0.3	0.3	766	2,520
IN	Interior	531	Theunis Dey-Elementary Sch	Classroom 6	1	2L4' T12 EE/EEMAG	wrap	2	70	0.1	1L4' T8 28w/ELEE HI/NEW	new wrap	2	33	0.1	0.1	186	2,520
IN	Interior	532	Theunis Dey-Elementary Sch	Classroom 6	1	4L4' T12 EE/EEMAG-8'	wrap	2	140	0.3	2L4' T8 28w/ELEE HI/NEW-8'	new wrap	2	64	0.1	0.2	383	2,520
IN	Interior	533	Theunis Dey-Elementary Sch	Classroom 6	1	2L4' T12 EE/EEMAG	wrap	1	70	0.1	1L4' T8 28w/ELEE HI/NEW	new wrap	1	33	0.0	0.0	93	2,520
IN	Interior	534	Theunis Dey-Elementary Sch	Classroom 5	1	4L4' T12 EE/EEMAG-8'	wrap	4	140	0.6	2L4' T8 28w/ELEE HI/NEW-8'	new wrap	4	64	0.3	0.3	766	2,520
IN	Interior	535	Theunis Dey-Elementary Sch	Classroom 5	1	2L4' T12 EE/EEMAG	wrap	2	70	0.1	1L4' T8 28w/ELEE HI/NEW	new wrap	2	33	0.1	0.1	186	2,520
IN	Interior	536	Theunis Dey-Elementary Sch	Classroom 5	1	4L4' T12 EE/EEMAG-8'	wrap	2	140	0.3	2L4' T8 28w/ELEE HI/NEW-8'	new wrap	2	64	0.1	0.2	383	2,520
IN	Interior	537	Theunis Dey-Elementary Sch	Classroom 5	1	2L4' T12 EE/EEMAG	wrap	1	70	0.1	1L4' T8 28w/ELEE HI/NEW	new wrap	1	33	0.0	0.0	93	2,520
IN	Interior	538	Theunis Dey-Elementary Sch	Classroom 4	1	4L4' T12 EE/EEMAG-8'	wrap	4	140	0.6	2L4' T8 28w/ELEE HI/NEW-8'	new wrap	4	64	0.3	0.3	766	2,520
IN	Interior	539	Theunis Dey-Elementary Sch	Classroom 4	1	2L4' T12 EE/EEMAG	wrap	2	70	0.1	1L4' T8 28w/ELEE HI/NEW	new wrap	2	33	0.1	0.1	186	2,520
IN	Interior	540	Theunis Dey-Elementary Sch	Classroom 4	1	4L4' T12 EE/EEMAG-8'	wrap	2	140	0.3	2L4' T8 28w/ELEE HI/NEW-8'	new wrap	2	64	0.1	0.2	383	2,520
IN	Interior	541	Theunis Dey-Elementary Sch	Classroom 4	1	2L4' T12 EE/EEMAG	wrap	1	70	0.1	1L4' T8 28w/ELEE HI/NEW	new wrap	1	33	0.0	0.0	93	2,520
IN	Interior	542	Theunis Dey-Elementary Sch	Classroom 3	1	4L4' T12 EE/EEMAG-8'	wrap	4	140	0.6	2L4' T8 28w/ELEE HI/NEW-8'	new wrap	4	64	0.3	0.3	766	2,520
IN	Interior	543	Theunis Dey-Elementary Sch	Classroom 3	1	2L4' T12 EE/EEMAG	wrap	2	70	0.1	1L4' T8 28w/ELEE HI/NEW	new wrap	2	33	0.1	0.1	186	2,520
IN	Interior	544	Theunis Dey-Elementary Sch	Classroom 3	1	4L4' T12 EE/EEMAG-8'	wrap	2	140	0.3	2L4' T8 28w/ELEE HI/NEW-8'	new wrap	2	64	0.1	0.2	383	2,520
IN	Interior	545	Theunis Dey-Elementary Sch	Classroom 3	1	2L4' T12 EE/EEMAG	wrap	1	70	0.1	1L4' T8 28w/ELEE HI/NEW	new wrap	1	33	0.0	0.0	93	2,520
IN	Interior	546	Theunis Dey-Elementary Sch	Bath 3	1	32W CIRCLELINE HARDW	drum	1	34	0.0	2L2' T8 15w/ELEE LO/NEW	new wrap	1	24	0.0	0.0	33	3,320
IN	Interior	547	Theunis Dey-Elementary Sch	Classroom 2	1	4L4' T12 EE/EEMAG-8'	wrap	4	140	0.6	2L4' T8 28w/ELEE HI/NEW-8'	new wrap	4	64	0.3	0.3	766	2,520
IN	Interior	548	Theunis Dey-Elementary Sch	Classroom 2	1	2L4' T12 EE/EEMAG	wrap	2	70	0.1	1L4' T8 28w/ELEE HI/NEW	new wrap	2	33	0.1	0.1	186	2,520
IN	Interior	549	Theunis Dey-Elementary Sch	Classroom 2	1	4L4' T12 EE/EEMAG-8'	wrap	2	140	0.3	2L4' T8 28w/ELEE HI/NEW-8'	new wrap	2	64	0.1	0.2	383	2,520
IN	Interior	550	Theunis Dey-Elementary Sch	Classroom 2	1	2L4' T12 EE/EEMAG	wrap	1	70	0.1	1L4' T8 28w/ELEE HI/NEW	new wrap	1	33	0.0	0.0	93	2,520
IN	Interior	551	Theunis Dey-Elementary Sch	Bath 2	1	32W CIRCLELINE HARDW	drum	1	34	0.0	2L2' T8 15w/ELEE LO/NEW	new wrap	1	24	0.0	0.0	33	3,320
IN	Interior	552	Theunis Dey-Elementary Sch	Classroom 1	1	4L4' T12 EE/EEMAG-8'	wrap	4	140	0.6	2L4' T8 28w/ELEE HI/NEW-8'	new wrap	4	64	0.3	0.3	766	2,520
IN	Interior	553	Theunis Dey-Elementary Sch	Classroom 1	1	2L4' T12 EE/EEMAG	wrap	2	70	0.1	1L4' T8 28w/ELEE HI/NEW	new wrap	2	33	0.1	0.1	186	2,520
IN	Interior	554	Theunis Dey-Elementary Sch	Classroom 1	1	4L4' T12 EE/EEMAG-8'	wrap	2	140	0.3	2L4' T8 28w/ELEE HI/NEW-8'	new wrap	2	64	0.1	0.2	383	2,520
IN	Interior	555	Theunis Dey-Elementary Sch	Classroom 1	1	2L4' T12 EE/EEMAG	wrap	1	70	0.1	1L4' T8 28w/ELEE HI/NEW	new wrap	1	33	0.0	0.0	93	2,520
IN	Interior	556	Theunis Dey-Elementary Sch	Bath 1	1	32W CIRCLELINE HARDW	drum	1	34	0.0	2L2' T8 15w/ELEE LO/NEW	new wrap	1	24	0.0	0.0	33	3,320
IN	Interior	557	Theunis Dey-Elementary Sch	Hall 5 To 4	1	2L4' T12 EE/EEMAG	old wrap	2	70	0.1	1L4' T8 28w/ELEE HI/NEW	new wrap	2	33	0.1	0.1	268	3,620
IN	Interior	558	Theunis Dey-Elementary Sch	Hall 5 To 4	1	2L4' T8 U/EL	trof acr	3	60	0.2	2L2' T8 15w/ELEE HI/RFL	rlrb rfl	3	33	0.1	0.1	293	3,620
IN	Interior	559	Theunis Dey-Elementary Sch	Hall By Class 3	1	2L4' T12 U EE/EEMAG	trof acr	3	70	0.2	2L2' T8 15w/ELEE HI/RFL	rlrb rfl	3	33	0.1	0.1	402	3,620
IN	Exterior	560	Theunis Dey-Elementary Sch	Bldg Mt Fixture 1	ext	50W HI PRESSURE SODI	canopy	10	65	0.7	26 WATT LED/NEW	new LED exterior area lig	10	26	0.3	0.4	1,708	4,380
IN	Exterior	561	Theunis Dey-Elementary Sch	Bldg Mt Fixture 2	ext	3 WATT LED	flood	1	3	0.0	NO RETRO	no change needed		3	0.0			4,380
IN	Exterior	562	Theunis Dey-Elementary Sch	Bldg Mt Fixture 3	ext	3x13W COMPACT HARDW	drum	5	45	0.2	NO RETRO	no change needed		45	0.2			4,380
IN	Exterior	563	Theunis Dey-Elementary Sch	Bldg Mt Fixture 4	ext	250W HI PRESSURE SOD	wallpack	8	295	2.4	133 WATT LED/NEW	new LED wallpack	8	133	1.1	1.3	5,676	4,380
IN	Exterior	564	Theunis Dey-Elementary Sch	Bldg Mt Fixture 5	ext	50W HI PRESSURE SODI	wallpack	1	65	0.1	26 WATT LED/NEW	new LED wallpack	1	26	0.0	0.0	171	4,380
IN	Interior	565	Randall Carter-Elementary S	Classroom 11	1	4L4' T12 EE/EEMAG-8'	wrap	6	140	0.8	2L4' T8 28w/ELEE HI/NEW-8'	new wrap	6	64	0.4	0.5	1,149	2,520
IN	Interior	566	Randall Carter-Elementary S	Classroom 11	1	4L4' T12 EE/EEMAG-8'	wrap	3	140	0.4	2L4' T8 28w/ELEE HI/NEW-8'	new wrap	3	64	0.2	0.2	575	2,520
IN	Interior	567	Randall Carter-Elementary S	Classroom 11	1	52W INCANDESCENT	square recessed	1	52	0.1	11W COMPACT SI/29708/CF11	screw in	1	11	0.0	0.0	103	2,520
IN	Interior	568	Randall Carter-Elementary S	Classroom 10	1	4L4' T12 EE/EEMAG-8'	wrap	6	140	0.8	2L4' T8 28w/ELEE HI/NEW-8'	new wrap	6	64	0.4	0.5	1,149	2,520
IN	Interior	569	Randall Carter-Elementary S	Classroom 10	1	4L4' T12 EE/EEMAG-8'	wrap	3	140	0.4	2L4' T8 28w/ELEE HI/NEW-8'	new wrap	3	64	0.2	0.2	575	2,520
IN	Interior	570	Randall Carter-Elementary S	Classroom 10	1	52W INCANDESCENT	square recessed	1	52	0.1	11W COMPACT SI/29708/CF11	screw in	1	11	0.0	0.0	103	2,520
IN	Interior	571	Randall Carter-Elementary S	Classroom 12	1	4L4' T12 EE/EEMAG-8'	wrap	6	140	0.8	2L4' T8 28w/ELEE HI/NEW-8'	new wrap	6	64	0.4	0.5	1,149	2,520
IN	Interior	572	Randall Carter-Elementary S	Classroom 12	1	4L4' T12 EE/EEMAG-8'	wrap	3	140	0.4	2L4' T8 28w/ELEE HI/NEW-8'	new wrap	3	64	0.2	0.2	575	2,520
IN	Interior	573	Randall Carter-Elementary S	Classroom 12	1	52W INCANDESCENT	square recessed	1	52	0.1	11W COMPACT SI/29708/CF11	screw in	1	11	0.0	0.0	103	2,520
IN	Interior	574	Randall Carter-Elementary S	Classroom 9	1	4L4' T12 EE/EEMAG-8'	wrap	6	140	0.8	2L4' T8 28w/ELEE HI/NEW-8'	new wrap	6	64	0.4	0.5	1,149	2,520
IN	Interior	575	Randall Carter-Elementary S	Classroom 9	1	4L4' T12 EE/EEMAG-8'	wrap	3	140	0.4	2L4' T8 28w/ELEE HI/NEW-8'	new wrap	3	64	0.2	0.2	575	2,520
IN	Interior	576	Randall Carter-Elementary S	Classroom 9	1	52W INCANDESCENT	square recessed	1	52	0.1	11W COMPACT SI/29708/CF11	screw in	1	11	0.0	0.0	103	2,520

In or Out	ECM	Line	Building Name	Location	Fl	Pre Fixture Description	Pre Fixture Style	Pre Qty	Pre Watts	Pre kW	Post Fixture Description	Post Fixture Style	Post Qty	Post Watts	Post kW	kW Saved	kWH Saved	Annual Hours
IN	Interior	577	Randall Carter-Elementary S	Classroom 13	1	4L4' T12 EE/EEMAG-8'	wrap	6	140	0.8	2L4' T8 28w/ELEE HI/NEW-8'	new wrap	6	64	0.4	0.5	1,149	2,520
IN	Interior	578	Randall Carter-Elementary S	Classroom 13	1	4L4' T12 EE/EEMAG-8'	wrap	3	140	0.4	2L4' T8 28w/ELEE HI/NEW-8'	new wrap	3	64	0.2	0.2	575	2,520
IN	Interior	579	Randall Carter-Elementary S	Classroom 13	1	52W INCANDESCENT	square recessed	1	52	0.1	11W COMPACT SI/29708/CF11	screw in	1	11	0.0	0.0	103	2,520
IN	Interior	580	Randall Carter-Elementary S	Classroom 8	1	4L4' T12 EE/EEMAG-8'	wrap	6	140	0.8	2L4' T8 28w/ELEE HI/NEW-8'	new wrap	6	64	0.4	0.5	1,149	2,520
IN	Interior	581	Randall Carter-Elementary S	Classroom 8	1	4L4' T12 EE/EEMAG-8'	wrap	3	140	0.4	2L4' T8 28w/ELEE HI/NEW-8'	new wrap	3	64	0.2	0.2	575	2,520
IN	Interior	582	Randall Carter-Elementary S	Classroom 8	1	52W INCANDESCENT	square recessed	1	52	0.1	11W COMPACT SI/29708/CF11	screw in	1	11	0.0	0.0	103	2,520
IN	Interior	583	Randall Carter-Elementary S	Classroom 14	1	4L4' T12 EE/EEMAG-8'	wrap	6	140	0.8	2L4' T8 28w/ELEE HI/NEW-8'	new wrap	6	64	0.4	0.5	1,149	2,520
IN	Interior	584	Randall Carter-Elementary S	Classroom 14	1	4L4' T12 EE/EEMAG-8'	wrap	3	140	0.4	2L4' T8 28w/ELEE HI/NEW-8'	new wrap	3	64	0.2	0.2	575	2,520
IN	Interior	585	Randall Carter-Elementary S	Classroom 14	1	52W INCANDESCENT	square recessed	1	52	0.1	11W COMPACT SI/29708/CF11	screw in	1	11	0.0	0.0	103	2,520
IN	Interior	586	Randall Carter-Elementary S	Classroom 7	1	4L4' T12 EE/EEMAG-8'	wrap	6	140	0.8	2L4' T8 28w/ELEE HI/NEW-8'	new wrap	6	64	0.4	0.5	1,149	2,520
IN	Interior	587	Randall Carter-Elementary S	Classroom 7	1	4L4' T12 EE/EEMAG-8'	wrap	3	140	0.4	2L4' T8 28w/ELEE HI/NEW-8'	new wrap	3	64	0.2	0.2	575	2,520
IN	Interior	588	Randall Carter-Elementary S	Classroom 7	1	52W INCANDESCENT	square recessed	1	52	0.1	11W COMPACT SI/29708/CF11	screw in	1	11	0.0	0.0	103	2,520
IN	Interior	589	Randall Carter-Elementary S	Classroom 15	1	4L4' T12 EE/EEMAG-8'	wrap	6	140	0.8	2L4' T8 28w/ELEE HI/NEW-8'	new wrap	6	64	0.4	0.5	1,149	2,520
IN	Interior	590	Randall Carter-Elementary S	Classroom 15	1	4L4' T12 EE/EEMAG-8'	wrap	3	140	0.4	2L4' T8 28w/ELEE HI/NEW-8'	new wrap	3	64	0.2	0.2	575	2,520
IN	Interior	591	Randall Carter-Elementary S	Classroom 15	1	52W INCANDESCENT	square recessed	1	52	0.1	11W COMPACT SI/29708/CF11	screw in	1	11	0.0	0.0	103	2,520
IN	Interior	592	Randall Carter-Elementary S	Classroom 6	1	4L4' T12 EE/EEMAG-8'	wrap	6	140	0.8	2L4' T8 28w/ELEE HI/NEW-8'	new wrap	6	64	0.4	0.5	1,149	2,520
IN	Interior	593	Randall Carter-Elementary S	Classroom 6	1	4L4' T12 EE/EEMAG-8'	wrap	3	140	0.4	2L4' T8 28w/ELEE HI/NEW-8'	new wrap	3	64	0.2	0.2	575	2,520
IN	Interior	594	Randall Carter-Elementary S	Classroom 6	1	52W INCANDESCENT	square recessed	1	52	0.1	11W COMPACT SI/29708/CF11	screw in	1	11	0.0	0.0	103	2,520
IN	Interior	595	Randall Carter-Elementary S	Hall 6 To 11	1	3L4' T8 32w/EL	trof acr	16	88	1.4	3L4' T8 28w/ELEE LO	rlrb	16	63	1.0	0.4	1,448	3,620
IN	Interior	596	Randall Carter-Elementary S	Office Nurse	1	4L4' T12 EE/EEMAG-8'	wrap	2	140	0.3	2L4' T8 28w/ELEE HI/NEW-8'	new wrap	2	64	0.1	0.2	353	2,320
IN	Interior	597	Randall Carter-Elementary S	Bath Nurse	1	23W COMPACT HARDWI	exhaust fan light	1	24	0.0	NO RETRO	no change needed		24	0.0			3,320
IN	Interior	598	Randall Carter-Elementary S	Storage 15	1	2L4' T12 EE/EEMAG	old wrap	3	70	0.2	1L4' T8 28w/ELEE HI/NEW	new wrap	3	33	0.1	0.1	235	2,120
IN	Interior	599	Randall Carter-Elementary S	Storage 17	1	2L4' T12 EE/EEMAG	old wrap	4	70	0.3	1L4' T8 28w/ELEE HI/NEW	new wrap	4	33	0.1	0.1	314	2,120
IN	Interior	600	Randall Carter-Elementary S	Office Main	1	4L4' T8 32w/EL-8'	old wrap	2	112	0.2	2L4' T8 28w/ELEE HI/NEW-8'	new wrap	2	64	0.1	0.1	223	2,320
IN	Interior	601	Randall Carter-Elementary S	Office Main	1	2L4' T8 32w/EL	old wrap	2	60	0.1	1L4' T8 28w/ELEE HI/NEW	new wrap	2	33	0.1	0.1	125	2,320
IN	Interior	602	Randall Carter-Elementary S	Office Main	1	2L4' T8 U/EL	box acrylic	1	60	0.1	2L2' T8 15w/ELEE HI/RFL	rlrb rfl	1	33	0.0	0.0	63	2,320
IN	Interior	603	Randall Carter-Elementary S	Office Principal	1	4L4' T8 32w/EL-8'	old wrap	2	112	0.2	2L4' T8 28w/ELEE HI/NEW-8'	new wrap	2	64	0.1	0.1	223	2,320
IN	Interior	604	Randall Carter-Elementary S	Stage Main	1	2L8' T12 HO STD/EL	strip	4	195	0.8	4L4' T8 28w/ELEE HI/STRIP KIT	rlrb strip kit	4	126	0.5	0.3	640	2,320
IN	Interior	605	Randall Carter-Elementary S	Stage Main	1	52W INCANDESCENT	dome	3	52	0.2	2L4' T8 28w/ELEE/NEW	new wrap	3	48	0.1	0.0	28	2,320
IN	Interior	606	Randall Carter-Elementary S	Stage Main	1	52W INCANDESCENT	keyless	1	52	0.1	23W COMPACT SI/29712/CF23	screw in	1	23	0.0	0.0	67	2,320
IN	Interior	607	Randall Carter-Elementary S	Gym Main	1	150W METAL HALIDE	lowbay	10	190	1.9	46 WATT LED/NEW	new LED RLE7200 box	10	46	0.5	1.4	4,205	2,920
IN	Interior	608	Randall Carter-Elementary S	Kitchen Prep Area	1	4L4' T12 EE/EEMAG-8'	old wrap	3	140	0.4	4L4' T8 28w/ELEE LO/NEW-8'	new wrap	3	83	0.2	0.2	328	1,920
IN	Interior	609	Randall Carter-Elementary S	Kitchen Grease Hood	1	52W INCANDESCENT	jar	2	52	0.1	23W COMPACT SI/29712/CF23	screw in	2	23	0.0	0.1	111	1,920
IN	Interior	610	Randall Carter-Elementary S	Hall Kitchen	1	2L4' T12 EE/EEMAG	old wrap	1	70	0.1	1L4' T8 28w/ELEE HI/NEW	new wrap	1	33	0.0	0.0	134	3,620
IN	Interior	611	Randall Carter-Elementary S	Storage Dry Goods	1	2L4' T12 EE/EEMAG	old wrap	1	70	0.1	1L4' T8 28w/ELEE HI/NEW	new wrap	1	33	0.0	0.0	78	2,120
IN	Interior	612	Randall Carter-Elementary S	Lounge Staff	1	4L4' T12 EE/EEMAG-8'	old wrap	3	140	0.4	2L4' T8 28w/ELEE HI/NEW-8'	new wrap	3	64	0.2	0.2	575	2,520
IN	Interior	613	Randall Carter-Elementary S	Bath Staff	1	2L4' T8 32w/EL	old vanity	1	60	0.1	2L4' T8 28w/ELEE LO/NEW	new vanity	1	42	0.0	0.0	60	3,320
IN	Interior	614	Randall Carter-Elementary S	Bath Staff	1	13W COMPACT HARDWI	old drum	1	15	0.0	NO RETRO	no change needed		15	0.0			3,320
IN	Interior	615	Randall Carter-Elementary S	Bath Staff	1	2L4' T8 32w/EL	old wrap	1	60	0.1	1L4' T8 28w/ELEE HI/NEW	new wrap	1	33	0.0	0.0	90	3,320
IN	Interior	616	Randall Carter-Elementary S	Bath Staff	1	23W COMPACT HARDWI	decorative	2	24	0.0	NO RETRO	no change needed		24	0.0			3,320
IN	Interior	617	Randall Carter-Elementary S	Hall Custodian	1	2L2' T8 17w/EL	wrap narrow	1	33	0.0	2L2' T8 15w/ELEE LO	rlrb	1	27	0.0	0.0	22	3,620
IN	Interior	618	Randall Carter-Elementary S	Office Custodian	1	2L4' T12 EE/EEMAG	old wrap	1	70	0.1	1L4' T8 28w/ELEE HI/NEW	new wrap	1	33	0.0	0.0	86	2,320
IN	Interior	619	Randall Carter-Elementary S	Classroom Child Study	1	4L4' T12 EE/EEMAG	wrap	4	140	0.6	2L4' T8 28w/ELEE HI/NEW	new wrap wide	4	64	0.3	0.3	766	2,520
IN	Interior	620	Randall Carter-Elementary S	Mechanical Boiler	1	1L4' T8 32w/EL	strip reflector	1	30	0.0	1L4' T8 28w/ELEE LO	rlrb	1	22	0.0	0.0	4	500
IN	Interior	621	Randall Carter-Elementary S	Mechanical Boiler	1	2L8' T12 HO STD/EL	strip reflector	3	195	0.6	4L4' T8 28w/ELEE HI/STRIP RF	rlrb strip rfl kit	3	126	0.4	0.2	104	500
IN	Interior	622	Randall Carter-Elementary S	Mechanical Boiler	1	23W COMPACT HARDWI	dome	1	24	0.0	NO RETRO	no change needed		24	0.0			500
IN	Interior	623	Randall Carter-Elementary S	Hall Boiler To 3	1	3L4' T8 32w/EL	trof acr	11	88	1.0	3L4' T8 28w/ELEE LO	rlrb	11	63	0.7	0.3	996	3,620
IN	Interior	624	Randall Carter-Elementary S	Hall Main Office To Main Exit	1	3L4' T8 32w/EL	trof acr	13	88	1.1	3L4' T8 28w/ELEE LO	rlrb	13	63	0.8	0.3	1,177	3,620

In or Out	ECM	Line	Building Name	Location	Fl	Pre Fixture Description	Pre Fixture Style	Pre Qty	Pre Watts	Pre kW	Post Fixture Description	Post Fixture Style	Post Qty	Post Watts	Post kW	kW Saved	kWH Saved	Annual Hours
IN	Interior	625	Randall Carter-Elementary S	Hall Display Case	1	1L4' T12 EE/EEMAG	strip	1	40	0.0	1L4' T8 28w/ELEE LO/STRIP KI	rlrb strip kit	1	22	0.0	0.0	158	8,760
IN	Interior	626	Randall Carter-Elementary S	Bath Girls	1	2L4' T8 32w/EL	old wrap	1	60	0.1	1L4' T8 28w/ELEE HI/NEW	new wrap	1	33	0.0	0.0	90	3,320
IN	Interior	627	Randall Carter-Elementary S	Bath Girls	1	4L4' T8 32w/EL-8'	old wrap	2	112	0.2	2L4' T8 28w/ELEE HI/NEW-8'	new wrap	2	64	0.1	0.1	319	3,320
IN	Interior	628	Randall Carter-Elementary S	Closet Clean	1	23W COMPACT HARDWI	keyless	1	24	0.0	NO RETRO	no change needed		24	0.0			500
IN	Interior	629	Randall Carter-Elementary S	Bath Boys	1	2L4' T8 32w/EL	old wrap	1	60	0.1	1L4' T8 28w/ELEE HI/NEW	new wrap	1	33	0.0	0.0	90	3,320
IN	Interior	630	Randall Carter-Elementary S	Bath Boys	1	4L4' T8 32w/EL-8'	old wrap	2	112	0.2	2L4' T8 28w/ELEE HI/NEW-8'	new wrap	2	64	0.1	0.1	319	3,320
IN	Interior	631	Randall Carter-Elementary S	Classroom 5	1	3L4' T8 32w/EL	trof acr	9	88	0.8	2L4' T8 28w/ELEE HI/RFL	rlrb RT8 kit	9	64	0.6	0.2	544	2,520
IN	Interior	632	Randall Carter-Elementary S	Classroom 5	1	52W INCANDESCENT	square recessed	1	52	0.1	11W COMPACT SI/29708/CF11	screw in	1	11	0.0	0.0	103	2,520
IN	Interior	633	Randall Carter-Elementary S	Classroom 1	1	4L4' T12 EE/EEMAG	trof acr	29	140	4.1	2L4' T8 28w/ELEE HI/RFL	rlrb RT8 kit	29	64	1.9	2.2	5,554	2,520
IN	Interior	634	Randall Carter-Elementary S	Classroom 1	1	4L4' T8 32w/EL	trof acr	7	112	0.8	2L4' T8 28w/ELEE HI/RFL	rlrb RT8 kit	7	64	0.4	0.3	847	2,520
IN	Interior	635	Randall Carter-Elementary S	Classroom 1	1	2L4' T12 U EE/EEMAG	trof acr	2	70	0.1	2L2' T8 15w/ELEE HI/RFL	rlrb RT8 kit	2	33	0.1	0.1	186	2,520
IN	Interior	636	Randall Carter-Elementary S	Office Librarian	1	2L4' T12 EE/EEMAG	wrap	1	70	0.1	1L4' T8 28w/ELEE HI/NEW	new wrap	1	33	0.0	0.0	86	2,320
IN	Interior	637	Randall Carter-Elementary S	Storage Server	1	4L4' T12 EE/EEMAG-8'	old wrap	1	140	0.1	2L4' T8 28w/ELEE HI/NEW-8'	new wrap	1	64	0.1	0.1	38	500
IN	Interior	638	Randall Carter-Elementary S	Classroom 4	1	3L4' T8 32w/EL	trof acr	9	88	0.8	2L4' T8 28w/ELEE HI/RFL	rlrb RT8 kit	9	64	0.6	0.2	544	2,520
IN	Interior	639	Randall Carter-Elementary S	Classroom 4	1	52W INCANDESCENT	square recessed	1	52	0.1	11W COMPACT SI/29708/CF11	screw in	1	11	0.0	0.0	103	2,520
IN	Interior	640	Randall Carter-Elementary S	Classroom 3	1	3L4' T8 32w/EL	trof acr	9	88	0.8	2L4' T8 28w/ELEE HI/RFL	rlrb RT8 kit	9	64	0.6	0.2	544	2,520
IN	Interior	641	Randall Carter-Elementary S	Classroom 3	1	52W INCANDESCENT	square recessed	1	52	0.1	11W COMPACT SI/29708/CF11	screw in	1	11	0.0	0.0	103	2,520
IN	Interior	642	Randall Carter-Elementary S	Hall 21 To 25	1	3L4' T8 32w/EL	trof acr	11	88	1.0	3L4' T8 28w/ELEE LO	rlrb	11	63	0.7	0.3	996	3,620
IN	Interior	643	Randall Carter-Elementary S	Classroom 30	1	4L4' T8 32w/EL	box acrylic	2	112	0.2	2L4' T8 28w/ELEE HI/RFL	rlrb RT8 kit	2	64	0.1	0.1	242	2,520
IN	Interior	644	Randall Carter-Elementary S	Mechanical Air Handler	1	52W INCANDESCENT	keyless	2	52	0.1	23W COMPACT SI/29712/CF23	screw in	2	23	0.0	0.1	29	500
IN	Interior	645	Randall Carter-Elementary S	Classroom 21	1	2L4' T12 EE/EEMAG	trof opaque 1' wid	2	70	0.1	2L4' T8 28w/ELEE LO	rlrb	2	42	0.1	0.1	141	2,520
IN	Interior	646	Randall Carter-Elementary S	Classroom 21	1	4L4' T12 EE/EEMAG	wrap	13	140	1.8	2L4' T8 28w/ELEE HI/NEW	new wrap wide	13	64	0.8	1.0	2,490	2,520
IN	Interior	647	Randall Carter-Elementary S	Bath 21	1	2x13W COMPACT HARDV	square surface m	1	30	0.0	NO RETRO	no change needed		30	0.0			3,320
IN	Interior	648	Randall Carter-Elementary S	Classroom 22	1	2L4' T12 EE/EEMAG	trof opaque 1' wid	3	70	0.2	2L4' T8 28w/ELEE LO	rlrb	3	42	0.1	0.1	212	2,520
IN	Interior	649	Randall Carter-Elementary S	Classroom 22	1	4L4' T12 EE/EEMAG-8'	wrap	6	140	0.8	2L4' T8 28w/ELEE HI/NEW-8'	new wrap	6	64	0.4	0.5	1,149	2,520
IN	Interior	650	Randall Carter-Elementary S	Classroom 22	1	2L4' T12 EE/EEMAG	wrap	1	70	0.1	1L4' T8 28w/ELEE HI/NEW	new wrap	1	33	0.0	0.0	93	2,520
IN	Interior	651	Randall Carter-Elementary S	Bath 22	1	2x13W COMPACT HARDV	square surface m	1	30	0.0	NO RETRO	no change needed		30	0.0			3,320
IN	Interior	652	Randall Carter-Elementary S	Classroom 29	1	4L4' T12 EE/EEMAG-8'	wrap	2	140	0.3	2L4' T8 28w/ELEE HI/NEW-8'	new wrap	2	64	0.1	0.2	383	2,520
IN	Interior	653	Randall Carter-Elementary S	Classroom 29	1	2L4' T12 EE/EEMAG	wrap	1	70	0.1	1L4' T8 28w/ELEE HI/NEW	new wrap	1	33	0.0	0.0	93	2,520
IN	Interior	654	Randall Carter-Elementary S	Classroom 29	1	4L4' T12 EE/EEMAG-8'	wrap	4	140	0.6	2L4' T8 28w/ELEE HI/NEW-8'	new wrap	4	64	0.3	0.3	766	2,520
IN	Interior	655	Randall Carter-Elementary S	Classroom 29	1	2L4' T12 EE/EEMAG	wrap	2	70	0.1	1L4' T8 28w/ELEE HI/NEW	new wrap	2	33	0.1	0.1	186	2,520
IN	Interior	656	Randall Carter-Elementary S	Bath 29	1	2x13W COMPACT HARDV	square surface m	1	30	0.0	NO RETRO	no change needed		30	0.0			3,320
IN	Interior	657	Randall Carter-Elementary S	Classroom 23	1	4L4' T12 EE/EEMAG-8'	wrap	2	140	0.3	2L4' T8 28w/ELEE HI/NEW-8'	new wrap	2	64	0.1	0.2	383	2,520
IN	Interior	658	Randall Carter-Elementary S	Classroom 23	1	2L4' T12 EE/EEMAG	wrap	1	70	0.1	1L4' T8 28w/ELEE HI/NEW	new wrap	1	33	0.0	0.0	93	2,520
IN	Interior	659	Randall Carter-Elementary S	Classroom 23	1	4L4' T12 EE/EEMAG-8'	wrap	4	140	0.6	2L4' T8 28w/ELEE HI/NEW-8'	new wrap	4	64	0.3	0.3	766	2,520
IN	Interior	660	Randall Carter-Elementary S	Classroom 23	1	2L4' T12 EE/EEMAG	wrap	2	70	0.1	1L4' T8 28w/ELEE HI/NEW	new wrap	2	33	0.1	0.1	186	2,520
IN	Interior	661	Randall Carter-Elementary S	Classroom 23	1	2L4' T12 EE/EEMAG	trof opaque 1' wid	4	70	0.3	2L4' T8 28w/ELEE LO	rlrb	4	42	0.2	0.1	282	2,520
IN	Interior	662	Randall Carter-Elementary S	Bath 23	1	2x13W COMPACT HARDV	square surface m	1	30	0.0	NO RETRO	no change needed		30	0.0			3,320
IN	Interior	663	Randall Carter-Elementary S	Storage 23	1	2x60W INCANDESCENTS	old drum	2	120	0.2	2L2' T8 15w/ELEE LO/NEW	new wrap	2	24	0.0	0.2	96	500
IN	Interior	664	Randall Carter-Elementary S	Classroom 28	1	4L4' T12 EE/EEMAG-8'	wrap	2	140	0.3	2L4' T8 28w/ELEE HI/NEW-8'	new wrap	2	64	0.1	0.2	383	2,520
IN	Interior	665	Randall Carter-Elementary S	Classroom 28	1	2L4' T12 EE/EEMAG	wrap	1	70	0.1	1L4' T8 28w/ELEE HI/NEW	new wrap	1	33	0.0	0.0	93	2,520
IN	Interior	666	Randall Carter-Elementary S	Classroom 28	1	4L4' T12 EE/EEMAG-8'	wrap	4	140	0.6	2L4' T8 28w/ELEE HI/NEW-8'	new wrap	4	64	0.3	0.3	766	2,520
IN	Interior	667	Randall Carter-Elementary S	Classroom 28	1	2L4' T12 EE/EEMAG	wrap	2	70	0.1	1L4' T8 28w/ELEE HI/NEW	new wrap	2	33	0.1	0.1	186	2,520
IN	Interior	668	Randall Carter-Elementary S	Bath 28	1	2x13W COMPACT HARDV	square surface m	1	30	0.0	NO RETRO	no change needed		30	0.0			3,320
IN	Interior	669	Randall Carter-Elementary S	Closet Clean	1	60W INCANDESCENT	old jar	1	60	0.1	13 WATT LED/NEW	new LED jar exterior	1	13	0.0	0.0	24	500
IN	Interior	670	Randall Carter-Elementary S	Classroom 27	1	4L4' T12 EE/EEMAG-8'	wrap	2	140	0.3	2L4' T8 28w/ELEE HI/NEW-8'	new wrap	2	64	0.1	0.2	383	2,520
IN	Interior	671	Randall Carter-Elementary S	Classroom 27	1	2L4' T12 EE/EEMAG	wrap	1	70	0.1	1L4' T8 28w/ELEE HI/NEW	new wrap	1	33	0.0	0.0	93	2,520
IN	Interior	672	Randall Carter-Elementary S	Classroom 27	1	4L4' T12 EE/EEMAG-8'	wrap	4	140	0.6	2L4' T8 28w/ELEE HI/NEW-8'	new wrap	4	64	0.3	0.3	766	2,520

In or Out	ECM	Line	Building Name	Location	Fl	Pre Fixture Description	Pre Fixture Style	Pre Qty	Pre Watts	Pre kW	Post Fixture Description	Post Fixture Style	Post Qty	Post Watts	Post kW	kW Saved	kWH Saved	Annual Hours
IN	Interior	673	Randall Carter-Elementary S	Classroom 27	1	2L4' T12 EE/EEMAG	wrap	2	70	0.1	1L4' T8 28w/ELEE HI/NEW	new wrap	2	33	0.1	0.1	186	2,520
IN	Interior	674	Randall Carter-Elementary S	Bath 27	1	2x13W COMPACT HARDV	square surface mt	1	30	0.0	NO RETRO	no change needed		30	0.0			3,320
IN	Interior	675	Randall Carter-Elementary S	Classroom 24	1	4L4' T12 EE/EEMAG-8'	wrap	2	140	0.3	2L4' T8 28w/ELEE HI/NEW-8'	new wrap	2	64	0.1	0.2	383	2,520
IN	Interior	676	Randall Carter-Elementary S	Classroom 24	1	2L4' T12 EE/EEMAG	wrap	1	70	0.1	1L4' T8 28w/ELEE HI/NEW	new wrap	1	33	0.0	0.0	93	2,520
IN	Interior	677	Randall Carter-Elementary S	Classroom 24	1	4L4' T12 EE/EEMAG-8'	wrap	4	140	0.6	2L4' T8 28w/ELEE HI/NEW-8'	new wrap	4	64	0.3	0.3	766	2,520
IN	Interior	678	Randall Carter-Elementary S	Classroom 24	1	2L4' T12 EE/EEMAG	wrap	2	70	0.1	1L4' T8 28w/ELEE HI/NEW	new wrap	2	33	0.1	0.1	186	2,520
IN	Interior	679	Randall Carter-Elementary S	Classroom 24	1	2L4' T12 EE/EEMAG	trof opaque 1' wid	4	70	0.3	2L4' T8 28w/ELEE LO	rlrb	4	42	0.2	0.1	282	2,520
IN	Interior	680	Randall Carter-Elementary S	Bath 24	1	2x13W COMPACT HARDV	square surface mt	1	30	0.0	NO RETRO	no change needed		30	0.0			3,320
IN	Interior	681	Randall Carter-Elementary S	Classroom 26	1	4L4' T12 EE/EEMAG-8'	wrap	2	140	0.3	2L4' T8 28w/ELEE HI/NEW-8'	new wrap	2	64	0.1	0.2	383	2,520
IN	Interior	682	Randall Carter-Elementary S	Classroom 26	1	2L4' T12 EE/EEMAG	wrap	1	70	0.1	1L4' T8 28w/ELEE HI/NEW	new wrap	1	33	0.0	0.0	93	2,520
IN	Interior	683	Randall Carter-Elementary S	Classroom 26	1	4L4' T12 EE/EEMAG-8'	wrap	4	140	0.6	2L4' T8 28w/ELEE HI/NEW-8'	new wrap	4	64	0.3	0.3	766	2,520
IN	Interior	684	Randall Carter-Elementary S	Classroom 26	1	2L4' T12 EE/EEMAG	wrap	2	70	0.1	1L4' T8 28w/ELEE HI/NEW	new wrap	2	33	0.1	0.1	186	2,520
IN	Interior	685	Randall Carter-Elementary S	Bath 26	1	2x13W COMPACT HARDV	square surface mt	1	30	0.0	NO RETRO	no change needed		30	0.0			3,320
IN	Interior	686	Randall Carter-Elementary S	Classroom 25	1	4L4' T12 EE/EEMAG-8'	wrap	3	140	0.4	2L4' T8 28w/ELEE HI/NEW-8'	new wrap	3	64	0.2	0.2	575	2,520
IN	Interior	687	Randall Carter-Elementary S	Classroom 25	1	4L4' T12 EE/EEMAG-8'	wrap	6	140	0.8	2L4' T8 28w/ELEE HI/NEW-8'	new wrap	6	64	0.4	0.5	1,149	2,520
IN	Interior	688	Randall Carter-Elementary S	Bath 25	1	2x13W COMPACT HARDV	square surface mt	1	30	0.0	NO RETRO	no change needed		30	0.0			3,320
IN	Exterior	689	Randall Carter-Elementary S	Bldg Mt Fixture 1	ext	250W HI PRESSURE SOD	wallpack	11	295	3.2	133 WATT LED/NEW	new LED wallpack	11	133	1.5	1.8	7,805	4,380
IN	Exterior	690	Randall Carter-Elementary S	Bldg Mt Fixture 1	ext	250W HI PRESSURE SOD	wallpack	2	295	0.6	133 WATT LED/NEW	new LED wallpack	2	133	0.3	0.3	1,419	4,380
IN	Exterior	691	Randall Carter-Elementary S	Bldg Mt Fixture 2	ext	50W HI PRESSURE SODI	canopy	2	65	0.1	26 WATT LED/NEW	new LED exterior area li	2	26	0.1	0.1	342	4,380
IN	Interior	692	Board of Ed Administration	Office Asst. Business Admin.	2	2L4' T8 U/EL	trof minicube	1	60	0.1	2L2' T8 15w/ELEE HI/RFL	rlrb RT8 kit	1	33	0.0	0.0	70	2,600
IN	Interior	693	Board of Ed Administration	Office Asst. Business Admin.	2	2L4' T8 32w/EL	trof minicube	2	60	0.1	2L4' T8 28w/ELEE HI/RFL	rlrb RT8 kit	2	64	0.1	0.0	-21	2,600
IN	Interior	694	Board of Ed Administration	Office Staff Accountant	2	4L4' T8 32w/EL	trof acr	2	112	0.2	2L4' T8 28w/ELEE HI/RFL	rlrb rfl	2	64	0.1	0.1	250	2,600
IN	Interior	695	Board of Ed Administration	Office Open General Office Spac	2	4L4' T8 32w/EL	trof acr	9	112	1.0	2L4' T8 28w/ELEE HI/RFL	rlrb rfl	9	64	0.6	0.4	1,123	2,600
IN	Interior	696	Board of Ed Administration	Office Open General Office Spac	2	2L4' T8 U/EL	trof acr	3	60	0.2	2L2' T8 15w/ELEE HI/RFL	rlrb rfl	3	33	0.1	0.1	211	2,600
IN	Interior	697	Board of Ed Administration	Office Business Administrator	2	4L4' T8 32w/EL	trof minicube	4	112	0.4	2L4' T8 28w/ELEE HI/RFL	rlrb RT8 kit	4	64	0.3	0.2	499	2,600
IN	Interior	698	Board of Ed Administration	Office Admin. Asst.	2	4L4' T8 32w/EL	trof acr	2	112	0.2	2L4' T8 28w/ELEE HI/RFL	rlrb rfl	2	64	0.1	0.1	250	2,600
IN	Interior	699	Board of Ed Administration	Office Copy	2	4L4' T8 32w/EL	trof acr	2	112	0.2	2L4' T8 28w/ELEE HI/RFL	rlrb rfl	2	64	0.1	0.1	250	2,600
IN	Interior	700	Board of Ed Administration	Bath Men	2	90W INCANDESCENT	can rec 9"	1	90	0.1	21 WATT LED SI/LED21Par38/D	screw in led	1	21	0.0	0.1	179	2,600
IN	Interior	701	Board of Ed Administration	Bath Men	2	4L4' T8 32w/EL	trof acr	1	112	0.1	2L4' T8 28w/ELEE HI/RFL	rlrb rfl	1	64	0.1	0.0	125	2,600
IN	Interior	702	Board of Ed Administration	Bath Men	2	2L4' T8 32w/EL	trof opaque 1' wid	2	60	0.1	2L4' T8 28w/ELEE LO	rlrb	2	42	0.1	0.0	94	2,600
IN	Interior	703	Board of Ed Administration	Bath Women	2	90W INCANDESCENT	can rec 9"	1	90	0.1	21 WATT LED SI/LED21Par38/D	screw in led	1	21	0.0	0.1	179	2,600
IN	Interior	704	Board of Ed Administration	Bath Women	2	4L4' T8 32w/EL	trof acr	1	112	0.1	2L4' T8 28w/ELEE HI/RFL	rlrb rfl	1	64	0.1	0.0	125	2,600
IN	Interior	705	Board of Ed Administration	Bath Women	2	2L4' T8 32w/EL	trof opaque 1' wid	2	60	0.1	2L4' T8 28w/ELEE LO	rlrb	2	42	0.1	0.0	94	2,600
IN	Interior	706	Board of Ed Administration	Bath Handicap	2	4L4' T8 32w/EL	trof acr	1	112	0.1	2L4' T8 28w/ELEE HI/RFL	rlrb rfl	1	64	0.1	0.0	125	2,600
IN	Interior	707	Board of Ed Administration	Office Open Student Support	2	4L4' T8 32w/EL	trof minicube	4	112	0.4	2L4' T8 28w/ELEE HI/RFL	rlrb RT8 kit	4	64	0.3	0.2	499	2,600
IN	Interior	708	Board of Ed Administration	Office Student Support 1	2	4L4' T8 32w/EL	trof minicube	4	112	0.4	2L4' T8 28w/ELEE HI/RFL	rlrb RT8 kit	4	64	0.3	0.2	499	2,600
IN	Interior	709	Board of Ed Administration	Office Student Support 2	2	4L4' T8 32w/EL	trof minicube	4	112	0.4	2L4' T8 28w/ELEE HI/RFL	rlrb RT8 kit	4	64	0.3	0.2	499	2,600
IN	Interior	710	Board of Ed Administration	Closet Clean	2	32W COMPACT SCREWIN	keyless	1	32	0.0	NO RETRO	no change needed		32	0.0			2,600
IN	Interior	711	Board of Ed Administration	Office 3	2	2L4' T8 U/EL	trof minicube	4	60	0.2	2L2' T8 15w/ELEE HI/RFL	rlrb RT8 kit	4	33	0.1	0.1	281	2,600
IN	Interior	712	Board of Ed Administration	Office Human Resources 1	2	3L4' T8 32w/EL	trof minicube	2	88	0.2	2L4' T8 28w/ELEE HI/RFL	rlrb RT8 kit	2	64	0.1	0.0	125	2,600
IN	Interior	713	Board of Ed Administration	Office Athletic Director	2	4L4' T8 32w/EL	trof minicube	4	112	0.4	2L4' T8 28w/ELEE HI/RFL	rlrb RT8 kit	4	64	0.3	0.2	499	2,600
IN	Interior	714	Board of Ed Administration	Office Elementary Director	2	4L4' T8 32w/EL	trof minicube	4	112	0.4	2L4' T8 28w/ELEE HI/RFL	rlrb RT8 kit	4	64	0.3	0.2	499	2,600
IN	Interior	715	Board of Ed Administration	Office Secondary Education	2	4L4' T8 32w/EL	trof minicube	4	112	0.4	2L4' T8 28w/ELEE HI/RFL	rlrb RT8 kit	4	64	0.3	0.2	499	2,600
IN	Interior	716	Board of Ed Administration	Office Asst Super Intendant	2	2L4' T8 U/EL	trof minicube	6	60	0.4	2L2' T8 15w/ELEE HI/RFL	rlrb RT8 kit	6	33	0.2	0.2	421	2,600
IN	Interior	717	Board of Ed Administration	Office Open General Office Spac	2	4L4' T8 32w/EL	trof acr	8	112	0.9	2L4' T8 28w/ELEE HI/RFL	rlrb rfl	8	64	0.5	0.4	998	2,600
IN	Interior	718	Board of Ed Administration	Office Open General Office Spac	2	2L4' T8 U/EL	trof acr	8	60	0.5	2L2' T8 15w/ELEE HI/RFL	rlrb rfl	8	33	0.3	0.2	562	2,600
IN	Interior	719	Board of Ed Administration	Office Super Intendant	2	4L4' T8 32w/EL	trof minicube	6	112	0.7	2L4' T8 28w/ELEE HI/RFL	rlrb RT8 kit	6	64	0.4	0.3	749	2,600
IN	Interior	720	Board of Ed Administration	Conference Super Intendant	2	4L4' T12 EE/EEMAG	trof acrylic dbl swi	8	140	1.1	4L4' T8 28w/ELEE LO (2Lx2 BAL	rlrb dbl switched	8	84	0.7	0.4	1,165	2,600

In or Out	ECM	Line	Building Name	Location	Fl	Pre Fixture Description	Pre Fixture Style	Pre Qty	Pre Watts	Pre kW	Post Fixture Description	Post Fixture Style	Post Qty	Post Watts	Post kW	kW Saved	kWH Saved	Annual Hours
IN	Interior	721	Board of Ed Administration	Conference 2	2	4L4' T12 EE/EEMAG	trof acr	6	140	0.8	2L4' T8 28w/ELEE HI/RFL	rlrb rfl	6	64	0.4	0.5	1,186	2,600
IN	Interior	722	Board of Ed Administration	Lounge Lunch Room	2	3L4' T8 32w/EL	trof acr	2	88	0.2	3L4' T8 28w/ELEE LO	rlrb	2	63	0.1	0.1	91	1,820
IN	Interior	723	Board of Ed Administration	Office 4	2	2L4' T8 32w/EL	wrap	2	60	0.1	1L4' T8 28w/ELEE HI/NEW	new wrap	2	33	0.1	0.1	140	2,600
IN	Interior	724	Board of Ed Administration	Office Human Resources 2	2	4L4' T8 32w/EL-8'	wrap	2	112	0.2	2L4' T8 28w/ELEE HI/NEW-8'	new wrap	2	64	0.1	0.1	250	2,600
IN	Interior	725	Board of Ed Administration	Office Human Resources 3	2	4L4' T8 32w/EL	trof acr	4	112	0.4	2L4' T8 28w/ELEE HI/RFL	rlrb rfl	4	64	0.3	0.2	499	2,600
IN	Interior	726	Board of Ed Administration	Hall Human Resources 3 To Cor	2	2L4' T8 U/EL	trof acr	4	60	0.2	2L2' T8 15w/ELEE HI/RFL	rlrb rfl	4	33	0.1	0.1	281	2,600
IN	Interior	727	Board of Ed Administration	Lobby Main	2	2L4' T8 32w/EL	trof acr	8	60	0.5	2L4' T8 28w/ELEE LO	rlrb	8	42	0.3	0.1	374	2,600
IN	Interior	728	Board of Ed Administration	Hall Vestibule Main	2	2L4' T8 32w/EL	trof acr	1	60	0.1	2L4' T8 28w/ELEE LO	rlrb	1	42	0.0	0.0	47	2,600
IN	Interior	729	Board of Ed Administration	Office Payroll	2	3L2' T8 17w/EL	trof minicube	4	47	0.2	2L2' T8 15w/ELEE HI/RFL	rlrb RT8 kit	4	33	0.1	0.1	146	2,600
IN	Interior	730	Board of Ed Administration	Office Payroll	2	2L4' T8 U/EL	trof minicube	1	60	0.1	2L2' T8 15w/ELEE HI/RFL	rlrb RT8 kit	1	33	0.0	0.0	70	2,600
IN	Interior	731	Board of Ed Administration	Office Health Benefits	2	4L4' T8 32w/EL	trof acr	2	112	0.2	2L4' T8 28w/ELEE HI/RFL	rlrb rfl	2	64	0.1	0.1	250	2,600
IN	Interior	732	Board of Ed Administration	Office 5	2	4L4' T12 EE/EEMAG-8'	old wrap	2	140	0.3	2L4' T8 28w/ELEE HI/NEW-8'	new wrap	2	64	0.1	0.2	395	2,600
IN	Interior	733	Board of Ed Administration	Hall Business Admin. To Athletic	2	2L4' T8 U/EL	trof acr	9	60	0.5	2L2' T8 15w/ELEE HI/RFL	rlrb rfl	9	33	0.3	0.2	632	2,600
IN	Interior	734	Board of Ed Administration	Stair	s	2L4' T8 32w/EL	old wrap	3	60	0.2	1L4' T8 28w/ELEE HI/NEW	new wrap	3	33	0.1	0.1	211	2,600
IN	Interior	735	Board of Ed Administration	Hall By Womens Bath	1	2L4' T8 32w/EL	wrap	1	60	0.1	1L4' T8 28w/ELEE HI/NEW	new wrap	1	33	0.0	0.0	70	2,600
IN	Interior	736	Board of Ed Administration	Hall By Womens Bath	1	2L4' T8 U/EL	trof acr	1	60	0.1	2L2' T8 15w/ELEE HI/RFL	rlrb rfl	1	33	0.0	0.0	70	2,600
IN	Interior	737	Board of Ed Administration	Storage 2	1	2L4' T8 32w/EL	wrap	2	60	0.1	1L4' T8 28w/ELEE HI/NEW	new wrap	2	33	0.1	0.1	140	2,600
IN	Interior	738	Board of Ed Administration	Storage 3	1	2L4' T8 32w/EL	wrap	4	60	0.2	1L4' T8 28w/ELEE HI/NEW	new wrap	4	33	0.1	0.1	281	2,600
IN	Interior	739	Board of Ed Administration	Bath Women	1	2L4' T8 32w/EL	trof acr	1	60	0.1	2L4' T8 28w/ELEE LO	rlrb	1	42	0.0	0.0	47	2,600
IN	Interior	740	Board of Ed Administration	Closet Telephone	1	2L4' T12 EE/EEMAG	old box acrylic	6	70	0.4	1L4' T8 28w/ELEE HI/NEW	new wrap	6	33	0.2	0.2	577	2,600
IN	Interior	741	Board of Ed Administration	Hall By Stairs	1	2L4' T8 32w/EL	old wrap	4	60	0.2	1L4' T8 28w/ELEE HI/NEW	new wrap	4	33	0.1	0.1	281	2,600
IN	Interior	742	Board of Ed Administration	Bath Men	1	2L4' T8 32w/EL	trof opaque 1' wid	4	60	0.2	2L4' T8 28w/ELEE LO	rlrb	4	42	0.2	0.1	187	2,600
IN	Interior	743	Board of Ed Administration	Hall Technology Department	1	2L4' T8 32w/EL	old wrap	4	60	0.2	1L4' T8 28w/ELEE HI/NEW	new wrap	4	33	0.1	0.1	281	2,600
IN	Interior	744	Board of Ed Administration	Office Open Computer Center	1	4L4' T8 32w/EL	trof minicube	2	112	0.2	2L4' T8 28w/ELEE HI/RFL	rlrb RT8 kit	2	64	0.1	0.1	250	2,600
IN	Interior	745	Board of Ed Administration	Office Computer Center	1	2L4' T8 U/EL	trof minicube	4	60	0.2	2L2' T8 15w/ELEE HI/RFL	rlrb RT8 kit	4	33	0.1	0.1	281	2,600
IN	Interior	746	Board of Ed Administration	Office Open Computer Center 2	1	4L4' T8 32w/EL	trof minicube	4	112	0.4	2L4' T8 28w/ELEE HI/RFL	rlrb RT8 kit	4	64	0.3	0.2	499	2,600
IN	Interior	747	Board of Ed Administration	Office Open Computer Center 2	1	2L4' T8 U/EL	trof minicube	4	60	0.2	2L2' T8 15w/ELEE HI/RFL	rlrb RT8 kit	4	33	0.1	0.1	281	2,600
IN	Interior	748	Board of Ed Administration	Office Open Server Room	1	4L4' T12 EE/EEMAG	old wrap	3	140	0.4	2L4' T8 28w/ELEE HI/NEW	new wrap wide	3	64	0.2	0.2	593	2,600
IN	Interior	749	Board of Ed Administration	Office Open Server Room	1	2L4' T12 EE/EEMAG	old wrap	2	70	0.1	1L4' T8 28w/ELEE HI/NEW	new wrap	2	33	0.1	0.1	192	2,600
IN	Interior	750	Board of Ed Administration	Office Open Server Room	1	2L2' T12 STD/STD	old wrap	1	56	0.1	2L2' T8 15w/ELEE LO/NEW	new wrap	1	24	0.0	0.0	83	2,600
IN	Interior	751	Board of Ed Administration	Office Lead Tech	1	4L4' T8 32w/EL	trof minicube	3	112	0.3	2L4' T8 28w/ELEE HI/RFL	rlrb RT8 kit	3	64	0.2	0.1	374	2,600
IN	Interior	752	Board of Ed Administration	Office Custodian	1	2L4' T12 EE/EEMAG	box acr 1' wide	1	70	0.1	2L4' T8 28w/ELEE LO	rlrb	1	42	0.0	0.0	73	2,600
IN	Interior	753	Board of Ed Administration	Office 3	1	4L4' T8 32w/EL	trof minicube	2	112	0.2	2L4' T8 28w/ELEE HI/RFL	rlrb RT8 kit	2	64	0.1	0.1	250	2,600
IN	Interior	754	Board of Ed Administration	Office 4	1	4L4' T8 32w/EL	trof minicube	2	112	0.2	2L4' T8 28w/ELEE HI/RFL	rlrb RT8 kit	2	64	0.1	0.1	250	2,600
IN	Interior	755	Board of Ed Administration	Mechanical Boiler	1	2L4' T8 32w/EL	strip reflector	4	60	0.2	2L4' T8 28w/ELEE LO	rlrb	4	42	0.2	0.1	187	2,600
IN	Interior	756	Board of Ed Administration	Lobby Building Services	1	2L4' T8 U/EL	trof acr	4	60	0.2	2L2' T8 15w/ELEE HI/RFL	rlrb rfl	4	33	0.1	0.1	281	2,600
IN	Interior	757	Board of Ed Administration	Lobby Building Services	1	2x13W COMPACT HARDV	old drum	1	30	0.0	NO RETRO	no change needed		30	0.0			2,600
IN	Interior	758	Board of Ed Administration	Office 5	1	2L4' T8 32w/EL	trof acr	3	60	0.2	2L4' T8 28w/ELEE LO	rlrb	3	42	0.1	0.1	140	2,600
IN	Interior	759	Board of Ed Administration	Office 5	1	2L4' T8 U/EL	trof acr	3	60	0.2	2L2' T8 15w/ELEE HI/RFL	rlrb rfl	3	33	0.1	0.1	211	2,600
IN	Interior	760	Board of Ed Administration	Storage 1	1	2L4' T8 32w/EL	wrap	1	60	0.1	1L4' T8 28w/ELEE HI/NEW	new wrap	1	33	0.0	0.0	70	2,600
IN	Interior	761	Board of Ed Administration	Hall Print Shop	1	2L4' T8 U/EL	trof acr	1	60	0.1	2L2' T8 15w/ELEE HI/RFL	rlrb rfl	1	33	0.0	0.0	70	2,600
IN	Interior	762	Board of Ed Administration	Office Open Print Shop	1	4L4' T8 32w/EL	trof acr	5	112	0.6	2L4' T8 28w/ELEE HI/RFL	rlrb rfl	5	64	0.3	0.2	624	2,600
IN	Interior	763	Board of Ed Administration	Office Open Print Shop	1	2L4' T8 U/EL	trof acr	5	60	0.3	2L2' T8 15w/ELEE HI/RFL	rlrb rfl	5	33	0.2	0.1	351	2,600
IN	Interior	764	Board of Ed Administration	Shop Wood	1	3L4' T8 32w/EL	vapor tight	12	88	1.1	3L4' T8 28w/ELEE LO	rlrb	12	63	0.8	0.3	780	2,600
IN	Interior	765	Board of Ed Administration	Warehouse Wood	1	2L4' T8 32w/EL	industrial	15	60	0.9	2L4' T8 28w/ELEE LO	rlrb	15	42	0.6	0.3	702	2,600
IN	Interior	766	Board of Ed Administration	Office Warehouse	1	3L2' T8 17w/EL	trof minicube	1	47	0.0	2L2' T8 15w/ELEE HI/RFL	rlrb RT8 kit	1	33	0.0	0.0	36	2,600
IN	Interior	767	Board of Ed Administration	Hall By Break Room	1	2L4' T8 U/EL	trof acr	2	60	0.1	2L2' T8 15w/ELEE HI/RFL	rlrb rfl	2	33	0.1	0.1	140	2,600
IN	Interior	768	Board of Ed Administration	Lounge Break Room	1	2L4' T8 U/EL	trof acr	4	60	0.2	2L2' T8 15w/ELEE HI/RFL	rlrb rfl	4	33	0.1	0.1	197	1,820

In or Out	ECM	Line	Building Name	Location	Fl	Pre Fixture Description	Pre Fixture Style	Pre Qty	Pre Watts	Pre kW	Post Fixture Description	Post Fixture Style	Post Qty	Post Watts	Post kW	kW Saved	kWH Saved	Annual Hours
IN	Interior	769	Board of Ed Administration	Office Open Stock Room	1	2L4' T8 32w/EL	old wrap	6	60	0.4	1L4' T8 28w/ELEE HI/NEW	new wrap	6	33	0.2	0.2	421	2,600
IN	Interior	770	Board of Ed Administration	Office Open Stock Room	1	2L4' T8 32w/EL	old box acrylic	1	60	0.1	1L4' T8 28w/ELEE HI/NEW	new wrap	1	33	0.0	0.0	70	2,600
IN	Interior	771	Board of Ed Administration	Office Open Stock Room	1	32W COMPACT SCREWI	keyless	5	32	0.2	NO RETRO	no change needed		32	0.2			2,600
IN	Interior	772	Board of Ed Administration	Office Stock Room	1	2L4' T8 32w/EL	old wrap	4	60	0.2	1L4' T8 28w/ELEE HI/NEW	new wrap	4	33	0.1	0.1	281	2,600
IN	Interior	773	Board of Ed Administration	Office 6	1	2L4' T8 32w/EL	trof acr	2	60	0.1	2L4' T8 28w/ELEE LO	rlrb	2	42	0.1	0.0	94	2,600
IN	Interior	774	Board of Ed Administration	Office 6	1	2L4' T8 U/EL	trof acr	2	60	0.1	2L2' T8 15w/ELEE HI/RFL	rlrb rfl	2	33	0.1	0.1	140	2,600
IN	Interior	775	Board of Ed Administration	Conference 6	1	2L4' T8 32w/EL	trof acr	6	60	0.4	2L4' T8 28w/ELEE LO	rlrb	6	42	0.3	0.1	281	2,600
IN	Interior	776	Board of Ed Administration	Office 7	1	4L4' T8 32w/EL	trof minicube	4	112	0.4	2L4' T8 28w/ELEE HI/RFL	rlrb RT8 kit	4	64	0.3	0.2	499	2,600
IN	Interior	777	Board of Ed Administration	Office 8	1	2L4' T8 32w/EL	trof acr rfl	4	60	0.2	2L4' T8 28w/ELEE LO	rlrb	4	42	0.2	0.1	187	2,600
IN	Interior	778	Board of Ed Administration	Office Reception	1	2L2' T8 17w/EL	trof acr	4	33	0.1	2L2' T8 15w/ELEE LO	rlrb	4	27	0.1	0.0	62	2,600
IN	Exterior	779	Board of Ed Administration	Bldg Mt Fixture 1	ext	50W HI PRESSURE SODI	wallpack	2	65	0.1	26 WATT LED/NEW	new LED wallpack	2	26	0.1	0.1	203	2,600
IN	Exterior	780	Board of Ed Administration	Bldg Mt Fixture 2	ext	100W INCANDESCENT	can rec	18	100	1.8	21 WATT LED SI/LED21Par38/D	screw in led	18	21	0.4	1.4	3,697	2,600
IN	Exterior	781	Board of Ed Administration	Bldg Mt Fixture 2	ext	100W INCANDESCENT	can rec	4	100	0.4	21 WATT LED SI/LED21Par38/D	screw in led	4	21	0.1	0.3	822	2,600
IN	Exterior	782	Board of Ed Administration	Bldg Mt Fixture 3	ext	250W HI PRESSURE SOD	wallpack	4	295	1.2	133 WATT LED/NEW	new LED wallpack	4	133	0.5	0.6	1,685	2,600
IN	Interior	783	Ryerson-Elementary School	Classroom 11	1	4L4' T12 EE/EEMAG-8'	old wrap	3	140	0.4	2L4' T8 28w/ELEE HI/NEW-8'	new wrap	3	64	0.2	0.2	575	2,520
IN	Interior	784	Ryerson-Elementary School	Classroom 11	1	4L4' T12 EE/EEMAG-8'	old wrap	6	140	0.8	2L4' T8 28w/ELEE HI/NEW-8'	new wrap	6	64	0.4	0.5	1,149	2,520
IN	Interior	785	Ryerson-Elementary School	Bath 11	1	13W COMPACT HARDWI	square surface mt	1	15	0.0	NO RETRO	no change needed		15	0.0			3,320
IN	Interior	786	Ryerson-Elementary School	Classroom 10	1	4L4' T12 EE/EEMAG-8'	old wrap	3	140	0.4	2L4' T8 28w/ELEE HI/NEW-8'	new wrap	3	64	0.2	0.2	575	2,520
IN	Interior	787	Ryerson-Elementary School	Classroom 10	1	4L4' T12 EE/EEMAG-8'	old wrap	6	140	0.8	2L4' T8 28w/ELEE HI/NEW-8'	new wrap	6	64	0.4	0.5	1,149	2,520
IN	Interior	788	Ryerson-Elementary School	Bath 10	1	13W COMPACT HARDWI	square surface mt	1	15	0.0	NO RETRO	no change needed		15	0.0			3,320
IN	Interior	789	Ryerson-Elementary School	Classroom 12	1	4L4' T12 EE/EEMAG-8'	old wrap	3	140	0.4	2L4' T8 28w/ELEE HI/NEW-8'	new wrap	3	64	0.2	0.2	575	2,520
IN	Interior	790	Ryerson-Elementary School	Classroom 12	1	4L4' T12 EE/EEMAG-8'	old wrap	6	140	0.8	2L4' T8 28w/ELEE HI/NEW-8'	new wrap	6	64	0.4	0.5	1,149	2,520
IN	Interior	791	Ryerson-Elementary School	Bath 12	1	13W COMPACT HARDWI	square surface mt	1	15	0.0	NO RETRO	no change needed		15	0.0			3,320
IN	Interior	792	Ryerson-Elementary School	Classroom 9	1	4L4' T12 EE/EEMAG-8'	old wrap	3	140	0.4	2L4' T8 28w/ELEE HI/NEW-8'	new wrap	3	64	0.2	0.2	575	2,520
IN	Interior	793	Ryerson-Elementary School	Classroom 9	1	4L4' T12 EE/EEMAG-8'	old wrap	6	140	0.8	2L4' T8 28w/ELEE HI/NEW-8'	new wrap	6	64	0.4	0.5	1,149	2,520
IN	Interior	794	Ryerson-Elementary School	Bath 9	1	13W COMPACT HARDWI	square surface mt	1	15	0.0	NO RETRO	no change needed		15	0.0			3,320
IN	Interior	795	Ryerson-Elementary School	Classroom 13	1	4L4' T12 EE/EEMAG-8'	old wrap	3	140	0.4	2L4' T8 28w/ELEE HI/NEW-8'	new wrap	3	64	0.2	0.2	575	2,520
IN	Interior	796	Ryerson-Elementary School	Classroom 13	1	4L4' T12 EE/EEMAG-8'	old wrap	6	140	0.8	2L4' T8 28w/ELEE HI/NEW-8'	new wrap	6	64	0.4	0.5	1,149	2,520
IN	Interior	797	Ryerson-Elementary School	Bath 13	1	13W COMPACT HARDWI	square surface mt	1	15	0.0	NO RETRO	no change needed		15	0.0			3,320
IN	Interior	798	Ryerson-Elementary School	Classroom 8	1	4L4' T12 EE/EEMAG-8'	old wrap	3	140	0.4	2L4' T8 28w/ELEE HI/NEW-8'	new wrap	3	64	0.2	0.2	575	2,520
IN	Interior	799	Ryerson-Elementary School	Classroom 8	1	4L4' T12 EE/EEMAG-8'	old wrap	6	140	0.8	2L4' T8 28w/ELEE HI/NEW-8'	new wrap	6	64	0.4	0.5	1,149	2,520
IN	Interior	800	Ryerson-Elementary School	Bath 8	1	13W COMPACT HARDWI	square surface mt	1	15	0.0	NO RETRO	no change needed		15	0.0			3,320
IN	Interior	801	Ryerson-Elementary School	Office Open 14	1	4L4' T12 EE/EEMAG-8'	old wrap	3	140	0.4	2L4' T8 28w/ELEE HI/NEW-8'	new wrap	3	64	0.2	0.2	620	2,720
IN	Interior	802	Ryerson-Elementary School	Office Open 14	1	4L4' T12 EE/EEMAG-8'	old wrap	6	140	0.8	2L4' T8 28w/ELEE HI/NEW-8'	new wrap	6	64	0.4	0.5	1,240	2,720
IN	Interior	803	Ryerson-Elementary School	Bath 14	1	13W COMPACT HARDWI	square surface mt	1	15	0.0	NO RETRO	no change needed		15	0.0			3,320
IN	Interior	804	Ryerson-Elementary School	Classroom 7	1	4L4' T12 EE/EEMAG-8'	old wrap	3	140	0.4	2L4' T8 28w/ELEE HI/NEW-8'	new wrap	3	64	0.2	0.2	575	2,520
IN	Interior	805	Ryerson-Elementary School	Classroom 7	1	4L4' T12 EE/EEMAG-8'	old wrap	6	140	0.8	2L4' T8 28w/ELEE HI/NEW-8'	new wrap	6	64	0.4	0.5	1,149	2,520
IN	Interior	806	Ryerson-Elementary School	Bath 7	1	13W COMPACT HARDWI	square surface mt	1	15	0.0	NO RETRO	no change needed		15	0.0			3,320
IN	Interior	807	Ryerson-Elementary School	Classroom 15	1	4L4' T12 EE/EEMAG-8'	old wrap	3	140	0.4	2L4' T8 28w/ELEE HI/NEW-8'	new wrap	3	64	0.2	0.2	575	2,520
IN	Interior	808	Ryerson-Elementary School	Classroom 15	1	4L4' T12 EE/EEMAG-8'	old wrap	6	140	0.8	2L4' T8 28w/ELEE HI/NEW-8'	new wrap	6	64	0.4	0.5	1,149	2,520
IN	Interior	809	Ryerson-Elementary School	Bath 15	1	13W COMPACT HARDWI	square surface mt	1	15	0.0	NO RETRO	no change needed		15	0.0			3,320
IN	Interior	810	Ryerson-Elementary School	Classroom 6	1	4L4' T12 EE/EEMAG-8'	old wrap	3	140	0.4	2L4' T8 28w/ELEE HI/NEW-8'	new wrap	3	64	0.2	0.2	575	2,520
IN	Interior	811	Ryerson-Elementary School	Classroom 6	1	4L4' T12 EE/EEMAG-8'	old wrap	6	140	0.8	2L4' T8 28w/ELEE HI/NEW-8'	new wrap	6	64	0.4	0.5	1,149	2,520
IN	Interior	812	Ryerson-Elementary School	Bath 6	1	13W COMPACT HARDWI	square surface mt	1	15	0.0	NO RETRO	no change needed		15	0.0			3,320
IN	Interior	813	Ryerson-Elementary School	Classroom 16	1	4L4' T12 EE/EEMAG-8'	old wrap	3	140	0.4	2L4' T8 28w/ELEE HI/NEW-8'	new wrap	3	64	0.2	0.2	575	2,520
IN	Interior	814	Ryerson-Elementary School	Classroom 16	1	4L4' T12 EE/EEMAG-8'	old wrap	6	140	0.8	2L4' T8 28w/ELEE HI/NEW-8'	new wrap	6	64	0.4	0.5	1,149	2,520
IN	Interior	815	Ryerson-Elementary School	Bath 16	1	13W COMPACT HARDWI	square surface mt	1	15	0.0	NO RETRO	no change needed		15	0.0			3,320
IN	Interior	816	Ryerson-Elementary School	Hall 11-16	1	3L4' T8 32w/EL	trof acr	13	88	1.1	3L4' T8 28w/ELEE LO	rlrb	13	63	0.8	0.3	1,177	3,620

In or Out	ECM	Line	Building Name	Location	Fl	Pre Fixture Description	Pre Fixture Style	Pre Qty	Pre Watts	Pre kW	Post Fixture Description	Post Fixture Style	Post Qty	Post Watts	Post kW	kW Saved	kWH Saved	Annual Hours
IN	Interior	817	Ryerson-Elementary School	Hall 26 To 17	1	3L4' T8 32w/EL	trof acr	8	88	0.7	3L4' T8 28w/ELEE LO	rlrb	8	63	0.5	0.2	724	3,620
IN	Interior	818	Ryerson-Elementary School	Hall 26 To 17	1	2L4' T8 32w/EL	trof acr	5	60	0.3	2L4' T8 28w/ELEE LO	rlrb	5	42	0.2	0.1	326	3,620
IN	Interior	819	Ryerson-Elementary School	Classroom 17	1	2L4' T12 EE/EEMAG	old wrap	16	70	1.1	1L4' T8 28w/ELEE HI/NEW	new wrap	16	33	0.5	0.6	1,492	2,520
IN	Interior	820	Ryerson-Elementary School	Bath 17	1	13W COMPACT HARDWIR	square surface mt	1	15	0.0	NO RETRO	no change needed		15	0.0			3,320
IN	Interior	821	Ryerson-Elementary School	Storage 17	1	2L4' T12 EE/EEMAG	old wrap	2	70	0.1	1L4' T8 28w/ELEE HI/NEW	new wrap	2	33	0.1	0.1	37	500
IN	Interior	822	Ryerson-Elementary School	Hall 23 To 17	1	3L4' T8 32w/EL	trof acr	21	88	1.8	3L4' T8 28w/ELEE LO	rlrb	21	63	1.3	0.5	1,901	3,620
IN	Interior	823	Ryerson-Elementary School	Hall 23 To 17	1	3L2' T8 17w/EL	trof acr	8	47	0.4	3L2' T8 15w/ELEE LO	rlrb	8	39	0.3	0.1	232	3,620
IN	Interior	824	Ryerson-Elementary School	Hall 23 To 17	1	4L4' T8 32w/EL	decorative	1	112	0.1	4L4' T8 28w/ELEE LO	rlrb	1	83	0.1	0.0	105	3,620
IN	Interior	825	Ryerson-Elementary School	Closet Paper	1	2x13W COMPACT HARDV	drum	2	30	0.1	NO RETRO	no change needed		30	0.1			500
IN	Interior	826	Ryerson-Elementary School	Bath Women	1	2L4' T12 EE/EEMAG	old wrap	1	70	0.1	1L4' T8 28w/ELEE HI/NEW	new wrap	1	33	0.0	0.0	123	3,320
IN	Interior	827	Ryerson-Elementary School	Bath Men	1	2L4' T12 EE/EEMAG	old wrap	1	70	0.1	1L4' T8 28w/ELEE HI/NEW	new wrap	1	33	0.0	0.0	123	3,320
IN	Interior	828	Ryerson-Elementary School	Closet Clean	1	3x13W COMPACT HARDV	drum	1	45	0.0	NO RETRO	no change needed		45	0.0			500
IN	Interior	829	Ryerson-Elementary School	Office Language	1	4L4' T12 EE/EEMAG	trof acr	1	140	0.1	2L4' T8 28w/ELEE HI/RFL	rlrb rfl	1	64	0.1	0.1	176	2,320
IN	Interior	830	Ryerson-Elementary School	Classroom 5	1	4L4' T8 32w/EL-8'	old wrap	3	112	0.3	2L4' T8 28w/ELEE HI/NEW-8'	new wrap	3	64	0.2	0.1	363	2,520
IN	Interior	831	Ryerson-Elementary School	Classroom 5	1	4L4' T8 32w/EL-8'	old wrap	6	112	0.7	2L4' T8 28w/ELEE HI/NEW-8'	new wrap	6	64	0.4	0.3	726	2,520
IN	Interior	832	Ryerson-Elementary School	Bath 5	1	13W COMPACT HARDWIR	square surface mt	1	15	0.0	NO RETRO	no change needed		15	0.0			3,320
IN	Interior	833	Ryerson-Elementary School	Classroom 1	1	4L4' T12 EE/EEMAG-8'	old wrap	4	140	0.6	2L4' T8 28w/ELEE HI/NEW-8'	new wrap	4	64	0.3	0.3	766	2,520
IN	Interior	834	Ryerson-Elementary School	Classroom 1	1	4L4' T12 EE/EEMAG-8'	old wrap	8	140	1.1	2L4' T8 28w/ELEE HI/NEW-8'	new wrap	8	64	0.5	0.6	1,532	2,520
IN	Interior	835	Ryerson-Elementary School	Storage 1	1	2L4' T8 32w/EL	wrap	2	60	0.1	1L4' T8 28w/ELEE HI/NEW	new wrap	2	33	0.1	0.1	27	500
IN	Interior	836	Ryerson-Elementary School	Bath 1	1	13W COMPACT HARDWIR	square surface mt	1	15	0.0	NO RETRO	no change needed		15	0.0			3,320
IN	Interior	837	Ryerson-Elementary School	Classroom 2A	1	2L4' T12 EE/EEMAG	old wrap	4	70	0.3	1L4' T8 28w/ELEE HI/NEW	new wrap	4	33	0.1	0.1	373	2,520
IN	Interior	838	Ryerson-Elementary School	Classroom 4	1	4L4' T12 EE/EEMAG-8'	old wrap	3	140	0.4	2L4' T8 28w/ELEE HI/NEW-8'	new wrap	3	64	0.2	0.2	575	2,520
IN	Interior	839	Ryerson-Elementary School	Classroom 4	1	4L4' T12 EE/EEMAG-8'	old wrap	6	140	0.8	2L4' T8 28w/ELEE HI/NEW-8'	new wrap	6	64	0.4	0.5	1,149	2,520
IN	Interior	840	Ryerson-Elementary School	Bath 4	1	13W COMPACT HARDWIR	square surface mt	1	15	0.0	NO RETRO	no change needed		15	0.0			3,320
IN	Interior	841	Ryerson-Elementary School	Classroom 2	1	4L4' T8 32w/EL-8'	old wrap	4	112	0.4	2L4' T8 28w/ELEE HI/NEW-8'	new wrap	4	64	0.3	0.2	484	2,520
IN	Interior	842	Ryerson-Elementary School	Classroom 2	1	4L4' T8 32w/EL-8'	old wrap	8	112	0.9	2L4' T8 28w/ELEE HI/NEW-8'	new wrap	8	64	0.5	0.4	968	2,520
IN	Interior	843	Ryerson-Elementary School	Bath 2	1	13W COMPACT HARDWIR	square surface mt	1	15	0.0	NO RETRO	no change needed		15	0.0			3,320
IN	Interior	844	Ryerson-Elementary School	Classroom 3	1	4L4' T8 32w/EL-8'	old wrap	3	112	0.3	2L4' T8 28w/ELEE HI/NEW-8'	new wrap	3	64	0.2	0.1	363	2,520
IN	Interior	845	Ryerson-Elementary School	Classroom 3	1	4L4' T8 32w/EL-8'	old wrap	6	112	0.7	2L4' T8 28w/ELEE HI/NEW-8'	new wrap	6	64	0.4	0.3	726	2,520
IN	Interior	846	Ryerson-Elementary School	Bath 3	1	13W COMPACT HARDWIR	square surface mt	1	15	0.0	NO RETRO	no change needed		15	0.0			3,320
IN	Interior	847	Ryerson-Elementary School	Classroom 24	1	4L4' T8 32w/EL	trof acr	11	112	1.2	2L4' T8 28w/ELEE HI/RFL	rlrb RT8 kit	11	64	0.7	0.5	1,331	2,520
IN	Interior	848	Ryerson-Elementary School	Classroom 24	1	1L4' T8 32w/EL	task strip	1	30	0.0	1L4' T8 28w/ELEE LO/STRIP KI	rlrb strip kit	1	22	0.0	0.0	20	2,520
IN	Interior	849	Ryerson-Elementary School	Bath 24	1	2x13W COMPACT HARDV	can rec 9"	1	30	0.0	NO RETRO	no change needed		30	0.0			3,320
IN	Interior	850	Ryerson-Elementary School	Classroom 25	1	3L4' T8 32w/EL	tube light	21	88	1.8	3L4' T8 28w/ELEE LO	rlrb	21	63	1.3	0.5	1,323	2,520
IN	Interior	851	Ryerson-Elementary School	Classroom 26	1	4L4' T8 32w/EL	trof acr	15	112	1.7	2L4' T8 28w/ELEE HI/RFL	rlrb RT8 kit	15	64	1.0	0.7	1,814	2,520
IN	Interior	852	Ryerson-Elementary School	Stage Gym	1	72W COMPACT SCREWIN	high bay	5	72	0.4	NO RETRO	no change needed		72	0.4			2,320
IN	Interior	853	Ryerson-Elementary School	Stage Gym	1	300W INCANDESCENT	high bay	3	300	0.9	2L4' T8 28w/ELEE/NEW	new wrap	3	48	0.1	0.8	1,754	2,320
IN	Interior	854	Ryerson-Elementary School	Office Boiler Room	1	3x13W COMPACT HARDV	drum	6	45	0.3	NO RETRO	no change needed		45	0.3			2,320
IN	Interior	855	Ryerson-Elementary School	Office Boiler Room	1	4L4' T8 32w/EL	trof acr	1	112	0.1	2L4' T8 28w/ELEE HI/RFL	rlrb rfl	1	64	0.1	0.0	111	2,320
IN	Interior	856	Ryerson-Elementary School	Mechanical Boiler Room	1	2L4' T12 EE/EEMAG	strip reflector	10	70	0.7	2L4' T8 28w/ELEE LO	rlrb	10	42	0.4	0.3	140	500
IN	Interior	857	Ryerson-Elementary School	Gym Main	1	150W METAL HALIDE	lowbay	1	190	0.2	113 WATT LED/NEW	new LED hibay polylens	1	113	0.1	0.1	225	2,920
IN	Interior	858	Ryerson-Elementary School	Gym Main	1	250W METAL HALIDE	high bay	19	295	5.6	113 WATT LED/NEW	new LED hibay polylens	19	113	2.1	3.5	10,097	2,920
IN	Interior	859	Ryerson-Elementary School	Storage Gym	1	4L4' T8 32w/EL-8'	old wrap narrow	2	112	0.2	2L4' T8 28w/ELEE HI/NEW-8'	new wrap	2	64	0.1	0.1	204	2,120
IN	Interior	860	Ryerson-Elementary School	Lounge Teachers	1	4L4' T8 32w/EL-8'	old wrap narrow	4	112	0.4	2L4' T8 28w/ELEE HI/NEW-8'	new wrap	4	64	0.3	0.2	484	2,520
IN	Interior	861	Ryerson-Elementary School	Lounge Teachers	1	1L2' T8 17w/EL	old vanity	1	17	0.0	1L2' T8 15w/ELEE LO/NEW	new vanity	1	14	0.0	0.0	8	2,520
IN	Interior	862	Ryerson-Elementary School	Office Open Portables	1	4L4' T12 EE/EEMAG-8'	old wrap narrow	12	140	1.7	2L4' T8 28w/ELEE HI/NEW-8'	new wrap	12	64	0.8	0.9	2,481	2,720
IN	Interior	863	Ryerson-Elementary School	Office Open Portables	1	2L4' T12 EE/EEMAG	old wrap narrow	3	70	0.2	1L4' T8 28w/ELEE HI/NEW	new wrap	3	33	0.1	0.1	302	2,720
IN	Interior	864	Ryerson-Elementary School	Office Principal	1	4L4' T8 32w/EL	trof acr	1	112	0.1	2L4' T8 28w/ELEE HI/RFL	rlrb rfl	1	64	0.1	0.0	111	2,320

In or Out	ECM	Line	Building Name	Location	Fl	Pre Fixture Description	Pre Fixture Style	Pre Qty	Pre Watts	Pre kW	Post Fixture Description	Post Fixture Style	Post Qty	Post Watts	Post kW	kW Saved	kWH Saved	Annual Hours
IN	Interior	865	Ryerson-Elementary School	Office Principal	1	4L4' T12 EE/EEMAG	old wrap	1	140	0.1	2L4' T8 28w/ELEE HI/NEW	new wrap wide	1	64	0.1	0.1	176	2,320
IN	Interior	866	Ryerson-Elementary School	Closet Principal	1	100W INCANDESCENT	keyless	1	100	0.1	23W COMPACT SI/29712/CF23	screw in	1	23	0.0	0.1	39	500
IN	Interior	867	Ryerson-Elementary School	Office Open Main	1	4L4' T12 EE/EEMAG	wrap wide	4	140	0.6	2L4' T8 28w/ELEE HI/NEW	new wrap wide	4	64	0.3	0.3	827	2,720
IN	Interior	868	Ryerson-Elementary School	Office Open Main	1	2L4' T12 EE/EEMAG	wrap	1	70	0.1	1L4' T8 28w/ELEE HI/NEW	new wrap	1	33	0.0	0.0	101	2,720
IN	Interior	869	Ryerson-Elementary School	Office Open Main	1	2L4' T8 32w/EL	wrap	1	60	0.1	1L4' T8 28w/ELEE HI/NEW	new wrap	1	33	0.0	0.0	73	2,720
IN	Interior	870	Ryerson-Elementary School	Storage Paper	1	4L4' T8 32w/EL	wrap	1	112	0.1	2L4' T8 28w/ELEE HI/NEW	new wrap wide	1	64	0.1	0.0	102	2,120
IN	Interior	871	Ryerson-Elementary School	Storage Mailroom	1	4L4' T8 32w/EL	old wrap	2	112	0.2	2L4' T8 28w/ELEE/NEW	new wrap	2	48	0.1	0.1	271	2,120
IN	Interior	872	Ryerson-Elementary School	Bath Mailroom	1	60W INCANDESCENT	old vanity	1	60	0.1	2L2' T8 15w/ELEE LO/NEW	new vanity	1	24	0.0	0.0	120	3,320
IN	Interior	873	Ryerson-Elementary School	Cafeteria Seating Area	1	4L4' T8 32w/EL	trof acr	4	112	0.4	2L4' T8 28w/ELEE HI/RFL	rlrb RT8 kit	4	64	0.3	0.2	522	2,720
IN	Interior	874	Ryerson-Elementary School	Cafeteria Seating Area	1	4L4' T12 EE/EEMAG	trof acr	20	140	2.8	2L4' T8 28w/ELEE HI/RFL	rlrb RT8 kit	20	64	1.3	1.5	4,134	2,720
IN	Interior	875	Ryerson-Elementary School	Kitchen Prep Area	1	2L4' T8 32w/EL	wrap	6	60	0.4	2L4' T8 28w/ELEE LO/NEW	new wrap	6	42	0.3	0.1	207	1,920
IN	Interior	876	Ryerson-Elementary School	Kitchen Prep Area	1	2L4' T12 EE/EEMAG	old wrap narrow	10	70	0.7	2L4' T8 28w/ELEE LO/NEW	new wrap	10	42	0.4	0.3	538	1,920
IN	Interior	877	Ryerson-Elementary School	Hall Kitchen	1	2x13W COMPACT HARDV	drum	2	30	0.1	NO RETRO	no change needed		30	0.1			3,620
IN	Interior	878	Ryerson-Elementary School	Storage Dry Goods	1	2L4' T12 EE/EEMAG	wrap	2	70	0.1	1L4' T8 28w/ELEE HI/NEW	new wrap	2	33	0.1	0.1	37	500
IN	Interior	879	Ryerson-Elementary School	Storage Clean	1	2L4' T12 EE/EEMAG	wrap	2	70	0.1	1L4' T8 28w/ELEE HI/NEW	new wrap	2	33	0.1	0.1	37	500
IN	Interior	880	Ryerson-Elementary School	Kitchen Dish Wash	1	2L4' T8 32w/EL	wrap	3	60	0.2	2L4' T8 28w/ELEE LO/NEW	new wrap	3	42	0.1	0.1	104	1,920
IN	Interior	881	Ryerson-Elementary School	Classroom 18	1	4L4' T12 EE/EEMAG-8'	old wrap	3	140	0.4	2L4' T8 28w/ELEE HI/NEW-8'	new wrap	3	64	0.2	0.2	575	2,520
IN	Interior	882	Ryerson-Elementary School	Classroom 18	1	4L4' T12 EE/EEMAG-8'	old wrap	6	140	0.8	2L4' T8 28w/ELEE HI/NEW-8'	new wrap	6	64	0.4	0.5	1,149	2,520
IN	Interior	883	Ryerson-Elementary School	Bath Girls	1	4L2' T12 STD/STD	trof opaque	3	112	0.3	4L2' T8 15w/ELEE LO	rlrb	3	54	0.2	0.2	578	3,320
IN	Interior	884	Ryerson-Elementary School	Bath Staff	1	100W INCANDESCENT	can rec 6"	1	100	0.1	21 WATT LED SI/LED21Par38/D	screw in led	1	21	0.0	0.1	262	3,320
IN	Interior	885	Ryerson-Elementary School	Bath Staff	1	2L2' T8 17w/EL	vanity	1	33	0.0	2L2' T8 15w/ELEE LO/NEW	new vanity	1	24	0.0	0.0	30	3,320
IN	Interior	886	Ryerson-Elementary School	Closet Clean	1	2x40W INCANDESCENTS	old drum	1	80	0.1	2L2' T8 15w/ELEE LO/NEW	new wrap	1	24	0.0	0.1	28	500
IN	Interior	887	Ryerson-Elementary School	Bath Girls	1	4L2' T12 STD/STD	trof opaque	3	112	0.3	4L2' T8 15w/ELEE LO	rlrb	3	54	0.2	0.2	578	3,320
IN	Interior	888	Ryerson-Elementary School	Bath Staff	1	100W INCANDESCENT	can rec 6"	1	100	0.1	21 WATT LED SI/LED21Par38/D	screw in led	1	21	0.0	0.1	262	3,320
IN	Interior	889	Ryerson-Elementary School	Bath Staff	1	2L2' T8 17w/EL	vanity	1	33	0.0	2L2' T8 15w/ELEE LO/NEW	new vanity	1	24	0.0	0.0	30	3,320
IN	Interior	890	Ryerson-Elementary School	Classroom 19	1	4L4' T12 EE/EEMAG-8'	old wrap	3	140	0.4	2L4' T8 28w/ELEE HI/NEW-8'	new wrap	3	64	0.2	0.2	575	2,520
IN	Interior	891	Ryerson-Elementary School	Classroom 19	1	4L4' T12 EE/EEMAG-8'	old wrap	6	140	0.8	2L4' T8 28w/ELEE HI/NEW-8'	new wrap	6	64	0.4	0.5	1,149	2,520
IN	Interior	892	Ryerson-Elementary School	Office Reading Rom	1	4L4' T12 EE/EEMAG	trof acr	6	140	0.8	2L4' T8 28w/ELEE HI/RFL	rlrb rfl	6	64	0.4	0.5	1,058	2,320
IN	Interior	893	Ryerson-Elementary School	Library	1	4L4' T8 32w/EL	trof acr	25	112	2.8	2L4' T8 28w/ELEE HI/RFL	rlrb RT8 kit	25	64	1.6	1.2	3,024	2,520
IN	Interior	894	Ryerson-Elementary School	Library Office	1	4L4' T12 EE/EEMAG	trof acr	2	140	0.3	2L4' T8 28w/ELEE HI/RFL	rlrb RT8 kit	2	64	0.1	0.2	383	2,520
IN	Interior	895	Ryerson-Elementary School	Storage Server	1	4L4' T12 EE/EEMAG-8'	old wrap	1	140	0.1	2L4' T8 28w/ELEE HI/NEW-8'	new wrap	1	64	0.1	0.1	38	500
IN	Interior	896	Ryerson-Elementary School	Office Guidance	1	4L4' T12 EE/EEMAG	trof acr	4	140	0.6	2L4' T8 28w/ELEE HI/RFL	rlrb rfl	4	64	0.3	0.3	705	2,320
IN	Interior	897	Ryerson-Elementary School	Classroom 20	1	4L4' T12 EE/EEMAG-8'	old wrap	3	140	0.4	2L4' T8 28w/ELEE HI/NEW-8'	new wrap	3	64	0.2	0.2	575	2,520
IN	Interior	898	Ryerson-Elementary School	Classroom 20	1	4L4' T12 EE/EEMAG-8'	old wrap	6	140	0.8	2L4' T8 28w/ELEE HI/NEW-8'	new wrap	6	64	0.4	0.5	1,149	2,520
IN	Interior	899	Ryerson-Elementary School	Classroom 21	1	4L4' T12 EE/EEMAG-8'	old wrap	3	140	0.4	2L4' T8 28w/ELEE HI/NEW-8'	new wrap	3	64	0.2	0.2	575	2,520
IN	Interior	900	Ryerson-Elementary School	Classroom 21	1	4L4' T12 EE/EEMAG-8'	old wrap	6	140	0.8	2L4' T8 28w/ELEE HI/NEW-8'	new wrap	6	64	0.4	0.5	1,149	2,520
IN	Interior	901	Ryerson-Elementary School	Classroom 22	1	4L4' T12 EE/EEMAG-8'	old wrap	3	140	0.4	2L4' T8 28w/ELEE HI/NEW-8'	new wrap	3	64	0.2	0.2	575	2,520
IN	Interior	902	Ryerson-Elementary School	Classroom 22	1	2L4' T12 EE/EEMAG	old wrap	1	70	0.1	1L4' T8 28w/ELEE HI/NEW	new wrap	1	33	0.0	0.0	93	2,520
IN	Interior	903	Ryerson-Elementary School	Classroom 22	1	4L4' T12 EE/EEMAG-8'	old wrap	5	140	0.7	2L4' T8 28w/ELEE HI/NEW-8'	new wrap	5	64	0.3	0.4	958	2,520
IN	Interior	904	Ryerson-Elementary School	Classroom 22	1	2L4' T12 EE/EEMAG	old wrap	2	70	0.1	1L4' T8 28w/ELEE HI/NEW	new wrap	2	33	0.1	0.1	186	2,520
IN	Interior	905	Ryerson-Elementary School	Classroom 23	1	4L4' T12 EE/EEMAG-8'	old wrap	3	140	0.4	2L4' T8 28w/ELEE HI/NEW-8'	new wrap	3	64	0.2	0.2	575	2,520
IN	Interior	906	Ryerson-Elementary School	Classroom 23	1	4L4' T12 EE/EEMAG-8'	old wrap	6	140	0.8	2L4' T8 28w/ELEE HI/NEW-8'	new wrap	6	64	0.4	0.5	1,149	2,520
IN	Exterior	907	Ryerson-Elementary School	Bldg Mt Fixture 1	ext	50W HI PRESSURE SODI	canopy	7	65	0.5	26 WATT LED/NEW	new LED exterior area lig	7	26	0.2	0.3	1,196	4,380
IN	Exterior	908	Ryerson-Elementary School	Bldg Mt Fixture 2	ext	50W HI PRESSURE SODI	wallpack	2	65	0.1	26 WATT LED/NEW	new LED wallpack	2	26	0.1	0.1	342	4,380
IN	Exterior	909	Ryerson-Elementary School	Bldg Mt Fixture 3	ext	50W HI PRESSURE SODI	square recessed	1	65	0.1	23W COMPACT SI/29712/CF23	screw in	1	23	0.0	0.0	184	4,380
IN	Exterior	910	Ryerson-Elementary School	Bldg Mt Fixture 4	ext	250W HI PRESSURE SOD	wallpack	12	295	3.5	133 WATT LED/NEW	new LED wallpack	12	133	1.6	1.9	8,515	4,380
IN	Exterior	911	Ryerson-Elementary School	Bldg Mt Fixture 4	ext	250W HI PRESSURE SOD	wallpack	2	295	0.6	133 WATT LED/NEW	new LED wallpack	2	133	0.3	0.3	1,419	4,380
IN	Exterior	912	Ryerson-Elementary School	Bldg Mt Fixture 5	ext	400W HI PRESSURE SOD	flood	1	460	0.5	231 WATT LED/NEW	new LED flood	1	231	0.2	0.2	1,003	4,380

In or Out	ECM	Line	Building Name	Location	Fl	Pre Fixture Description	Pre Fixture Style	Pre Qty	Pre Watts	Pre kW	Post Fixture Description	Post Fixture Style	Post Qty	Post Watts	Post kW	kW Saved	kWH Saved	Annual Hours
IN	Exterior	913	Ryerson-Elementary School	Bldg Mt Fixture 6	ext	100W HI PRESSURE SOD	canopy	1	130	0.1	50 WATT LED/NEW	new LED exterior area lig	1	50	0.1	0.1	350	4,380
IN	Exterior	914	Ryerson-Elementary School	Bldg Mt Fixture 7	ext	250W HI PRESSURE SOD	flood	1	295	0.3	133 WATT LED/NEW	new LED flood	1	133	0.1	0.2	710	4,380
IN	Interior	915	James Fallon-Elementary Sc	Gym Main	1	400W METAL HALIDE	high bay	16	455	7.3	172 WATT LED/NEW	new LED hibay polylens	16	172	2.8	4.5	13,222	2,920
IN	Interior	916	James Fallon-Elementary Sc	Stage	1	50W INCANDESCENT	track head	9	50	0.5	20 WATT LED/NEW	new LED track head	9	20	0.2	0.3	788	2,920
IN	Interior	917	James Fallon-Elementary Sc	Stage	1	150W INCANDESCENT	track head	9	150	1.4	20 WATT LED/NEW	new LED track head	9	20	0.2	1.2	3,416	2,920
IN	Interior	918	James Fallon-Elementary Sc	Hall Left Of Stage	1	2L2' F40 BIAX/EL	troffer indirect	3	72	0.2	2L2' F40BIAX/EL28W	rlrb	3	63	0.2	0.0	98	3,620
IN	Interior	919	James Fallon-Elementary Sc	Hall Right Of Stage	1	2L2' F40 BIAX/EL	troffer indirect	3	72	0.2	2L2' F40BIAX/EL28W	rlrb	3	63	0.2	0.0	98	3,620
IN	Interior	920	James Fallon-Elementary Sc	Bath Boys	1	2L2' F40 BIAX/EL	troffer indirect	1	72	0.1	2L2' F40BIAX/EL28W	rlrb	1	63	0.1	0.0	30	3,320
IN	Interior	921	James Fallon-Elementary Sc	Bath Boys	1	4L4' T8 32w/EL-8'	soffit	2	112	0.2	4L4' T8 28w/ELEE LO-8'	rlrb	2	83	0.2	0.1	193	3,320
IN	Interior	922	James Fallon-Elementary Sc	Bath Girls	1	2L2' F40 BIAX/EL	troffer indirect	1	72	0.1	2L2' F40BIAX/EL28W	rlrb	1	63	0.1	0.0	30	3,320
IN	Interior	923	James Fallon-Elementary Sc	Bath Girls	1	4L4' T8 32w/EL-8'	soffit	2	112	0.2	4L4' T8 28w/ELEE LO-8'	rlrb	2	83	0.2	0.1	193	3,320
IN	Interior	924	James Fallon-Elementary Sc	Hall By Baths	1	2x18W COMPACT HARDV	can rec 9"	2	38	0.1	NO RETRO	no change needed		38	0.1			3,620
IN	Interior	925	James Fallon-Elementary Sc	Storage Gym	1	2L2' F40 BIAX/EL	troffer indirect	4	72	0.3	2L2' F40BIAX/EL28W	rlrb	4	63	0.3	0.0	76	2,120
IN	Interior	926	James Fallon-Elementary Sc	Classroom 42	1	2x18W COMPACT HARDV	can rec 9"	4	38	0.2	NO RETRO	no change needed		38	0.2			2,520
IN	Interior	927	James Fallon-Elementary Sc	Classroom 42	1	3L4' T8 U 1.5" /EL	trof parabolic	20	85	1.7	2L2' T8 15w/ELEE HI/RFL	rlrb RT8 kit	20	33	0.7	1.0	2,621	2,520
IN	Interior	928	James Fallon-Elementary Sc	Classroom 42	1	22W CIRCLELINE HARDW	drum	4	24	0.1	2L2' T8 15w/ELEE LO/NEW	new wrap	4	24	0.1			2,520
IN	Interior	929	James Fallon-Elementary Sc	Classroom 41	1	3L4' T8 32w/EL	trof parabolic	1	88	0.1	2L4' T8 28w/ELEE HI/RFL	rlrb RT8 kit	1	64	0.1	0.0	60	2,520
IN	Interior	930	James Fallon-Elementary Sc	Classroom 41	1	3L4' T8 U 1.5" /EL	trof parabolic	11	85	0.9	2L2' T8 15w/ELEE HI/RFL	rlrb RT8 kit	11	33	0.4	0.6	1,441	2,520
IN	Interior	931	James Fallon-Elementary Sc	Classroom 41	1	22W CIRCLELINE HARDW	drum	4	24	0.1	2L2' T8 15w/ELEE LO/NEW	new wrap	4	24	0.1			2,520
IN	Interior	932	James Fallon-Elementary Sc	Classroom 41	1	2x18W COMPACT HARDV	can rec 9"	3	38	0.1	NO RETRO	no change needed		38	0.1			2,520
IN	Interior	933	James Fallon-Elementary Sc	Hall By Gym	1	3L4' T8 U 1.5" /EL	trof parabolic	5	85	0.4	2L2' T8 15w/ELEE HI/RFL	rlrb RT8 kit	5	33	0.2	0.3	941	3,620
IN	Interior	934	James Fallon-Elementary Sc	Hall By Gym	1	3L2' T8 17w/EL	trof parabolic	1	47	0.0	3L2' T8 15w/ELEE LO	rlrb	1	39	0.0	0.0	29	3,620
IN	Interior	935	James Fallon-Elementary Sc	Hall By Gym	1	2L4' T8 32w/EL	troffer indirect	7	60	0.4	2L4' T8 28w/ELEE LO	rlrb	7	42	0.3	0.1	456	3,620
IN	Interior	936	James Fallon-Elementary Sc	Hall By Gym	1	2L2' F40 BIAX/EL	troffer indirect	2	72	0.1	2L2' F40BIAX/EL28W	rlrb	2	63	0.1	0.0	65	3,620
IN	Interior	937	James Fallon-Elementary Sc	Classroom 39	1	3L4' T8 32w/EL	trof para dbl switc	9	88	0.8	2L4' T8 28w/ELEE HI/RFL	rlrb RT8 kit	9	64	0.6	0.2	544	2,520
IN	Interior	938	James Fallon-Elementary Sc	Classroom 39	1	1L2' F40 BIAX/EL	wallwash	2	46	0.1	1L2' F40BIAX/EL28W	rlrb	2	32	0.1	0.0	71	2,520
IN	Interior	939	James Fallon-Elementary Sc	Classroom 39	1	1L2' F40 BIAX/EL	wallwash	2	46	0.1	1L2' F40BIAX/EL28W	rlrb	2	32	0.1	0.0	71	2,520
IN	Interior	940	James Fallon-Elementary Sc	Classroom 39	1	2x18W COMPACT HARDV	can rec 9"	1	38	0.0	NO RETRO	no change needed		38	0.0			2,520
IN	Interior	941	James Fallon-Elementary Sc	Bath 39	1	60W INCANDESCENT	exhaust fan light	1	60	0.1	11W COMPACT SI/29708/CF11	screw in	1	11	0.0	0.0	163	3,320
IN	Interior	942	James Fallon-Elementary Sc	Classroom 38	1	3L4' T8 32w/EL	trof para dbl switc	9	88	0.8	2L4' T8 28w/ELEE HI/RFL	rlrb RT8 kit	9	64	0.6	0.2	544	2,520
IN	Interior	943	James Fallon-Elementary Sc	Classroom 38	1	1L2' F40 BIAX/EL	wallwash	2	46	0.1	1L2' F40BIAX/EL28W	rlrb	2	32	0.1	0.0	71	2,520
IN	Interior	944	James Fallon-Elementary Sc	Classroom 38	1	1L2' F40 BIAX/EL	wallwash	2	46	0.1	1L2' F40BIAX/EL28W	rlrb	2	32	0.1	0.0	71	2,520
IN	Interior	945	James Fallon-Elementary Sc	Classroom 38	1	2x18W COMPACT HARDV	can rec 9"	1	38	0.0	NO RETRO	no change needed		38	0.0			2,520
IN	Interior	946	James Fallon-Elementary Sc	Bath 38	1	60W INCANDESCENT	exhaust fan light	1	60	0.1	11W COMPACT SI/29708/CF11	screw in	1	11	0.0	0.0	163	3,320
IN	Interior	947	James Fallon-Elementary Sc	Classroom 37	1	3L4' T8 32w/EL	trof para dbl switc	9	88	0.8	2L4' T8 28w/ELEE HI/RFL	rlrb RT8 kit	9	64	0.6	0.2	544	2,520
IN	Interior	948	James Fallon-Elementary Sc	Classroom 37	1	1L2' F40 BIAX/EL	wallwash	2	46	0.1	1L2' F40BIAX/EL28W	rlrb	2	32	0.1	0.0	71	2,520
IN	Interior	949	James Fallon-Elementary Sc	Classroom 37	1	1L2' F40 BIAX/EL	wallwash	2	46	0.1	1L2' F40BIAX/EL28W	rlrb	2	32	0.1	0.0	71	2,520
IN	Interior	950	James Fallon-Elementary Sc	Classroom 37	1	2x18W COMPACT HARDV	can rec 9"	1	38	0.0	NO RETRO	no change needed		38	0.0			2,520
IN	Interior	951	James Fallon-Elementary Sc	Bath 37	1	60W INCANDESCENT	exhaust fan light	1	60	0.1	11W COMPACT SI/29708/CF11	screw in	1	11	0.0	0.0	163	3,320
IN	Interior	952	James Fallon-Elementary Sc	Classroom 36	1	3L4' T8 32w/EL	trof para dbl switc	9	88	0.8	2L4' T8 28w/ELEE HI/RFL	rlrb RT8 kit	9	64	0.6	0.2	544	2,520
IN	Interior	953	James Fallon-Elementary Sc	Classroom 36	1	1L2' F40 BIAX/EL	wallwash	2	46	0.1	1L2' F40BIAX/EL28W	rlrb	2	32	0.1	0.0	71	2,520
IN	Interior	954	James Fallon-Elementary Sc	Classroom 36	1	1L2' F40 BIAX/EL	wallwash	2	46	0.1	1L2' F40BIAX/EL28W	rlrb	2	32	0.1	0.0	71	2,520
IN	Interior	955	James Fallon-Elementary Sc	Classroom 36	1	2x18W COMPACT HARDV	can rec 9"	1	38	0.0	NO RETRO	no change needed		38	0.0			2,520
IN	Interior	956	James Fallon-Elementary Sc	Bath 36	1	60W INCANDESCENT	exhaust fan light	1	60	0.1	11W COMPACT SI/29708/CF11	screw in	1	11	0.0	0.0	163	3,320
IN	Interior	957	James Fallon-Elementary Sc	Classroom 35	1	3L4' T8 32w/EL	trof para dbl switc	9	88	0.8	2L4' T8 28w/ELEE HI/RFL	rlrb RT8 kit	9	64	0.6	0.2	544	2,520
IN	Interior	958	James Fallon-Elementary Sc	Classroom 35	1	1L2' F40 BIAX/EL	wallwash	2	46	0.1	1L2' F40BIAX/EL28W	rlrb	2	32	0.1	0.0	71	2,520
IN	Interior	959	James Fallon-Elementary Sc	Classroom 35	1	1L2' F40 BIAX/EL	wallwash	2	46	0.1	1L2' F40BIAX/EL28W	rlrb	2	32	0.1	0.0	71	2,520
IN	Interior	960	James Fallon-Elementary Sc	Classroom 35	1	2x18W COMPACT HARDV	can rec 9"	1	38	0.0	NO RETRO	no change needed		38	0.0			2,520

In or Out	ECM	Line	Building Name	Location	Fl	Pre Fixture Description	Pre Fixture Style	Pre Qty	Pre Watts	Pre kW	Post Fixture Description	Post Fixture Style	Post Qty	Post Watts	Post kW	kW Saved	kWH Saved	Annual Hours
IN	Interior	961	James Fallon-Elementary Sc	Bath 35	1	60W INCANDESCENT	exhaust fan light	1	60	0.1	11W COMPACT SI/29708/CF11	screw in	1	11	0.0	0.0	163	3,320
IN	Interior	962	James Fallon-Elementary Sc	Classroom 34	1	3L4' T8 32w/EL	trof para dbl switc	9	88	0.8	2L4' T8 28w/ELEE HI/RFL	rlrb RT8 kit	9	64	0.6	0.2	544	2,520
IN	Interior	963	James Fallon-Elementary Sc	Classroom 34	1	1L2' F40 BIAX/EL	wallwash	2	46	0.1	1L2' F40BIAX/EL28W	rlrb	2	32	0.1	0.0	71	2,520
IN	Interior	964	James Fallon-Elementary Sc	Classroom 34	1	1L2' F40 BIAX/EL	wallwash	2	46	0.1	1L2' F40BIAX/EL28W	rlrb	2	32	0.1	0.0	71	2,520
IN	Interior	965	James Fallon-Elementary Sc	Classroom 34	1	2x18W COMPACT HARDV	can rec 9"	1	38	0.0	NO RETRO	no change needed		38	0.0			2,520
IN	Interior	966	James Fallon-Elementary Sc	Bath 34	1	60W INCANDESCENT	exhaust fan light	1	60	0.1	11W COMPACT SI/29708/CF11	screw in	1	11	0.0	0.0	163	3,320
IN	Interior	967	James Fallon-Elementary Sc	Classroom 33	1	3L4' T8 32w/EL	trof para dbl switc	9	88	0.8	2L4' T8 28w/ELEE HI/RFL	rlrb RT8 kit	9	64	0.6	0.2	544	2,520
IN	Interior	968	James Fallon-Elementary Sc	Classroom 33	1	1L2' F40 BIAX/EL	wallwash	2	46	0.1	1L2' F40BIAX/EL28W	rlrb	2	32	0.1	0.0	71	2,520
IN	Interior	969	James Fallon-Elementary Sc	Classroom 33	1	1L2' F40 BIAX/EL	wallwash	2	46	0.1	1L2' F40BIAX/EL28W	rlrb	2	32	0.1	0.0	71	2,520
IN	Interior	970	James Fallon-Elementary Sc	Classroom 33	1	2x18W COMPACT HARDV	can rec 9"	1	38	0.0	NO RETRO	no change needed		38	0.0			2,520
IN	Interior	971	James Fallon-Elementary Sc	Bath 33	1	60W INCANDESCENT	exhaust fan light	1	60	0.1	11W COMPACT SI/29708/CF11	screw in	1	11	0.0	0.0	163	3,320
IN	Interior	972	James Fallon-Elementary Sc	Classroom 32	1	3L4' T8 32w/EL	trof para dbl switc	9	88	0.8	2L4' T8 28w/ELEE HI/RFL	rlrb RT8 kit	9	64	0.6	0.2	544	2,520
IN	Interior	973	James Fallon-Elementary Sc	Classroom 32	1	1L2' F40 BIAX/EL	wallwash	2	46	0.1	1L2' F40BIAX/EL28W	rlrb	2	32	0.1	0.0	71	2,520
IN	Interior	974	James Fallon-Elementary Sc	Classroom 32	1	1L2' F40 BIAX/EL	wallwash	2	46	0.1	1L2' F40BIAX/EL28W	rlrb	2	32	0.1	0.0	71	2,520
IN	Interior	975	James Fallon-Elementary Sc	Classroom 32	1	2x18W COMPACT HARDV	can rec 9"	1	38	0.0	NO RETRO	no change needed		38	0.0			2,520
IN	Interior	976	James Fallon-Elementary Sc	Bath 32	1	60W INCANDESCENT	exhaust fan light	1	60	0.1	11W COMPACT SI/29708/CF11	screw in	1	11	0.0	0.0	163	3,320
IN	Interior	977	James Fallon-Elementary Sc	Classroom 31	1	3L4' T8 32w/EL	trof para dbl switc	9	88	0.8	2L4' T8 28w/ELEE HI/RFL	rlrb RT8 kit	9	64	0.6	0.2	544	2,520
IN	Interior	978	James Fallon-Elementary Sc	Classroom 31	1	1L2' F40 BIAX/EL	wallwash	2	46	0.1	1L2' F40BIAX/EL28W	rlrb	2	32	0.1	0.0	71	2,520
IN	Interior	979	James Fallon-Elementary Sc	Classroom 31	1	1L2' F40 BIAX/EL	wallwash	2	46	0.1	1L2' F40BIAX/EL28W	rlrb	2	32	0.1	0.0	71	2,520
IN	Interior	980	James Fallon-Elementary Sc	Classroom 31	1	2x18W COMPACT HARDV	can rec 9"	1	38	0.0	NO RETRO	no change needed		38	0.0			2,520
IN	Interior	981	James Fallon-Elementary Sc	Bath 31	1	60W INCANDESCENT	exhaust fan light	1	60	0.1	11W COMPACT SI/29708/CF11	screw in	1	11	0.0	0.0	163	3,320
IN	Interior	982	James Fallon-Elementary Sc	Closet Paper	1	2L4' T8 32w/EL	wrap	2	60	0.1	1L4' T8 28w/ELEE HI/NEW	new wrap	2	33	0.1	0.1	27	500
IN	Interior	983	James Fallon-Elementary Sc	Closet Server	1	2L4' T8 32w/EL	wrap	1	60	0.1	1L4' T8 28w/ELEE HI/NEW	new wrap	1	33	0.0	0.0	14	500
IN	Interior	984	James Fallon-Elementary Sc	Closet Clean	1	2L4' T8 32w/EL	wrap	1	60	0.1	1L4' T8 28w/ELEE HI/NEW	new wrap	1	33	0.0	0.0	14	500
IN	Interior	985	James Fallon-Elementary Sc	Storage Toilet Paper	1	2L4' T8 32w/EL	wrap	1	60	0.1	1L4' T8 28w/ELEE HI/NEW	new wrap	1	33	0.0	0.0	14	500
IN	Interior	986	James Fallon-Elementary Sc	Classroom 30	1	3L4' T8 32w/EL	trof para dbl switc	9	88	0.8	2L4' T8 28w/ELEE HI/RFL	rlrb RT8 kit	9	64	0.6	0.2	544	2,520
IN	Interior	987	James Fallon-Elementary Sc	Classroom 30	1	1L2' F40 BIAX/EL	wallwash	2	46	0.1	1L2' F40BIAX/EL28W	rlrb	2	32	0.1	0.0	71	2,520
IN	Interior	988	James Fallon-Elementary Sc	Classroom 30	1	1L2' F40 BIAX/EL	wallwash	2	46	0.1	1L2' F40BIAX/EL28W	rlrb	2	32	0.1	0.0	71	2,520
IN	Interior	989	James Fallon-Elementary Sc	Classroom 30	1	2x18W COMPACT HARDV	can rec 9"	1	38	0.0	NO RETRO	no change needed		38	0.0			2,520
IN	Interior	990	James Fallon-Elementary Sc	Bath 30	1	60W INCANDESCENT	exhaust fan light	1	60	0.1	11W COMPACT SI/29708/CF11	screw in	1	11	0.0	0.0	163	3,320
IN	Interior	991	James Fallon-Elementary Sc	Classroom 29	1	3L4' T8 32w/EL	trof para dbl switc	9	88	0.8	2L4' T8 28w/ELEE HI/RFL	rlrb RT8 kit	9	64	0.6	0.2	544	2,520
IN	Interior	992	James Fallon-Elementary Sc	Classroom 29	1	1L2' F40 BIAX/EL	wallwash	2	46	0.1	1L2' F40BIAX/EL28W	rlrb	2	32	0.1	0.0	71	2,520
IN	Interior	993	James Fallon-Elementary Sc	Classroom 29	1	1L2' F40 BIAX/EL	wallwash	2	46	0.1	1L2' F40BIAX/EL28W	rlrb	2	32	0.1	0.0	71	2,520
IN	Interior	994	James Fallon-Elementary Sc	Classroom 29	1	2x18W COMPACT HARDV	can rec 9"	1	38	0.0	NO RETRO	no change needed		38	0.0			2,520
IN	Interior	995	James Fallon-Elementary Sc	Bath 29	1	60W INCANDESCENT	exhaust fan light	1	60	0.1	11W COMPACT SI/29708/CF11	screw in	1	11	0.0	0.0	163	3,320
IN	Interior	996	James Fallon-Elementary Sc	Classroom 27	1	3L4' T8 32w/EL	trof para dbl switc	9	88	0.8	2L4' T8 28w/ELEE HI/RFL	rlrb RT8 kit	9	64	0.6	0.2	544	2,520
IN	Interior	997	James Fallon-Elementary Sc	Classroom 27	1	1L2' F40 BIAX/EL	wallwash	2	46	0.1	1L2' F40BIAX/EL28W	rlrb	2	32	0.1	0.0	71	2,520
IN	Interior	998	James Fallon-Elementary Sc	Classroom 27	1	1L2' F40 BIAX/EL	wallwash	2	46	0.1	1L2' F40BIAX/EL28W	rlrb	2	32	0.1	0.0	71	2,520
IN	Interior	999	James Fallon-Elementary Sc	Classroom 27	1	2x18W COMPACT HARDV	can rec 9"	1	38	0.0	NO RETRO	no change needed		38	0.0			2,520
IN	Interior	1000	James Fallon-Elementary Sc	Bath 27	1	60W INCANDESCENT	exhaust fan light	1	60	0.1	11W COMPACT SI/29708/CF11	screw in	1	11	0.0	0.0	163	3,320
IN	Interior	1001	James Fallon-Elementary Sc	Classroom 25	1	3L4' T8 32w/EL	trof para dbl switc	9	88	0.8	2L4' T8 28w/ELEE HI/RFL	rlrb RT8 kit	9	64	0.6	0.2	544	2,520
IN	Interior	1002	James Fallon-Elementary Sc	Classroom 25	1	1L2' F40 BIAX/EL	wallwash	2	46	0.1	1L2' F40BIAX/EL28W	rlrb	2	32	0.1	0.0	71	2,520
IN	Interior	1003	James Fallon-Elementary Sc	Classroom 25	1	1L2' F40 BIAX/EL	wallwash	2	46	0.1	1L2' F40BIAX/EL28W	rlrb	2	32	0.1	0.0	71	2,520
IN	Interior	1004	James Fallon-Elementary Sc	Classroom 25	1	2x18W COMPACT HARDV	can rec 9"	1	38	0.0	NO RETRO	no change needed		38	0.0			2,520
IN	Interior	1005	James Fallon-Elementary Sc	Bath 25	1	60W INCANDESCENT	exhaust fan light	1	60	0.1	11W COMPACT SI/29708/CF11	screw in	1	11	0.0	0.0	163	3,320
IN	Interior	1006	James Fallon-Elementary Sc	Classroom 24	1	3L4' T8 32w/EL	trof para dbl switc	9	88	0.8	2L4' T8 28w/ELEE HI/RFL	rlrb RT8 kit	9	64	0.6	0.2	544	2,520
IN	Interior	1007	James Fallon-Elementary Sc	Classroom 24	1	1L2' F40 BIAX/EL	wallwash	2	46	0.1	1L2' F40BIAX/EL28W	rlrb	2	32	0.1	0.0	71	2,520
IN	Interior	1008	James Fallon-Elementary Sc	Classroom 24	1	1L2' F40 BIAX/EL	wallwash	2	46	0.1	1L2' F40BIAX/EL28W	rlrb	2	32	0.1	0.0	71	2,520

In or Out	ECM	Line	Building Name	Location	Fl	Pre Fixture Description	Pre Fixture Style	Pre Qty	Pre Watts	Pre kW	Post Fixture Description	Post Fixture Style	Post Qty	Post Watts	Post kW	kW Saved	kWH Saved	Annual Hours
IN	Interior	1009	James Fallon-Elementary Sc	Classroom 24	1	2x18W COMPACT HARDV	can rec 9"	1	38	0.0	NO RETRO	no change needed		38	0.0			2,520
IN	Interior	1010	James Fallon-Elementary Sc	Bath 24	1	60W INCANDESCENT	exhaust fan light	1	60	0.1	11W COMPACT SI/29708/CF11	screw in	1	11	0.0	0.0	163	3,320
IN	Interior	1011	James Fallon-Elementary Sc	Classroom 23	1	3L4' T8 32w/EL	trof para dbl switc	9	88	0.8	2L4' T8 28w/ELEE HI/RFL	rlrb RT8 kit	9	64	0.6	0.2	544	2,520
IN	Interior	1012	James Fallon-Elementary Sc	Classroom 23	1	1L2' F40 BIAX/EL	wallwash	2	46	0.1	1L2' F40BIAX/EL28W	rlrb	2	32	0.1	0.0	71	2,520
IN	Interior	1013	James Fallon-Elementary Sc	Classroom 23	1	1L2' F40 BIAX/EL	wallwash	2	46	0.1	1L2' F40BIAX/EL28W	rlrb	2	32	0.1	0.0	71	2,520
IN	Interior	1014	James Fallon-Elementary Sc	Classroom 23	1	2x18W COMPACT HARDV	can rec 9"	1	38	0.0	NO RETRO	no change needed		38	0.0			2,520
IN	Interior	1015	James Fallon-Elementary Sc	Bath 23	1	60W INCANDESCENT	exhaust fan light	1	60	0.1	11W COMPACT SI/29708/CF11	screw in	1	11	0.0	0.0	163	3,320
IN	Interior	1016	James Fallon-Elementary Sc	Classroom 22	1	3L4' T8 32w/EL	trof para dbl switc	9	88	0.8	2L4' T8 28w/ELEE HI/RFL	rlrb RT8 kit	9	64	0.6	0.2	544	2,520
IN	Interior	1017	James Fallon-Elementary Sc	Classroom 22	1	1L2' F40 BIAX/EL	wallwash	2	46	0.1	1L2' F40BIAX/EL28W	rlrb	2	32	0.1	0.0	71	2,520
IN	Interior	1018	James Fallon-Elementary Sc	Classroom 22	1	1L2' F40 BIAX/EL	wallwash	2	46	0.1	1L2' F40BIAX/EL28W	rlrb	2	32	0.1	0.0	71	2,520
IN	Interior	1019	James Fallon-Elementary Sc	Classroom 22	1	2x18W COMPACT HARDV	can rec 9"	1	38	0.0	NO RETRO	no change needed		38	0.0			2,520
IN	Interior	1020	James Fallon-Elementary Sc	Bath 22	1	60W INCANDESCENT	exhaust fan light	1	60	0.1	11W COMPACT SI/29708/CF11	screw in	1	11	0.0	0.0	163	3,320
IN	Interior	1021	James Fallon-Elementary Sc	Hall 22-39	1	2L4' T8 32w/EL	troffer indirect	31	60	1.9	2L4' T8 28w/ELEE LO	rlrb	31	42	1.3	0.6	2,020	3,620
IN	Interior	1022	James Fallon-Elementary Sc	Bath Staff	1	2L4' T8 32w/EL	wrap	1	60	0.1	1L4' T8 28w/ELEE HI/NEW	new wrap	1	33	0.0	0.0	90	3,320
IN	Interior	1023	James Fallon-Elementary Sc	Classroom 21	1	3L4' T8 32w/EL	trof parabolic	2	88	0.2	2L4' T8 28w/ELEE HI/RFL	rlrb RT8 kit	2	64	0.1	0.0	121	2,520
IN	Interior	1024	James Fallon-Elementary Sc	Library	1	2x18W COMPACT HARDV	can rec 9"	18	38	0.7	NO RETRO	no change needed		38	0.7			2,520
IN	Interior	1025	James Fallon-Elementary Sc	Library	1	6L4' T8 32w/EL-8'	indirect/direct	5	180	0.9	6L4' T8 28w/ELEE LO-8'	rlrb	5	126	0.6	0.3	680	2,520
IN	Interior	1026	James Fallon-Elementary Sc	Library	1	3L4' T8 32w/EL	indirect/direct	7	88	0.6	3L4' T8 28w/ELEE LO	rlrb	7	63	0.4	0.2	441	2,520
IN	Interior	1027	James Fallon-Elementary Sc	Library	1	6L2' F40 BIAX/EL	indirect/direct	9	204	1.8	3L2' F40BIAX/EL28W	rlrb	18	94	1.7	0.1	363	2,520
IN	Interior	1028	James Fallon-Elementary Sc	Library	1	50W LO VOLT INC HALO	can rec 4"	6	60	0.4	10 WATT LED SI	mr16 led	6	10	0.1	0.3	756	2,520
IN	Interior	1029	James Fallon-Elementary Sc	Office 20A	1	3L4' T8 32w/EL	trof parabolic	2	88	0.2	2L4' T8 28w/ELEE HI/RFL	rlrb rfl	2	64	0.1	0.0	111	2,320
IN	Interior	1030	James Fallon-Elementary Sc	Storage Electrical	1	2L4' T8 32w/EL	troffer indirect	4	60	0.2	2L4' T8 28w/ELEE LO	rlrb	4	42	0.2	0.1	36	500
IN	Interior	1031	James Fallon-Elementary Sc	Bath Girls	1	2x18W COMPACT HARDV	can rec 9"	1	38	0.0	NO RETRO	no change needed		38	0.0			3,320
IN	Interior	1032	James Fallon-Elementary Sc	Bath Girls	1	4L4' T8 32w/EL-8'	soffit	2	112	0.2	4L4' T8 28w/ELEE LO-8'	rlrb	2	83	0.2	0.1	193	3,320
IN	Interior	1033	James Fallon-Elementary Sc	Bath Boys	1	2x18W COMPACT HARDV	can rec 9"	1	38	0.0	NO RETRO	no change needed		38	0.0			3,320
IN	Interior	1034	James Fallon-Elementary Sc	Bath Boys	1	4L4' T8 32w/EL-8'	soffit	2	112	0.2	4L4' T8 28w/ELEE LO-8'	rlrb	2	83	0.2	0.1	193	3,320
IN	Interior	1035	James Fallon-Elementary Sc	Hall By Bath	1	3L4' T8 U 1.5" /EL	trof parabolic	2	85	0.2	2L2' T8 15w/ELEE HI/RFL	rlrb RT8 kit	2	33	0.1	0.1	376	3,620
IN	Interior	1036	James Fallon-Elementary Sc	Hall By Main Office	1	2L4' T8 32w/EL	troffer indirect	3	60	0.2	2L4' T8 28w/ELEE LO	rlrb	3	42	0.1	0.1	195	3,620
IN	Interior	1037	James Fallon-Elementary Sc	Lobby By Main Office	1	2x18W COMPACT HARDV	can rec 9"	15	38	0.6	NO RETRO	no change needed		38	0.6			3,620
IN	Interior	1038	James Fallon-Elementary Sc	Lobby By Main Office	1	150W METAL HALIDE	can rec 12"	10	190	1.9	22 WATT LED/KIT	Spectrum Lighting can re	10	22	0.2	1.7	6,082	3,620
IN	Interior	1039	James Fallon-Elementary Sc	Lobby By Main Office	1	22W CIRCLELINE HARDV	drum	6	24	0.1	2L2' T8 15w/ELEE LO/NEW	new wrap	6	24	0.1			3,620
IN	Interior	1040	James Fallon-Elementary Sc	Office Open Main	1	3L4' T8 U 1.5" /EL	trof parabolic	9	85	0.8	2L2' T8 15w/ELEE HI/RFL	rlrb RT8 kit	9	33	0.3	0.5	1,273	2,720
IN	Interior	1041	James Fallon-Elementary Sc	Conference 28B	1	3L4' T8 32w/EL	trof parabolic	2	88	0.2	2L4' T8 28w/ELEE HI/RFL	rlrb rfl	2	64	0.1	0.0	111	2,320
IN	Interior	1042	James Fallon-Elementary Sc	Office Principal	1	3L4' T8 32w/EL	trof parabolic	5	88	0.4	2L4' T8 28w/ELEE HI/RFL	rlrb rfl	5	64	0.3	0.1	278	2,320
IN	Interior	1043	James Fallon-Elementary Sc	Office 28C	1	3L4' T8 32w/EL	trof parabolic	2	88	0.2	2L4' T8 28w/ELEE HI/RFL	rlrb rfl	2	64	0.1	0.0	111	2,320
IN	Interior	1044	James Fallon-Elementary Sc	Office Nurse	1	3L4' T8 U 1.5" /EL	trof parabolic	2	85	0.2	2L2' T8 15w/ELEE HI/RFL	rlrb RT8 kit	2	33	0.1	0.1	241	2,320
IN	Interior	1045	James Fallon-Elementary Sc	Office Nurse	1	3L4' T8 32w/EL	trof parabolic	3	88	0.3	2L4' T8 28w/ELEE HI/RFL	rlrb rfl	3	64	0.2	0.1	167	2,320
IN	Interior	1046	James Fallon-Elementary Sc	Office 26A	1	3L4' T8 32w/EL	trof parabolic	1	88	0.1	2L4' T8 28w/ELEE HI/RFL	rlrb rfl	1	64	0.1	0.0	56	2,320
IN	Interior	1047	James Fallon-Elementary Sc	Bath 26A	1	2L4' T8 32w/EL	wrap	1	60	0.1	1L4' T8 28w/ELEE HI/NEW	new wrap	1	33	0.0	0.0	90	3,320
IN	Interior	1048	James Fallon-Elementary Sc	Cafeteria Seating Area	1	3L4' T8 U 1.5" /EL	trof parabolic	10	85	0.9	2L2' T8 15w/ELEE HI/RFL	rlrb RT8 kit	10	33	0.3	0.5	1,414	2,720
IN	Interior	1049	James Fallon-Elementary Sc	Cafeteria Seating Area	1	2L2' F40 BIAX/EL	troffer indirect	18	72	1.3	2L2' T8 15w/ELEE HI/RFL	rlrb RT8 kit	18	33	0.6	0.7	1,909	2,720
IN	Interior	1050	James Fallon-Elementary Sc	Cafeteria Seating Area	1	2x18W COMPACT HARDV	can rec 9"	36	38	1.4	NO RETRO	no change needed		38	1.4			2,720
IN	Interior	1051	James Fallon-Elementary Sc	Kitchen Prep Area	1	2x18W COMPACT HARDV	can rec 9"	3	38	0.1	NO RETRO	no change needed		38	0.1			1,920
IN	Interior	1052	James Fallon-Elementary Sc	Kitchen Prep Area	1	3L4' T8 32w/EL	trof acr	5	88	0.4	3L4' T8 28w/ELEE LO	rlrb	5	63	0.3	0.1	240	1,920
IN	Interior	1053	James Fallon-Elementary Sc	Kitchen Grease Hood	1	100W INCANDESCENT	jar	1	100	0.1	23W COMPACT SI/29712/CF23	screw in	1	23	0.0	0.1	148	1,920
IN	Interior	1054	James Fallon-Elementary Sc	Storage Dry Goods	1	3L4' T8 32w/EL	trof acr	2	88	0.2	3L4' T8 28w/ELEE LO	rlrb	2	63	0.1	0.1	106	2,120
IN	Interior	1055	James Fallon-Elementary Sc	Closet Clean	1	2x18W COMPACT HARDV	can rec 9"	1	38	0.0	NO RETRO	no change needed		38	0.0			500
IN	Interior	1056	James Fallon-Elementary Sc	Lounge Staff	1	3L4' T8 32w/EL	trof parabolic	5	88	0.4	2L4' T8 28w/ELEE HI/RFL	rlrb rfl	5	64	0.3	0.1	302	2,520

In or Out	ECM	Line	Building Name	Location	Fl	Pre Fixture Description	Pre Fixture Style	Pre Qty	Pre Watts	Pre kW	Post Fixture Description	Post Fixture Style	Post Qty	Post Watts	Post kW	kW Saved	kWH Saved	Annual Hours
IN	Interior	1057	James Fallon-Elementary Sc	Lounge Staff	1	2x18W COMPACT HARDV	can rec 9"	1	38	0.0	NO RETRO	no change needed		38	0.0			2,520
IN	Interior	1058	James Fallon-Elementary Sc	Storage Server	1	2x18W COMPACT HARDV	can rec 9"	1	38	0.0	NO RETRO	no change needed		38	0.0			500
IN	Interior	1059	James Fallon-Elementary Sc	Office Custodian	1	2L4' T8 32w/EL	wrap	2	60	0.1	1L4' T8 28w/ELEE HI/NEW	new wrap	2	33	0.1	0.1	125	2,320
IN	Interior	1060	James Fallon-Elementary Sc	Classroom 15	1	3L4' T8 32w/EL	trof para dbl switc	15	88	1.3	2L4' T8 28w/ELEE HI/RFL	rlrb RT8 kit	15	64	1.0	0.4	907	2,520
IN	Interior	1061	James Fallon-Elementary Sc	Classroom 15	1	2L4' T8 U/EL	box acrylic	1	60	0.1	2L2' T8 15w/ELEE HI/RFL	rlrb RT8 kit	1	33	0.0	0.0	68	2,520
IN	Interior	1062	James Fallon-Elementary Sc	Classroom 15	1	2x18W COMPACT HARDV	can rec 9"	1	38	0.0	NO RETRO	no change needed		38	0.0			2,520
IN	Interior	1063	James Fallon-Elementary Sc	Hall By Baths	1	2L4' T8 U/EL	box acrylic	1	60	0.1	2L2' T8 15w/ELEE HI/RFL	rlrb rfl	1	33	0.0	0.0	98	3,620
IN	Interior	1064	James Fallon-Elementary Sc	Bath Unisex	1	60W INCANDESCENT	exhaust fan light	1	60	0.1	11W COMPACT SI/29708/CF11	screw in	1	11	0.0	0.0	163	3,320
IN	Interior	1065	James Fallon-Elementary Sc	Bath Unisex	1	60W INCANDESCENT	exhaust fan light	1	60	0.1	11W COMPACT SI/29708/CF11	screw in	1	11	0.0	0.0	163	3,320
IN	Interior	1066	James Fallon-Elementary Sc	Mechanical Boiler	1	2L4' T8 32w/EL	strip reflector	12	60	0.7	2L4' T8 28w/ELEE LO	rlrb	12	42	0.5	0.2	108	500
IN	Interior	1067	James Fallon-Elementary Sc	Classroom 14	1	3L4' T8 32w/EL	trof para dbl switc	15	88	1.3	2L4' T8 28w/ELEE HI/RFL	rlrb RT8 kit	15	64	1.0	0.4	907	2,520
IN	Interior	1068	James Fallon-Elementary Sc	Classroom 14	1	2x18W COMPACT HARDV	can rec 9"	1	38	0.0	NO RETRO	no change needed		38	0.0			2,520
IN	Interior	1069	James Fallon-Elementary Sc	Hall By Baths	1	2L4' T8 32w/EL	wrap	1	60	0.1	1L4' T8 28w/ELEE HI/NEW	new wrap	1	33	0.0	0.0	98	3,620
IN	Interior	1070	James Fallon-Elementary Sc	Bath Unisex	1	60W INCANDESCENT	exhaust fan light	1	60	0.1	11W COMPACT SI/29708/CF11	screw in	1	11	0.0	0.0	163	3,320
IN	Interior	1071	James Fallon-Elementary Sc	Bath Unisex	1	60W INCANDESCENT	exhaust fan light	1	60	0.1	11W COMPACT SI/29708/CF11	screw in	1	11	0.0	0.0	163	3,320
IN	Interior	1072	James Fallon-Elementary Sc	Storage 14	1	2L4' T8 32w/EL	wrap	1	60	0.1	1L4' T8 28w/ELEE HI/NEW	new wrap	1	33	0.0	0.0	14	500
IN	Interior	1073	James Fallon-Elementary Sc	Classroom 14	1	3L4' T8 32w/EL	trof para dbl switc	15	88	1.3	2L4' T8 28w/ELEE HI/RFL	rlrb RT8 kit	15	64	1.0	0.4	907	2,520
IN	Interior	1074	James Fallon-Elementary Sc	Classroom 14	1	2x18W COMPACT HARDV	can rec 9"	1	38	0.0	NO RETRO	no change needed		38	0.0			2,520
IN	Interior	1075	James Fallon-Elementary Sc	Hall 13 To Lobby	1	2L4' T8 32w/EL	troffer indirect	9	60	0.5	2L4' T8 28w/ELEE LO	rlrb	9	42	0.4	0.2	586	3,620
IN	Interior	1076	James Fallon-Elementary Sc	Hall 13 To Lobby	1	2L2' F40 BIAX/EL	troffer indirect	1	72	0.1	2L2' F40BIAX/EL28W	rlrb	1	63	0.1	0.0	33	3,620
IN	Interior	1077	James Fallon-Elementary Sc	Hall 13 To Lobby	1	2x18W COMPACT HARDV	can rec 9"	4	38	0.2	NO RETRO	no change needed		38	0.2			3,620
IN	Exterior	1078	James Fallon-Elementary Sc	Bldg Mt Fixture 1	ext	100W METAL HALIDE	can rec 9"	3	120	0.4	22 WATT LED/KIT	Spectrum Lighting can re	3	22	0.1	0.3	1,288	4,380
IN	Exterior	1079	James Fallon-Elementary Sc	Bldg Mt Fixture 2	ext	100W METAL HALIDE	decorative	1	120	0.1	50 WATT LED/NEW	Sylvania D6 posttop retr	1	50	0.1	0.1	307	4,380
IN	Exterior	1080	James Fallon-Elementary Sc	Bldg Mt Fixture 3	ext	32W COMPACT SCREWIN	can rec 9"	20	32	0.6	NO RETRO	no change needed		32	0.6			4,380
IN	Exterior	1081	James Fallon-Elementary Sc	Bldg Mt Fixture 4	ext	250W HI PRESSURE SOD	wallpack	14	295	4.1	133 WATT LED/NEW	new LED wallpack	14	133	1.9	2.3	9,934	4,380
IN	Interior	1082	Lafayette-Elementary Schoo	Classroom 23	1	3L4' T12 EE/EEMAG	trof acrylic dbl swi	12	110	1.3	2L4' T8 28w/ELEE HI/RFL	rlrb RT8 kit	12	64	0.8	0.6	1,391	2,520
IN	Interior	1083	Lafayette-Elementary Schoo	Classroom 24	1	3L4' T12 EE/EEMAG	trof acrylic dbl swi	12	110	1.3	2L4' T8 28w/ELEE HI/RFL	rlrb RT8 kit	12	64	0.8	0.6	1,391	2,520
IN	Interior	1084	Lafayette-Elementary Schoo	Bath Girls	1	3L4' T12 EE/EEMAG	trof acr	3	110	0.3	3L4' T8 28w/ELEE LO	rlrb	3	63	0.2	0.1	468	3,320
IN	Interior	1085	Lafayette-Elementary Schoo	Bath Boys	1	3L4' T12 EE/EEMAG	trof acr	3	110	0.3	3L4' T8 28w/ELEE LO	rlrb	3	63	0.2	0.1	468	3,320
IN	Interior	1086	Lafayette-Elementary Schoo	Classroom 20	1	4L4' T12 EE/EEMAG-8'	old wrap narrow	8	140	1.1	2L4' T8 28w/ELEE HI/NEW-8'	new wrap	8	64	0.5	0.6	1,532	2,520
IN	Interior	1087	Lafayette-Elementary Schoo	Classroom 20	1	2L4' T12 EE/EEMAG	old wrap narrow	4	70	0.3	1L4' T8 28w/ELEE HI/NEW	new wrap	4	33	0.1	0.1	373	2,520
IN	Interior	1088	Lafayette-Elementary Schoo	Bath 20	1	40W INCANDESCENT	square recessed	1	40	0.0	11W COMPACT SI/29708/CF11	screw in	1	11	0.0	0.0	96	3,320
IN	Interior	1089	Lafayette-Elementary Schoo	Classroom 22	1	4L4' T12 EE/EEMAG-8'	old wrap narrow	8	140	1.1	2L4' T8 28w/ELEE HI/NEW-8'	new wrap	8	64	0.5	0.6	1,532	2,520
IN	Interior	1090	Lafayette-Elementary Schoo	Classroom 22	1	2L4' T12 EE/EEMAG	old wrap narrow	4	70	0.3	1L4' T8 28w/ELEE HI/NEW	new wrap	4	33	0.1	0.1	373	2,520
IN	Interior	1091	Lafayette-Elementary Schoo	Bath 22	1	40W INCANDESCENT	square recessed	1	40	0.0	11W COMPACT SI/29708/CF11	screw in	1	11	0.0	0.0	96	3,320
IN	Interior	1092	Lafayette-Elementary Schoo	Classroom 21	1	4L4' T12 EE/EEMAG-8'	old wrap narrow	8	140	1.1	2L4' T8 28w/ELEE HI/NEW-8'	new wrap	8	64	0.5	0.6	1,532	2,520
IN	Interior	1093	Lafayette-Elementary Schoo	Classroom 21	1	2L4' T12 EE/EEMAG	old wrap narrow	4	70	0.3	1L4' T8 28w/ELEE HI/NEW	new wrap	4	33	0.1	0.1	373	2,520
IN	Interior	1094	Lafayette-Elementary Schoo	Bath 21	1	40W INCANDESCENT	square recessed	1	40	0.0	11W COMPACT SI/29708/CF11	screw in	1	11	0.0	0.0	96	3,320
IN	Interior	1095	Lafayette-Elementary Schoo	Classroom 19	1	4L4' T12 EE/EEMAG-8'	old wrap narrow	8	140	1.1	2L4' T8 28w/ELEE HI/NEW-8'	new wrap	8	64	0.5	0.6	1,532	2,520
IN	Interior	1096	Lafayette-Elementary Schoo	Classroom 19	1	2L4' T12 EE/EEMAG	old wrap narrow	4	70	0.3	1L4' T8 28w/ELEE HI/NEW	new wrap	4	33	0.1	0.1	373	2,520
IN	Interior	1097	Lafayette-Elementary Schoo	Bath 19	1	40W INCANDESCENT	square recessed	1	40	0.0	11W COMPACT SI/29708/CF11	screw in	1	11	0.0	0.0	96	3,320
IN	Interior	1098	Lafayette-Elementary Schoo	Gym Main	1	4L4' T12 EE/EEMAG	old wrap	40	140	5.6	2L4' T8 28w/ELEE HI/NEW	new wrap wide	40	64	2.6	3.0	8,877	2,920
IN	Interior	1099	Lafayette-Elementary Schoo	Library	1	3L4' T12 EE/EEMAG	box acrylic	9	110	1.0	2L4' T8 28w/ELEE HI/RFL	rlrb RT8 kit	9	64	0.6	0.4	1,043	2,520
IN	Interior	1100	Lafayette-Elementary Schoo	Storage Server	1	2L4' T12 EE/EEMAG	trof minicube	2	70	0.1	2L4' T8 28w/ELEE LO	rlrb	2	42	0.1	0.1	28	500
IN	Interior	1101	Lafayette-Elementary Schoo	Office Computer Lab	1	2L4' T12 EE/EEMAG	trof minicube	2	70	0.1	2L4' T8 28w/ELEE LO	rlrb	2	42	0.1	0.1	130	2,320
IN	Interior	1102	Lafayette-Elementary Schoo	Library	1	2L4' T12 EE/EEMAG	trof minicube	5	70	0.4	2L4' T8 28w/ELEE HI/RFL	rlrb RT8 kit	5	64	0.3	0.0	76	2,520
IN	Interior	1103	Lafayette-Elementary Schoo	Library	1	3L4' T12 EE/EEMAG	box acrylic	35	110	3.9	2L4' T8 28w/ELEE HI/RFL	rlrb RT8 kit	35	64	2.2	1.6	4,057	2,520
IN	Interior	1104	Lafayette-Elementary Schoo	Office Library	1	2L4' T12 EE/EEMAG	trof minicube	2	70	0.1	2L4' T8 28w/ELEE LO	rlrb	2	42	0.1	0.1	130	2,320

In or Out	ECM	Line	Building Name	Location	Fl	Pre Fixture Description	Pre Fixture Style	Pre Qty	Pre Watts	Pre kW	Post Fixture Description	Post Fixture Style	Post Qty	Post Watts	Post kW	kW Saved	kWH Saved	Annual Hours
IN	Interior	1105	Lafayette-Elementary Schoo	Storage Equipment	1	2L4' T12 EE/EEMAG	old wrap	1	70	0.1	1L4' T8 28w/ELEE HI/NEW	new wrap	1	33	0.0	0.0	19	500
IN	Interior	1106	Lafayette-Elementary Schoo	Bath Staff	1	2L4' T8 U/EL	trof acr	1	60	0.1	2L2' T8 15w/ELEE HI/RFL	rlrb rfl	1	33	0.0	0.0	90	3,320
IN	Interior	1107	Lafayette-Elementary Schoo	Bath Staff	1	1L2' T8 17w/EL	vanity	1	17	0.0	2L2' T8 15w/ELEE LO/NEW	new vanity	1	24	0.0	0.0	-23	3,320
IN	Interior	1108	Lafayette-Elementary Schoo	Hall 24 To Gym	1	3L4' T8 32w/EL	trof acr	13	88	1.1	3L4' T8 28w/ELEE LO	rlrb	13	63	0.8	0.3	1,177	3,620
IN	Interior	1109	Lafayette-Elementary Schoo	Hall 24 To Gym	1	2L4' T12 EE/EEMAG	wrap	1	70	0.1	1L4' T8 28w/ELEE HI/NEW	new wrap	1	33	0.0	0.0	134	3,620
IN	Interior	1110	Lafayette-Elementary Schoo	Hall 17 To 18	1	3L4' T12 EE/EEMAG	trof acr	6	110	0.7	3L4' T8 28w/ELEE LO	rlrb	6	63	0.4	0.3	1,021	3,620
IN	Interior	1111	Lafayette-Elementary Schoo	Classroom 18B	1	3L4' T12 EE/EEMAG	trof acrylic dbl swi	6	110	0.7	2L4' T8 28w/ELEE HI/RFL	rlrb RT8 kit	6	64	0.4	0.3	696	2,520
IN	Interior	1112	Lafayette-Elementary Schoo	Classroom 18A	1	3L4' T12 EE/EEMAG	trof acrylic dbl swi	6	110	0.7	2L4' T8 28w/ELEE HI/RFL	rlrb RT8 kit	6	64	0.4	0.3	696	2,520
IN	Interior	1113	Lafayette-Elementary Schoo	Classroom 17B	1	3L4' T12 EE/EEMAG	trof acrylic dbl swi	6	110	0.7	2L4' T8 28w/ELEE HI/RFL	rlrb RT8 kit	6	64	0.4	0.3	696	2,520
IN	Interior	1114	Lafayette-Elementary Schoo	Classroom 17A	1	3L4' T12 EE/EEMAG	trof acrylic dbl swi	6	110	0.7	2L4' T8 28w/ELEE HI/RFL	rlrb RT8 kit	6	64	0.4	0.3	696	2,520
IN	Interior	1115	Lafayette-Elementary Schoo	Hall Gym To Main Office	1	3L4' T8 32w/EL	trof acr	3	88	0.3	3L4' T8 28w/ELEE LO	rlrb	3	63	0.2	0.1	272	3,620
IN	Interior	1116	Lafayette-Elementary Schoo	Hall Gym To Main Office	1	3L4' T8 32w/EL	trof acr	3	88	0.3	3L4' T8 28w/ELEE LO	rlrb	3	63	0.2	0.1	272	3,620
IN	Interior	1117	Lafayette-Elementary Schoo	Mechanical Air Handler	1	60W INCANDESCENT	old jar	1	60	0.1	13 WATT LED/NEW	new LED jar exterior	1	13	0.0	0.0	24	500
IN	Interior	1118	Lafayette-Elementary Schoo	Office Nurse	1	3L4' T8 32w/EL	trof acr	1	88	0.1	3L4' T8 28w/ELEE LO	rlrb	1	63	0.1	0.0	58	2,320
IN	Interior	1119	Lafayette-Elementary Schoo	Office Nurse	1	32W CIRCLELINE HARDW	drum	1	34	0.0	2L2' T8 15w/ELEE LO/NEW	new wrap	1	24	0.0	0.0	23	2,320
IN	Interior	1120	Lafayette-Elementary Schoo	Bath Nurse	1	2x60W INCANDESCENTS	old drum	1	120	0.1	2L2' T8 15w/ELEE LO/NEW	new wrap	1	24	0.0	0.1	319	3,320
IN	Interior	1121	Lafayette-Elementary Schoo	Office Open Main	1	3L4' T8 32w/EL	trof acr	4	88	0.4	3L4' T8 28w/ELEE LO	rlrb	4	63	0.3	0.1	272	2,720
IN	Interior	1122	Lafayette-Elementary Schoo	Closet Supplies	1	60W INCANDESCENT	keyless	1	60	0.1	23W COMPACT SI/29712/CF23	screw in	1	23	0.0	0.0	19	500
IN	Interior	1123	Lafayette-Elementary Schoo	Office Principal	1	4L4' T8 32w/EL-8'	wrap	2	112	0.2	2L4' T8 28w/ELEE HI/NEW-8'	new wrap	2	64	0.1	0.1	223	2,320
IN	Interior	1124	Lafayette-Elementary Schoo	Office Social Worker	1	4L4' T12 EE/EEMAG-8'	wrap	2	140	0.3	2L4' T8 28w/ELEE HI/NEW-8'	new wrap	2	64	0.1	0.2	353	2,320
IN	Interior	1125	Lafayette-Elementary Schoo	Classroom 15	1	4L4' T12 EE/EEMAG-8'	wrap	11	140	1.5	2L4' T8 28w/ELEE HI/NEW-8'	new wrap	11	64	0.7	0.8	2,107	2,520
IN	Interior	1126	Lafayette-Elementary Schoo	Closet 15	1	100W INCANDESCENT	keyless	1	100	0.1	23W COMPACT SI/29712/CF23	screw in	1	23	0.0	0.1	39	500
IN	Interior	1127	Lafayette-Elementary Schoo	Bath 14/15	1	2L4' T12 EE/EEMAG	wrap	2	70	0.1	1L4' T8 28w/ELEE HI/NEW	new wrap	2	33	0.1	0.1	246	3,320
IN	Interior	1128	Lafayette-Elementary Schoo	Classroom 14	1	4L4' T12 EE/EEMAG-8'	wrap	11	140	1.5	2L4' T8 28w/ELEE HI/NEW-8'	new wrap	11	64	0.7	0.8	2,107	2,520
IN	Interior	1129	Lafayette-Elementary Schoo	Hall 14 To 10	1	3L4' T8 32w/EL	box acrylic	8	88	0.7	3L4' T8 28w/ELEE LO	rlrb	8	63	0.5	0.2	724	3,620
IN	Interior	1130	Lafayette-Elementary Schoo	Classroom 13	1	4L4' T12 EE/EEMAG-8'	wrap	3	140	0.4	2L4' T8 28w/ELEE HI/NEW-8'	new wrap	3	64	0.2	0.2	575	2,520
IN	Interior	1131	Lafayette-Elementary Schoo	Classroom 13	1	4L4' T12 EE/EEMAG-8'	wrap	6	140	0.8	2L4' T8 28w/ELEE HI/NEW-8'	new wrap	6	64	0.4	0.5	1,149	2,520
IN	Interior	1132	Lafayette-Elementary Schoo	Classroom 12	1	4L4' T12 EE/EEMAG-8'	wrap	3	140	0.4	2L4' T8 28w/ELEE HI/NEW-8'	new wrap	3	64	0.2	0.2	575	2,520
IN	Interior	1133	Lafayette-Elementary Schoo	Classroom 12	1	4L4' T12 EE/EEMAG-8'	wrap	6	140	0.8	2L4' T8 28w/ELEE HI/NEW-8'	new wrap	6	64	0.4	0.5	1,149	2,520
IN	Interior	1134	Lafayette-Elementary Schoo	Classroom 11	1	4L4' T12 EE/EEMAG-8'	wrap	3	140	0.4	2L4' T8 28w/ELEE HI/NEW-8'	new wrap	3	64	0.2	0.2	575	2,520
IN	Interior	1135	Lafayette-Elementary Schoo	Classroom 11	1	4L4' T12 EE/EEMAG-8'	wrap	6	140	0.8	2L4' T8 28w/ELEE HI/NEW-8'	new wrap	6	64	0.4	0.5	1,149	2,520
IN	Interior	1136	Lafayette-Elementary Schoo	Classroom 10	1	4L4' T12 EE/EEMAG-8'	wrap	3	140	0.4	2L4' T8 28w/ELEE HI/NEW-8'	new wrap	3	64	0.2	0.2	575	2,520
IN	Interior	1137	Lafayette-Elementary Schoo	Classroom 10	1	4L4' T12 EE/EEMAG-8'	wrap	6	140	0.8	2L4' T8 28w/ELEE HI/NEW-8'	new wrap	6	64	0.4	0.5	1,149	2,520
IN	Interior	1138	Lafayette-Elementary Schoo	Classroom 9	1	4L4' T12 EE/EEMAG-8'	wrap	3	140	0.4	2L4' T8 28w/ELEE HI/NEW-8'	new wrap	3	64	0.2	0.2	575	2,520
IN	Interior	1139	Lafayette-Elementary Schoo	Classroom 9	1	4L4' T12 EE/EEMAG-8'	wrap	6	140	0.8	2L4' T8 28w/ELEE HI/NEW-8'	new wrap	6	64	0.4	0.5	1,149	2,520
IN	Interior	1140	Lafayette-Elementary Schoo	Closet Clean	1	18W COMPACT HARDWI	keyless	1	20	0.0	NO RETRO	no change needed		20	0.0			500
IN	Interior	1141	Lafayette-Elementary Schoo	Storage Paper	1	2L4' T12 EE/EEMAG	wrap	2	70	0.1	1L4' T8 28w/ELEE HI/NEW	new wrap	2	33	0.1	0.1	157	2,120
IN	Interior	1142	Lafayette-Elementary Schoo	Kitchen	1	2L4' T8 32w/EL	wrap	1	60	0.1	2L4' T8 28w/ELEE LO/NEW	new wrap	1	42	0.0	0.0	35	1,920
IN	Interior	1143	Lafayette-Elementary Schoo	Office Copy	1	2L4' T8 32w/EL	wrap	1	60	0.1	1L4' T8 28w/ELEE HI/NEW	new wrap	1	33	0.0	0.0	63	2,320
IN	Interior	1144	Lafayette-Elementary Schoo	Lounge Staff	1	2L4' T12 EE/EEMAG	wrap	2	70	0.1	1L4' T8 28w/ELEE HI/NEW	new wrap	2	33	0.1	0.1	186	2,520
IN	Interior	1145	Lafayette-Elementary Schoo	Lounge Staff	1	13W COMPACT HARDWI	keyless	1	15	0.0	NO RETRO	no change needed		15	0.0			2,520
IN	Interior	1146	Lafayette-Elementary Schoo	Bath Staff	1	2L4' T12 EE/EEMAG	wrap	1	70	0.1	1L4' T8 28w/ELEE HI/NEW	new wrap	1	33	0.0	0.0	123	3,320
IN	Interior	1147	Lafayette-Elementary Schoo	Bath Girls	1	2L4' T8 32w/EL	wrap	1	60	0.1	1L4' T8 28w/ELEE HI/NEW	new wrap	1	33	0.0	0.0	90	3,320
IN	Interior	1148	Lafayette-Elementary Schoo	Bath Girls	1	4L4' T8 32w/EL-8'	wrap	1	112	0.1	2L4' T8 28w/ELEE HI/NEW-8'	new wrap	1	64	0.1	0.0	159	3,320
IN	Interior	1149	Lafayette-Elementary Schoo	Bath Staff	1	2L4' T8 32w/EL	wrap	1	60	0.1	1L4' T8 28w/ELEE HI/NEW	new wrap	1	33	0.0	0.0	90	3,320
IN	Interior	1150	Lafayette-Elementary Schoo	Bath Boys	1	3L4' T8 32w/EL	trof acr	1	88	0.1	3L4' T8 28w/ELEE LO	rlrb	1	63	0.1	0.0	83	3,320
IN	Interior	1151	Lafayette-Elementary Schoo	Bath Boys	1	2L4' T8 U/EL	trof acr	1	60	0.1	2L2' T8 15w/ELEE HI/RFL	rlrb rfl	1	33	0.0	0.0	90	3,320
IN	Interior	1152	Lafayette-Elementary Schoo	Storage By Boiler	1	2x13W COMPACT HARDW	drum	2	30	0.1	NO RETRO	no change needed		30	0.1			2,120

In or Out	ECM	Line	Building Name	Location	Fl	Pre Fixture Description	Pre Fixture Style	Pre Qty	Pre Watts	Pre kW	Post Fixture Description	Post Fixture Style	Post Qty	Post Watts	Post kW	kW Saved	kWH Saved	Annual Hours
IN	Interior	1153	Lafayette-Elementary Schoo	Mechanical Boiler	1	2L4' T12 EE/EEMAG	old wrap	5	70	0.4	1L4' T8 28w/ELEE HI/NEW	new wrap	5	33	0.2	0.2	93	500
IN	Interior	1154	Lafayette-Elementary Schoo	Mechanical Boiler	1	60W INCANDESCENT	keyless	2	60	0.1	23W COMPACT SI/29712/CF23	screw in	2	23	0.0	0.1	37	500
IN	Interior	1155	Lafayette-Elementary Schoo	Kitchen Prep Area	1	2L4' T12 EE/EEMAG	old wrap	10	70	0.7	2L4' T8 28w/ELEE LO/NEW	new wrap	10	42	0.4	0.3	538	1,920
IN	Interior	1156	Lafayette-Elementary Schoo	Kitchen Grease Hood	1	100W INCANDESCENT	jar	2	100	0.2	23W COMPACT SI/29712/CF23	screw in	2	23	0.0	0.2	296	1,920
IN	Interior	1157	Lafayette-Elementary Schoo	Hall 15 To 9	1	3L4' T8 32w/EL	box acrylic	11	88	1.0	3L4' T8 28w/ELEE LO	rlrb	11	63	0.7	0.3	996	3,620
IN	Interior	1158	Lafayette-Elementary Schoo	Cafeteria Seating Area	1	4L4' T12 EE/EEMAG-8'	wrap	14	140	2.0	2L4' T8 28w/ELEE HI/NEW-8'	new wrap	14	64	0.9	1.1	2,894	2,720
IN	Interior	1159	Lafayette-Elementary Schoo	Cafeteria Seating Area	1	4L4' T12 EE/EEMAG-8'	wrap	7	140	1.0	2L4' T8 28w/ELEE HI/NEW-8'	new wrap	7	64	0.4	0.5	1,447	2,720
IN	Interior	1160	Lafayette-Elementary Schoo	Hall 9 To Main Lobby	1	3L4' T8 32w/EL	box acrylic	9	88	0.8	3L4' T8 28w/ELEE LO	rlrb	9	63	0.6	0.2	815	3,620
IN	Interior	1161	Lafayette-Elementary Schoo	Hall 9 To Main Lobby	1	3L2' T8 17w/EL	box acrylic	1	47	0.0	3L2' T8 15w/ELEE LO	rlrb	1	39	0.0	0.0	29	3,620
IN	Interior	1162	Lafayette-Elementary Schoo	Bath Girls	1	2L4' T12 EE/EEMAG	wrap	2	70	0.1	1L4' T8 28w/ELEE HI/NEW	new wrap	2	33	0.1	0.1	246	3,320
IN	Interior	1163	Lafayette-Elementary Schoo	Bath Boys	1	2L4' T12 EE/EEMAG	wrap	2	70	0.1	1L4' T8 28w/ELEE HI/NEW	new wrap	2	33	0.1	0.1	246	3,320
IN	Interior	1164	Lafayette-Elementary Schoo	Classroom 8	1	4L4' T12 EE/EEMAG-8'	wrap	3	140	0.4	2L4' T8 28w/ELEE HI/NEW-8'	new wrap	3	64	0.2	0.2	575	2,520
IN	Interior	1165	Lafayette-Elementary Schoo	Classroom 8	1	4L4' T12 EE/EEMAG-8'	wrap	6	140	0.8	2L4' T8 28w/ELEE HI/NEW-8'	new wrap	6	64	0.4	0.5	1,149	2,520
IN	Interior	1166	Lafayette-Elementary Schoo	Classroom 7	1	4L4' T12 EE/EEMAG-8'	wrap	3	140	0.4	2L4' T8 28w/ELEE HI/NEW-8'	new wrap	3	64	0.2	0.2	575	2,520
IN	Interior	1167	Lafayette-Elementary Schoo	Classroom 7	1	4L4' T12 EE/EEMAG-8'	wrap	6	140	0.8	2L4' T8 28w/ELEE HI/NEW-8'	new wrap	6	64	0.4	0.5	1,149	2,520
IN	Interior	1168	Lafayette-Elementary Schoo	Classroom 6	1	4L4' T12 EE/EEMAG-8'	wrap	3	140	0.4	2L4' T8 28w/ELEE HI/NEW-8'	new wrap	3	64	0.2	0.2	575	2,520
IN	Interior	1169	Lafayette-Elementary Schoo	Classroom 6	1	4L4' T12 EE/EEMAG-8'	wrap	6	140	0.8	2L4' T8 28w/ELEE HI/NEW-8'	new wrap	6	64	0.4	0.5	1,149	2,520
IN	Interior	1170	Lafayette-Elementary Schoo	Classroom 5	1	4L4' T12 EE/EEMAG-8'	wrap	3	140	0.4	2L4' T8 28w/ELEE HI/NEW-8'	new wrap	3	64	0.2	0.2	575	2,520
IN	Interior	1171	Lafayette-Elementary Schoo	Classroom 5	1	4L4' T12 EE/EEMAG-8'	wrap	6	140	0.8	2L4' T8 28w/ELEE HI/NEW-8'	new wrap	6	64	0.4	0.5	1,149	2,520
IN	Interior	1172	Lafayette-Elementary Schoo	Classroom 4	1	4L4' T12 EE/EEMAG-8'	wrap	3	140	0.4	2L4' T8 28w/ELEE HI/NEW-8'	new wrap	3	64	0.2	0.2	575	2,520
IN	Interior	1173	Lafayette-Elementary Schoo	Classroom 4	1	4L4' T12 EE/EEMAG-8'	wrap	6	140	0.8	2L4' T8 28w/ELEE HI/NEW-8'	new wrap	6	64	0.4	0.5	1,149	2,520
IN	Interior	1174	Lafayette-Elementary Schoo	Classroom 3	1	4L4' T12 EE/EEMAG-8'	wrap	3	140	0.4	2L4' T8 28w/ELEE HI/NEW-8'	new wrap	3	64	0.2	0.2	575	2,520
IN	Interior	1175	Lafayette-Elementary Schoo	Classroom 3	1	4L4' T12 EE/EEMAG-8'	wrap	6	140	0.8	2L4' T8 28w/ELEE HI/NEW-8'	new wrap	6	64	0.4	0.5	1,149	2,520
IN	Interior	1176	Lafayette-Elementary Schoo	Classroom 2	1	4L4' T12 EE/EEMAG-8'	wrap	3	140	0.4	2L4' T8 28w/ELEE HI/NEW-8'	new wrap	3	64	0.2	0.2	575	2,520
IN	Interior	1177	Lafayette-Elementary Schoo	Classroom 2	1	4L4' T12 EE/EEMAG-8'	wrap	6	140	0.8	2L4' T8 28w/ELEE HI/NEW-8'	new wrap	6	64	0.4	0.5	1,149	2,520
IN	Interior	1178	Lafayette-Elementary Schoo	Classroom 1	1	4L4' T12 EE/EEMAG-8'	wrap	3	140	0.4	2L4' T8 28w/ELEE HI/NEW-8'	new wrap	3	64	0.2	0.2	575	2,520
IN	Interior	1179	Lafayette-Elementary Schoo	Classroom 1	1	4L4' T12 EE/EEMAG-8'	wrap	6	140	0.8	2L4' T8 28w/ELEE HI/NEW-8'	new wrap	6	64	0.4	0.5	1,149	2,520
IN	Interior	1180	Lafayette-Elementary Schoo	Hall 2 To 7	1	3L4' T8 32w/EL	box acrylic	15	88	1.3	3L4' T8 28w/ELEE LO	rlrb	15	63	0.9	0.4	1,358	3,620
IN	Exterior	1181	Lafayette-Elementary Schoo	Bldg Mt Fixture 1	ext	50W HI PRESSURE SODI	canopy	7	65	0.5	26 WATT LED/NEW	new LED exterior area li	7	26	0.2	0.3	1,196	4,380
IN	Exterior	1182	Lafayette-Elementary Schoo	Bldg Mt Fixture 2	ext	150W HI PRESSURE SOD	wallpack	1	190	0.2	70 WATT LED/NEW	new LED wallpack	1	70	0.1	0.1	526	4,380
IN	Exterior	1183	Lafayette-Elementary Schoo	Bldg Mt Fixture 3	ext	72W COMPACT SCREWIN	wallpack	1	72	0.1	26 WATT LED/NEW	new LED wallpack	1	26	0.0	0.0	201	4,380
IN	Exterior	1184	Lafayette-Elementary Schoo	Bldg Mt Fixture 4	ext	3 WATT LED	wallpack	1	3	0.0	NO RETRO	no change needed		3	0.0			4,380
IN	Exterior	1185	Lafayette-Elementary Schoo	Bldg Mt Fixture 5	ext	50W HI PRESSURE SODI	wallpack	1	65	0.1	26 WATT LED/NEW	new LED wallpack	1	26	0.0	0.0	171	4,380
IN	Exterior	1186	Lafayette-Elementary Schoo	Bldg Mt Fixture 6	ext	3 WATT LED	flood	1	3	0.0	NO RETRO	no change needed		3	0.0			4,380
IN	Exterior	1187	Lafayette-Elementary Schoo	Bldg Mt Fixture 7	ext	250W HI PRESSURE SOD	wallpack	7	295	2.1	133 WATT LED/NEW	new LED wallpack	7	133	0.9	1.1	4,967	4,380
IN	Exterior	1188	Lafayette-Elementary Schoo	Parking Lot Fixture 8	ext	250W METAL HALIDE	flood	2	295	0.6	133 WATT LED/NEW	new LED flood	2	133	0.3	0.3	1,419	4,380
IN	Interior	1189	John F. Kennedy-Elementary	Hall 2Nd Floor	2	3L4' T12 EE/EEMAG	trof acr	3	110	0.3	3L4' T8 28w/ELEE LO	rlrb	3	63	0.2	0.1	510	3,620
IN	Interior	1190	John F. Kennedy-Elementary	Hall 2Nd Floor	2	2L4' T12 EE/EEMAG	wrap	15	70	1.1	1L4' T8 28w/ELEE HI/NEW	new wrap	15	33	0.5	0.6	2,009	3,620
IN	Interior	1191	John F. Kennedy-Elementary	Bath Men	2	2L4' T8 U/EL	trof acr	6	60	0.4	2L2' T8 15w/ELEE HI/RFL	rlrb rfl	6	33	0.2	0.2	538	3,320
IN	Interior	1192	John F. Kennedy-Elementary	Bath Staff	2	2L4' T8 U/EL	trof acr	2	60	0.1	2L2' T8 15w/ELEE HI/RFL	rlrb rfl	2	33	0.1	0.1	179	3,320
IN	Interior	1193	John F. Kennedy-Elementary	Closet Clean	2	3x13W COMPACT HARDV	drum	1	45	0.0	NO RETRO	no change needed		45	0.0			500
IN	Interior	1194	John F. Kennedy-Elementary	Bath Girls	2	2L4' T8 U/EL	trof acr	6	60	0.4	2L2' T8 15w/ELEE HI/RFL	rlrb rfl	6	33	0.2	0.2	538	3,320
IN	Interior	1195	John F. Kennedy-Elementary	Bath Staff	2	2L4' T8 U/EL	trof acr	2	60	0.1	2L2' T8 15w/ELEE HI/RFL	rlrb rfl	2	33	0.1	0.1	179	3,320
IN	Interior	1196	John F. Kennedy-Elementary	Classroom 12	2	4L4' T12 EE/EEMAG-8'	old wrap	3	140	0.4	2L4' T8 28w/ELEE HI/NEW-8'	new wrap	3	64	0.2	0.2	575	2,520
IN	Interior	1197	John F. Kennedy-Elementary	Classroom 12	2	4L4' T12 EE/EEMAG-8'	old wrap	6	140	0.8	2L4' T8 28w/ELEE HI/NEW-8'	new wrap	6	64	0.4	0.5	1,149	2,520
IN	Interior	1198	John F. Kennedy-Elementary	Classroom 13	2	4L4' T12 EE/EEMAG-8'	old wrap	3	140	0.4	2L4' T8 28w/ELEE HI/NEW-8'	new wrap	3	64	0.2	0.2	575	2,520
IN	Interior	1199	John F. Kennedy-Elementary	Classroom 13	2	4L4' T12 EE/EEMAG-8'	old wrap	6	140	0.8	2L4' T8 28w/ELEE HI/NEW-8'	new wrap	6	64	0.4	0.5	1,149	2,520
IN	Interior	1200	John F. Kennedy-Elementary	Classroom 14	2	4L4' T12 EE/EEMAG-8'	old wrap	3	140	0.4	2L4' T8 28w/ELEE HI/NEW-8'	new wrap	3	64	0.2	0.2	575	2,520

In or Out	ECM	Line	Building Name	Location	Fl	Pre Fixture Description	Pre Fixture Style	Pre Qty	Pre Watts	Pre kW	Post Fixture Description	Post Fixture Style	Post Qty	Post Watts	Post kW	kW Saved	kWH Saved	Annual Hours
IN	Interior	1201	John F. Kennedy-Elementary	Classroom 14	2	4L4' T12 EE/EEMAG-8'	old wrap	6	140	0.8	2L4' T8 28w/ELEE HI/NEW-8'	new wrap	6	64	0.4	0.5	1,149	2,520
IN	Interior	1202	John F. Kennedy-Elementary	Classroom 15	2	4L4' T12 EE/EEMAG-8'	old wrap	3	140	0.4	2L4' T8 28w/ELEE HI/NEW-8'	new wrap	3	64	0.2	0.2	575	2,520
IN	Interior	1203	John F. Kennedy-Elementary	Classroom 15	2	4L4' T12 EE/EEMAG-8'	old wrap	6	140	0.8	2L4' T8 28w/ELEE HI/NEW-8'	new wrap	6	64	0.4	0.5	1,149	2,520
IN	Interior	1204	John F. Kennedy-Elementary	Classroom 16	2	4L4' T12 EE/EEMAG-8'	old wrap	3	140	0.4	2L4' T8 28w/ELEE HI/NEW-8'	new wrap	3	64	0.2	0.2	575	2,520
IN	Interior	1205	John F. Kennedy-Elementary	Classroom 16	2	4L4' T12 EE/EEMAG-8'	old wrap	6	140	0.8	2L4' T8 28w/ELEE HI/NEW-8'	new wrap	6	64	0.4	0.5	1,149	2,520
IN	Interior	1206	John F. Kennedy-Elementary	Classroom 17	2	4L4' T12 EE/EEMAG-8'	old wrap	3	140	0.4	2L4' T8 28w/ELEE HI/NEW-8'	new wrap	3	64	0.2	0.2	575	2,520
IN	Interior	1207	John F. Kennedy-Elementary	Classroom 17	2	4L4' T12 EE/EEMAG-8'	old wrap	6	140	0.8	2L4' T8 28w/ELEE HI/NEW-8'	new wrap	6	64	0.4	0.5	1,149	2,520
IN	Interior	1208	John F. Kennedy-Elementary	Classroom 18	2	4L4' T12 EE/EEMAG-8'	old wrap	3	140	0.4	2L4' T8 28w/ELEE HI/NEW-8'	new wrap	3	64	0.2	0.2	575	2,520
IN	Interior	1209	John F. Kennedy-Elementary	Classroom 18	2	4L4' T12 EE/EEMAG-8'	old wrap	6	140	0.8	2L4' T8 28w/ELEE HI/NEW-8'	new wrap	6	64	0.4	0.5	1,149	2,520
IN	Interior	1210	John F. Kennedy-Elementary	Classroom 19	2	4L4' T12 EE/EEMAG-8'	old wrap	3	140	0.4	2L4' T8 28w/ELEE HI/NEW-8'	new wrap	3	64	0.2	0.2	575	2,520
IN	Interior	1211	John F. Kennedy-Elementary	Classroom 19	2	4L4' T12 EE/EEMAG-8'	old wrap	6	140	0.8	2L4' T8 28w/ELEE HI/NEW-8'	new wrap	6	64	0.4	0.5	1,149	2,520
IN	Interior	1212	John F. Kennedy-Elementary	Classroom 20	2	4L4' T12 EE/EEMAG-8'	old wrap	3	140	0.4	2L4' T8 28w/ELEE HI/NEW-8'	new wrap	3	64	0.2	0.2	575	2,520
IN	Interior	1213	John F. Kennedy-Elementary	Classroom 20	2	4L4' T12 EE/EEMAG-8'	old wrap	6	140	0.8	2L4' T8 28w/ELEE HI/NEW-8'	new wrap	6	64	0.4	0.5	1,149	2,520
IN	Interior	1214	John F. Kennedy-Elementary	Classroom 21	2	4L4' T12 EE/EEMAG-8'	old wrap	3	140	0.4	2L4' T8 28w/ELEE HI/NEW-8'	new wrap	3	64	0.2	0.2	575	2,520
IN	Interior	1215	John F. Kennedy-Elementary	Classroom 21	2	4L4' T12 EE/EEMAG-8'	old wrap	6	140	0.8	2L4' T8 28w/ELEE HI/NEW-8'	new wrap	6	64	0.4	0.5	1,149	2,520
IN	Interior	1216	John F. Kennedy-Elementary	Classroom 22	2	4L4' T12 EE/EEMAG-8'	old wrap	3	140	0.4	2L4' T8 28w/ELEE HI/NEW-8'	new wrap	3	64	0.2	0.2	575	2,520
IN	Interior	1217	John F. Kennedy-Elementary	Classroom 22	2	4L4' T12 EE/EEMAG-8'	old wrap	6	140	0.8	2L4' T8 28w/ELEE HI/NEW-8'	new wrap	6	64	0.4	0.5	1,149	2,520
IN	Interior	1218	John F. Kennedy-Elementary	Classroom 23	2	4L4' T12 EE/EEMAG-8'	old wrap	3	140	0.4	2L4' T8 28w/ELEE HI/NEW-8'	new wrap	3	64	0.2	0.2	575	2,520
IN	Interior	1219	John F. Kennedy-Elementary	Classroom 23	2	4L4' T12 EE/EEMAG-8'	old wrap	6	140	0.8	2L4' T8 28w/ELEE HI/NEW-8'	new wrap	6	64	0.4	0.5	1,149	2,520
IN	Interior	1220	John F. Kennedy-Elementary	Stair 2	s	3x13W COMPACT HARDV	drum	3	45	0.1	NO RETRO	no change needed		45	0.1			3,620
IN	Interior	1221	John F. Kennedy-Elementary	Stair 2	s	2L4' T12 EE/EEMAG	old wrap	2	70	0.1	1L4' T8 28w/ELEE HI/NEW	new wrap	2	33	0.1	0.1	268	3,620
IN	Interior	1222	John F. Kennedy-Elementary	Stair 1	s	3x13W COMPACT HARDV	drum	3	45	0.1	NO RETRO	no change needed		45	0.1			3,620
IN	Interior	1223	John F. Kennedy-Elementary	Stair 1	s	2L4' T12 EE/EEMAG	old wrap	2	70	0.1	1L4' T8 28w/ELEE HI/NEW	new wrap	2	33	0.1	0.1	268	3,620
IN	Interior	1224	John F. Kennedy-Elementary	Classroom 102B	1	3L4' T12 EE/EEMAG	trof acrylic dbl swi	6	110	0.7	2L4' T8 28w/ELEE HI/RFL	rlrb RT8 kit	6	64	0.4	0.3	696	2,520
IN	Interior	1225	John F. Kennedy-Elementary	Classroom 102A	1	3L4' T12 EE/EEMAG	trof acrylic dbl swi	6	110	0.7	2L4' T8 28w/ELEE HI/RFL	rlrb RT8 kit	6	64	0.4	0.3	696	2,520
IN	Interior	1226	John F. Kennedy-Elementary	Classroom 101B	1	3L4' T12 EE/EEMAG	trof acrylic dbl swi	6	110	0.7	2L4' T8 28w/ELEE HI/RFL	rlrb RT8 kit	6	64	0.4	0.3	696	2,520
IN	Interior	1227	John F. Kennedy-Elementary	Classroom 101A	1	3L4' T12 EE/EEMAG	trof acrylic dbl swi	6	110	0.7	2L4' T8 28w/ELEE HI/RFL	rlrb RT8 kit	6	64	0.4	0.3	696	2,520
IN	Interior	1228	John F. Kennedy-Elementary	Library	1	2x18W COMPACT HARDV	can rec 9"	18	38	0.7	NO RETRO	no change needed		38	0.7			2,520
IN	Interior	1229	John F. Kennedy-Elementary	Library	1	2L4' T12 U EE/EEMAG	trof minicube	24	70	1.7	2L2' T8 15w/ELEE HI/RFL	rlrb RT8 kit	24	33	0.8	0.9	2,238	2,520
IN	Interior	1230	John F. Kennedy-Elementary	Library	1	23W COMPACT HARDWI	dome	17	24	0.4	NO RETRO	no change needed		24	0.4			2,520
IN	Interior	1231	John F. Kennedy-Elementary	Storage Server	1	3L4' T12 EE/EEMAG	trof acr	1	110	0.1	3L4' T8 28w/ELEE LO	rlrb	1	63	0.1	0.0	24	500
IN	Interior	1232	John F. Kennedy-Elementary	Office Library	1	3L4' T12 EE/EEMAG	trof acr	3	110	0.3	3L4' T8 28w/ELEE LO	rlrb	3	63	0.2	0.1	327	2,320
IN	Interior	1233	John F. Kennedy-Elementary	Classroom 100	1	3L4' T12 EE/EEMAG	trof acrylic dbl swi	15	110	1.7	2L4' T8 28w/ELEE HI/RFL	rlrb RT8 kit	15	64	1.0	0.7	1,739	2,520
IN	Interior	1234	John F. Kennedy-Elementary	Hall C102B To 100	1	3L4' T12 EE/EEMAG	trof acr	11	110	1.2	3L4' T8 28w/ELEE LO	rlrb	11	63	0.7	0.5	1,872	3,620
IN	Interior	1235	John F. Kennedy-Elementary	Classroom 10	1	4L4' T12 EE/EEMAG-8'	old wrap	3	140	0.4	2L4' T8 28w/ELEE HI/NEW-8'	new wrap	3	64	0.2	0.2	575	2,520
IN	Interior	1236	John F. Kennedy-Elementary	Classroom 10	1	4L4' T12 EE/EEMAG-8'	old wrap	6	140	0.8	2L4' T8 28w/ELEE HI/NEW-8'	new wrap	6	64	0.4	0.5	1,149	2,520
IN	Interior	1237	John F. Kennedy-Elementary	Bath 10	1	2x40W INCANDESCENTS	old drum	1	80	0.1	2L2' T8 15w/ELEE LO/NEW	new wrap	1	24	0.0	0.1	186	3,320
IN	Interior	1238	John F. Kennedy-Elementary	Classroom 11	1	4L4' T12 EE/EEMAG-8'	old wrap	3	140	0.4	2L4' T8 28w/ELEE HI/NEW-8'	new wrap	3	64	0.2	0.2	575	2,520
IN	Interior	1239	John F. Kennedy-Elementary	Classroom 11	1	4L4' T12 EE/EEMAG-8'	old wrap	6	140	0.8	2L4' T8 28w/ELEE HI/NEW-8'	new wrap	6	64	0.4	0.5	1,149	2,520
IN	Interior	1240	John F. Kennedy-Elementary	Bath 11	1	2x40W INCANDESCENTS	old drum	1	80	0.1	2L2' T8 15w/ELEE LO/NEW	new wrap	1	24	0.0	0.1	186	3,320
IN	Interior	1241	John F. Kennedy-Elementary	Classroom 9	1	4L4' T12 EE/EEMAG-8'	old wrap	3	140	0.4	2L4' T8 28w/ELEE HI/NEW-8'	new wrap	3	64	0.2	0.2	575	2,520
IN	Interior	1242	John F. Kennedy-Elementary	Classroom 9	1	4L4' T12 EE/EEMAG-8'	old wrap	6	140	0.8	2L4' T8 28w/ELEE HI/NEW-8'	new wrap	6	64	0.4	0.5	1,149	2,520
IN	Interior	1243	John F. Kennedy-Elementary	Bath 9	1	2x40W INCANDESCENTS	old drum	1	80	0.1	2L2' T8 15w/ELEE LO/NEW	new wrap	1	24	0.0	0.1	186	3,320
IN	Interior	1244	John F. Kennedy-Elementary	Classroom 8	1	4L4' T12 EE/EEMAG-8'	old wrap	3	140	0.4	2L4' T8 28w/ELEE HI/NEW-8'	new wrap	3	64	0.2	0.2	575	2,520
IN	Interior	1245	John F. Kennedy-Elementary	Classroom 8	1	4L4' T12 EE/EEMAG-8'	old wrap	6	140	0.8	2L4' T8 28w/ELEE HI/NEW-8'	new wrap	6	64	0.4	0.5	1,149	2,520
IN	Interior	1246	John F. Kennedy-Elementary	Bath 8	1	2x40W INCANDESCENTS	old drum	1	80	0.1	2L2' T8 15w/ELEE LO/NEW	new wrap	1	24	0.0	0.1	186	3,320
IN	Interior	1247	John F. Kennedy-Elementary	Bath Staff	1	3x13W COMPACT HARDV	drum	1	45	0.0	NO RETRO	no change needed		45	0.0			3,320
IN	Interior	1248	John F. Kennedy-Elementary	Classroom 6	1	4L4' T12 EE/EEMAG-8'	old wrap	3	140	0.4	2L4' T8 28w/ELEE HI/NEW-8'	new wrap	3	64	0.2	0.2	575	2,520

In or Out	ECM	Line	Building Name	Location	Fl	Pre Fixture Description	Pre Fixture Style	Pre Qty	Pre Watts	Pre kW	Post Fixture Description	Post Fixture Style	Post Qty	Post Watts	Post kW	kW Saved	kWH Saved	Annual Hours
IN	Interior	1249	John F. Kennedy-Elementary	Classroom 6	1	2L4' T12 EE/EEMAG	old wrap	1	70	0.1	1L4' T8 28w/ELEE HI/NEW	new wrap	1	33	0.0	0.0	93	2,520
IN	Interior	1250	John F. Kennedy-Elementary	Classroom 6	1	4L4' T12 EE/EEMAG-8'	old wrap	5	140	0.7	2L4' T8 28w/ELEE HI/NEW-8'	new wrap	5	64	0.3	0.4	958	2,520
IN	Interior	1251	John F. Kennedy-Elementary	Classroom 6	1	2L4' T12 EE/EEMAG	old wrap	2	70	0.1	1L4' T8 28w/ELEE HI/NEW	new wrap	2	33	0.1	0.1	186	2,520
IN	Interior	1252	John F. Kennedy-Elementary	Closet 6	1	4L2' T12 STD/STD	old wrap wide	1	112	0.1	2L2' T8 15w/ELEE LO/NEW	new wrap	1	24	0.0	0.1	44	500
IN	Interior	1253	John F. Kennedy-Elementary	Bath 6	1	2x40W INCANDESCENTS	old drum	1	80	0.1	2L2' T8 15w/ELEE LO/NEW	new wrap	1	24	0.0	0.1	186	3,320
IN	Interior	1254	John F. Kennedy-Elementary	Classroom 7	1	4L4' T12 EE/EEMAG-8'	old wrap	3	140	0.4	2L4' T8 28w/ELEE HI/NEW-8'	new wrap	3	64	0.2	0.2	575	2,520
IN	Interior	1255	John F. Kennedy-Elementary	Classroom 7	1	4L4' T12 EE/EEMAG-8'	old wrap	6	140	0.8	2L4' T8 28w/ELEE HI/NEW-8'	new wrap	6	64	0.4	0.5	1,149	2,520
IN	Interior	1256	John F. Kennedy-Elementary	Bath 7	1	2x40W INCANDESCENTS	old drum	1	80	0.1	2L2' T8 15w/ELEE LO/NEW	new wrap	1	24	0.0	0.1	186	3,320
IN	Interior	1257	John F. Kennedy-Elementary	Classroom 5	1	4L4' T12 EE/EEMAG-8'	old wrap	3	140	0.4	2L4' T8 28w/ELEE HI/NEW-8'	new wrap	3	64	0.2	0.2	575	2,520
IN	Interior	1258	John F. Kennedy-Elementary	Classroom 5	1	4L4' T12 EE/EEMAG-8'	old wrap	6	140	0.8	2L4' T8 28w/ELEE HI/NEW-8'	new wrap	6	64	0.4	0.5	1,149	2,520
IN	Interior	1259	John F. Kennedy-Elementary	Bath 5	1	2x40W INCANDESCENTS	old drum	1	80	0.1	2L2' T8 15w/ELEE LO/NEW	new wrap	1	24	0.0	0.1	186	3,320
IN	Interior	1260	John F. Kennedy-Elementary	Classroom 3	1	4L4' T12 EE/EEMAG-8'	old wrap	3	140	0.4	2L4' T8 28w/ELEE HI/NEW-8'	new wrap	3	64	0.2	0.2	575	2,520
IN	Interior	1261	John F. Kennedy-Elementary	Classroom 3	1	4L4' T12 EE/EEMAG-8'	old wrap	6	140	0.8	2L4' T8 28w/ELEE HI/NEW-8'	new wrap	6	64	0.4	0.5	1,149	2,520
IN	Interior	1262	John F. Kennedy-Elementary	Bath 3	1	2x40W INCANDESCENTS	old drum	1	80	0.1	2L2' T8 15w/ELEE LO/NEW	new wrap	1	24	0.0	0.1	186	3,320
IN	Interior	1263	John F. Kennedy-Elementary	Classroom 1	1	4L4' T12 EE/EEMAG-8'	old wrap	3	140	0.4	2L4' T8 28w/ELEE HI/NEW-8'	new wrap	3	64	0.2	0.2	575	2,520
IN	Interior	1264	John F. Kennedy-Elementary	Classroom 1	1	4L4' T12 EE/EEMAG-8'	old wrap	6	140	0.8	2L4' T8 28w/ELEE HI/NEW-8'	new wrap	6	64	0.4	0.5	1,149	2,520
IN	Interior	1265	John F. Kennedy-Elementary	Bath 1	1	2x40W INCANDESCENTS	old drum	1	80	0.1	2L2' T8 15w/ELEE LO/NEW	new wrap	1	24	0.0	0.1	186	3,320
IN	Interior	1266	John F. Kennedy-Elementary	Classroom 4	1	4L4' T12 EE/EEMAG-8'	old wrap	4	140	0.6	2L4' T8 28w/ELEE HI/NEW-8'	new wrap	4	64	0.3	0.3	766	2,520
IN	Interior	1267	John F. Kennedy-Elementary	Classroom 4	1	2L4' T12 EE/EEMAG	old wrap	1	70	0.1	1L4' T8 28w/ELEE HI/NEW	new wrap	1	33	0.0	0.0	93	2,520
IN	Interior	1268	John F. Kennedy-Elementary	Classroom 4	1	4L4' T12 EE/EEMAG-8'	old wrap	7	140	1.0	2L4' T8 28w/ELEE HI/NEW-8'	new wrap	7	64	0.4	0.5	1,341	2,520
IN	Interior	1269	John F. Kennedy-Elementary	Classroom 4	1	2L4' T12 EE/EEMAG	old wrap	1	70	0.1	1L4' T8 28w/ELEE HI/NEW	new wrap	1	33	0.0	0.0	93	2,520
IN	Interior	1270	John F. Kennedy-Elementary	Closet 4	1	22W & 32W CIRCLELINE	old drum	1	58	0.1	2L2' T8 15w/ELEE LO/NEW	new wrap	1	24	0.0	0.0	17	500
IN	Interior	1271	John F. Kennedy-Elementary	Bath 4	1	2x40W INCANDESCENTS	old drum	1	80	0.1	2L2' T8 15w/ELEE LO/NEW	new wrap	1	24	0.0	0.1	186	3,320
IN	Interior	1272	John F. Kennedy-Elementary	Closet Clean	1	3x13W COMPACT HARDW	drum	1	45	0.0	NO RETRO	no change needed		45	0.0			500
IN	Interior	1273	John F. Kennedy-Elementary	Classroom 6	1	4L4' T12 EE/EEMAG-8'	old wrap	3	140	0.4	2L4' T8 28w/ELEE HI/NEW-8'	new wrap	3	64	0.2	0.2	575	2,520
IN	Interior	1274	John F. Kennedy-Elementary	Classroom 6	1	2L4' T12 EE/EEMAG	old wrap	1	70	0.1	1L4' T8 28w/ELEE HI/NEW	new wrap	1	33	0.0	0.0	93	2,520
IN	Interior	1275	John F. Kennedy-Elementary	Classroom 6	1	4L4' T12 EE/EEMAG-8'	old wrap	5	140	0.7	2L4' T8 28w/ELEE HI/NEW-8'	new wrap	5	64	0.3	0.4	958	2,520
IN	Interior	1276	John F. Kennedy-Elementary	Classroom 6	1	2L4' T12 EE/EEMAG	old wrap	2	70	0.1	1L4' T8 28w/ELEE HI/NEW	new wrap	2	33	0.1	0.1	186	2,520
IN	Interior	1277	John F. Kennedy-Elementary	Bath 6	1	2x40W INCANDESCENTS	old drum	1	80	0.1	2L2' T8 15w/ELEE LO/NEW	new wrap	1	24	0.0	0.1	186	3,320
IN	Interior	1278	John F. Kennedy-Elementary	Hall 10 To 1	1	2L4' T12 EE/EEMAG	old wrap	14	70	1.0	1L4' T8 28w/ELEE HI/NEW	new wrap	14	33	0.5	0.5	1,875	3,620
IN	Interior	1279	John F. Kennedy-Elementary	Storage By Stair 1	1	2L4' T12 U EE/EEMAG	trof acr	1	70	0.1	2L2' T8 15w/ELEE HI/RFL	rlrb rfl	1	33	0.0	0.0	19	500
IN	Interior	1280	John F. Kennedy-Elementary	Storage By Stair 1	1	2x40W INCANDESCENTS	old drum	3	80	0.2	2L2' T8 15w/ELEE LO/NEW	new wrap	3	24	0.1	0.2	84	500
IN	Interior	1281	John F. Kennedy-Elementary	Lobby Elevator	1	3L4' T12 EE/EEMAG	trof acr	4	110	0.4	3L4' T8 28w/ELEE LO	rlrb	4	63	0.3	0.2	681	3,620
IN	Interior	1282	John F. Kennedy-Elementary	Classroom Music	1	6L2' T12 STD/STD	trof acr	24	168	4.0	4L2' T8 15w/ELEE LO	rlrb	24	54	1.3	2.7	6,895	2,520
IN	Interior	1283	John F. Kennedy-Elementary	Classroom Music	1	22W CIRCLELINE HARDW	drum	3	24	0.1	2L2' T8 15w/ELEE LO/NEW	new wrap	3	24	0.1			2,520
IN	Interior	1284	John F. Kennedy-Elementary	Bath Staff	1	2L4' T8 32w/EL	old wrap	1	60	0.1	1L4' T8 28w/ELEE HI/NEW	new wrap	1	33	0.0	0.0	90	3,320
IN	Interior	1285	John F. Kennedy-Elementary	Bath Staff	1	2L2' T12 STD/STD	vanity	1	56	0.1	2L2' T8 15w/ELEE LO/NEW	new vanity	1	24	0.0	0.0	106	3,320
IN	Interior	1286	John F. Kennedy-Elementary	Bath Staff	1	4L4' T8 32w/EL	wrap	1	112	0.1	2L4' T8 28w/ELEE HI/NEW	new wrap wide	1	64	0.1	0.0	159	3,320
IN	Interior	1287	John F. Kennedy-Elementary	Bath Staff	1	2L2' T12 STD/STD	vanity	1	56	0.1	2L2' T8 15w/ELEE LO/NEW	new vanity	1	24	0.0	0.0	106	3,320
IN	Interior	1288	John F. Kennedy-Elementary	Lounge Staff	1	4L4' T8 32w/EL	decorative	2	112	0.2	4L4' T8 28w/ELEE LO	rlrb	2	83	0.2	0.1	146	2,520
IN	Interior	1289	John F. Kennedy-Elementary	Office Main	1	4L4' T12 EE/EEMAG-8'	wrap	2	140	0.3	2L4' T8 28w/ELEE HI/NEW-8'	new wrap	2	64	0.1	0.2	353	2,320
IN	Interior	1290	John F. Kennedy-Elementary	Office Main	1	2L4' T12 EE/EEMAG	wrap	2	70	0.1	1L4' T8 28w/ELEE HI/NEW	new wrap	2	33	0.1	0.1	172	2,320
IN	Interior	1291	John F. Kennedy-Elementary	Office Principal	1	3L4' T12 EE/EEMAG	trof acr	4	110	0.4	3L4' T8 28w/ELEE LO	rlrb	4	63	0.3	0.2	436	2,320
IN	Interior	1292	John F. Kennedy-Elementary	Office Nurse	1	2L4' T12 EE/EEMAG	old wrap	3	70	0.2	1L4' T8 28w/ELEE HI/NEW	new wrap	3	33	0.1	0.1	258	2,320
IN	Interior	1293	John F. Kennedy-Elementary	Office Nurse	1	2L2' T12 STD/STD	vanity	1	56	0.1	2L2' T8 15w/ELEE LO/NEW	new vanity	1	24	0.0	0.0	74	2,320
IN	Interior	1294	John F. Kennedy-Elementary	Bath Nurse	1	3x13W COMPACT HARDW	drum	1	45	0.0	NO RETRO	no change needed		45	0.0			3,320
IN	Interior	1295	John F. Kennedy-Elementary	Kitchen Prep Area	1	4L4' T12 EE/EEMAG-8'	old wrap	3	140	0.4	4L4' T8 28w/ELEE LO/NEW-8'	new wrap	3	83	0.2	0.2	328	1,920
IN	Interior	1296	John F. Kennedy-Elementary	Kitchen Prep Area	1	2L4' T12 EE/EEMAG	old wrap	1	70	0.1	2L4' T8 28w/ELEE LO/NEW	new wrap	1	42	0.0	0.0	54	1,920

In or Out	ECM	Line	Building Name	Location	Fl	Pre Fixture Description	Pre Fixture Style	Pre Qty	Pre Watts	Pre kW	Post Fixture Description	Post Fixture Style	Post Qty	Post Watts	Post kW	kW Saved	kWH Saved	Annual Hours
IN	Interior	1297	John F. Kennedy-Elementary	Kitchen Grease Hood	1	100W INCANDESCENT	jar	1	100	0.1	23W COMPACT SI/29712/CF23	screw in	1	23	0.0	0.1	148	1,920
IN	Interior	1298	John F. Kennedy-Elementary	Kitchen Wash Area	1	2L4' T8 U/EL	trof acr	2	60	0.1	2L2' T8 15w/ELEE HI/RFL	rlrb rfl	2	33	0.1	0.1	104	1,920
IN	Interior	1299	John F. Kennedy-Elementary	Storage Dry Goods	1	2L4' T8 U/EL	trof acr	2	60	0.1	2L2' T8 15w/ELEE HI/RFL	rlrb rfl	2	33	0.1	0.1	27	500
IN	Interior	1300	John F. Kennedy-Elementary	Conference	1	4L4' T12 EE/EEMAG-8'	old wrap	4	140	0.6	2L4' T8 28w/ELEE HI/NEW-8'	new wrap	4	64	0.3	0.3	705	2,320
IN	Interior	1301	John F. Kennedy-Elementary	Bath Boys	1	2L4' T8 U/EL	trof acr	5	60	0.3	2L2' T8 15w/ELEE HI/RFL	rlrb rfl	5	33	0.2	0.1	448	3,320
IN	Interior	1302	John F. Kennedy-Elementary	Bath Girls	1	2L4' T8 U/EL	trof acr	5	60	0.3	2L2' T8 15w/ELEE HI/RFL	rlrb rfl	5	33	0.2	0.1	448	3,320
IN	Interior	1303	John F. Kennedy-Elementary	Office Custodian	1	2L4' T12 EE/EEMAG	wrap narrow	2	70	0.1	1L4' T8 28w/ELEE HI/NEW	new wrap	2	33	0.1	0.1	172	2,320
IN	Interior	1304	John F. Kennedy-Elementary	Mechanical Boiler	1	1L4' T12 EE/EEMAG	strip reflector	12	40	0.5	1L4' T8 28w/ELEE LO	rlrb	12	22	0.3	0.2	108	500
IN	Interior	1305	John F. Kennedy-Elementary	Stage	1	72W COMPACT SCREWIN	dome	5	72	0.4	2L4' T8 28w/ELEE/NEW	new wrap	5	48	0.2	0.1	278	2,320
IN	Interior	1306	John F. Kennedy-Elementary	Stage	1	250W INCANDESCENT	dome	1	250	0.3	2L4' T8 28w/ELEE/NEW	new wrap	1	48	0.0	0.2	469	2,320
IN	Interior	1307	John F. Kennedy-Elementary	Stage	1	100W INCANDESCENT	sconce	2	100	0.2	23W COMPACT SI/29712/CF23	screw in	2	23	0.0	0.2	357	2,320
IN	Interior	1308	John F. Kennedy-Elementary	Gym	1	400W METAL HALIDE	high bay	6	455	2.7	222 WATT LED/NEW	new LED hibay polylens	6	222	1.3	1.4	4,082	2,920
IN	Interior	1309	John F. Kennedy-Elementary	Hall By Gym	1	2L4' T12 EE/EEMAG	old wrap	19	70	1.3	1L4' T8 28w/ELEE HI/NEW	new wrap	19	33	0.6	0.7	2,545	3,620
IN	Exterior	1310	John F. Kennedy-Elementary	Bldg Mt Fixture 1	ext	250W HI PRESSURE SOD	wallpack	13	295	3.8	133 WATT LED/NEW	new LED wallpack	13	133	1.7	2.1	9,224	4,380
IN	Exterior	1311	John F. Kennedy-Elementary	Bldg Mt Fixture 2	ext	250W HI PRESSURE SOD	flood	1	295	0.3	133 WATT LED/NEW	new LED flood	1	133	0.1	0.2	710	4,380
IN	Exterior	1312	John F. Kennedy-Elementary	Bldg Mt Fixture 3	ext	50W HI PRESSURE SODI	wallpack	3	65	0.2	26 WATT LED/NEW	new LED wallpack	3	26	0.1	0.1	512	4,380
IN	Exterior	1313	John F. Kennedy-Elementary	Bldg Mt Fixture 4	ext	50W HI PRESSURE SODI	canopy	1	65	0.1	26 WATT LED/NEW	new LED exterior area lig	1	26	0.0	0.0	171	4,380
IN	Exterior	1314	John F. Kennedy-Elementary	Bldg Mt Fixture 5	ext	3 WATT LED	wallpack	1	3	0.0	NO RETRO	no change needed		3	0.0			4,380
IN	Exterior	1315	John F. Kennedy-Elementary	Bldg Mt Fixture 6	ext	2x26W COMPACT HARDW	canopy	1	54	0.1	NO RETRO	no change needed		54	0.1			4,380
IN	Exterior	1316	John F. Kennedy-Elementary	Bldg Mt Fixture 7	ext	100W HI PRESSURE SOD	flood	1	130	0.1	49 WATT LED/NEW	new LED flood	1	49	0.0	0.1	355	4,380
IN	Interior	1317	Wayne Valley-High School	Stair 7	s	2L4' T12 EE/EEMAG-8'	old wrap narrow	3	70	0.2	2L4' T8 28w/ELEE LO/NEW-8'	new wrap	3	42	0.1	0.1	306	3,640
IN	Interior	1318	Wayne Valley-High School	Stair 7	s	1L4' T12 EE/EEMAG	old wrap narrow	1	40	0.0	1L4' T8 28w/ELEE HI/NEW	new wrap	1	33	0.0	0.0	25	3,640
IN	Interior	1319	Wayne Valley-High School	Hall Stair 7 To Stair 4	2	1L4' T12 EE/EEMAG	old wrap narrow	27	40	1.1	1L4' T8 28w/ELEE HI/NEW	new wrap	27	33	0.9	0.2	688	3,640
IN	Interior	1320	Wayne Valley-High School	Hall Stair 7 To Stair 4	2	2L4' T12 EE/EEMAG-8'	old wrap narrow	8	70	0.6	2L4' T8 28w/ELEE LO/NEW-8'	new wrap	8	42	0.3	0.2	815	3,640
IN	Interior	1321	Wayne Valley-High School	Hall Stair 7 To Stair 4	2	1L4' T12 EE/EEMAG	strip	2	40	0.1	1L4' T8 28w/ELEE LO/STRIP KI	rlrb strip kit	2	22	0.0	0.0	131	3,640
IN	Interior	1322	Wayne Valley-High School	Classroom 223	2	4L4' T12 EE/EEMAG-8'	old wrap	15	140	2.1	2L4' T8 28w/ELEE HI/NEW-8'	new wrap	15	64	1.0	1.1	3,238	2,840
IN	Interior	1323	Wayne Valley-High School	Classroom 223	2	4L4' T12 EE/EEMAG-8'	old wrap	15	140	2.1	2L4' T8 28w/ELEE HI/NEW-8'	new wrap	15	64	1.0	1.1	3,238	2,840
IN	Interior	1324	Wayne Valley-High School	Classroom 223	2	2L4' T12 EE/EEMAG	old wrap	3	70	0.2	1L4' T8 28w/ELEE HI/NEW	new wrap	3	33	0.1	0.1	315	2,840
IN	Interior	1325	Wayne Valley-High School	Office Wcma	2	2L4' T12 EE/EEMAG	old wrap	4	70	0.3	1L4' T8 28w/ELEE HI/NEW	new wrap	4	33	0.1	0.1	420	2,840
IN	Interior	1326	Wayne Valley-High School	Classroom 222Pr	2	4L4' T12 EE/EEMAG-8'	old wrap	1	140	0.1	2L4' T8 28w/ELEE HI/NEW-8'	new wrap	1	64	0.1	0.1	216	2,840
IN	Interior	1327	Wayne Valley-High School	Classroom 222Pr	2	4L4' T12 EE/EEMAG-8'	old wrap	9	140	1.3	2L4' T8 28w/ELEE HI/NEW-8'	new wrap	9	64	0.6	0.7	1,943	2,840
IN	Interior	1328	Wayne Valley-High School	Storage Sc222	2	2L4' T12 EE/EEMAG	old wrap	4	70	0.3	1L4' T8 28w/ELEE HI/NEW	new wrap	4	33	0.1	0.1	74	500
IN	Interior	1329	Wayne Valley-High School	Classroom 225	2	4L4' T12 EE/EEMAG-8'	old wrap	15	140	2.1	2L4' T8 28w/ELEE HI/NEW-8'	new wrap	15	64	1.0	1.1	3,238	2,840
IN	Interior	1330	Wayne Valley-High School	Classroom 225	2	2L4' T12 EE/EEMAG	old wrap	3	70	0.2	1L4' T8 28w/ELEE HI/NEW	new wrap	3	33	0.1	0.1	315	2,840
IN	Interior	1331	Wayne Valley-High School	Classroom 222	2	4L4' T12 EE/EEMAG-8'	old wrap	15	140	2.1	2L4' T8 28w/ELEE HI/NEW-8'	new wrap	15	64	1.0	1.1	3,238	2,840
IN	Interior	1332	Wayne Valley-High School	Classroom 222	2	2L4' T12 EE/EEMAG	old wrap	3	70	0.2	1L4' T8 28w/ELEE HI/NEW	new wrap	3	33	0.1	0.1	315	2,840
IN	Interior	1333	Wayne Valley-High School	Classroom 221	2	6L4' T8 32w/EL-8'	indirect	9	180	1.6	6L4' T8 28w/ELEE LO-8'	rlrb	9	126	1.1	0.5	1,380	2,840
IN	Interior	1334	Wayne Valley-High School	Classroom 221	2	3L4' T8 32w/EL	indirect	3	88	0.3	3L4' T8 28w/ELEE LO	rlrb	3	63	0.2	0.1	213	2,840
IN	Interior	1335	Wayne Valley-High School	Storage 220Me	2	42W COMPACT HARDWI	dome	7	44	0.3	2L4' T8 28w/ELEE LO/NEW	new wrap	7	42	0.3	0.0	7	500
IN	Interior	1336	Wayne Valley-High School	Bath 220Wt	2	2L4' T8 32w/EL-8'	old wrap narrow	1	60	0.1	2L4' T8 28w/ELEE LO/NEW-8'	new wrap	1	42	0.0	0.0	66	3,640
IN	Interior	1337	Wayne Valley-High School	Bath 220Wt	2	1L4' T8 32w/EL	old wrap narrow	1	30	0.0	1L4' T8 28w/ELEE HI/NEW	new wrap	1	33	0.0	0.0	-11	3,640
IN	Interior	1338	Wayne Valley-High School	Bath 220Wt	2	1L4' T12 EE/EEMAG	old vanity	1	40	0.0	1L4' T8 28w/ELEE LO/NEW	new vanity	1	22	0.0	0.0	66	3,640
IN	Interior	1339	Wayne Valley-High School	Bath 220Mt	2	2L4' T8 32w/EL-8'	old wrap narrow	1	60	0.1	2L4' T8 28w/ELEE LO/NEW-8'	new wrap	1	42	0.0	0.0	66	3,640
IN	Interior	1340	Wayne Valley-High School	Bath 220Mt	2	1L4' T8 32w/EL	old wrap narrow	1	30	0.0	1L4' T8 28w/ELEE HI/NEW	new wrap	1	33	0.0	0.0	-11	3,640
IN	Interior	1341	Wayne Valley-High School	Bath 220Mt	2	1L4' T8 32w/EL	old vanity	1	30	0.0	1L4' T8 28w/ELEE LO/NEW	new vanity	1	22	0.0	0.0	29	3,640
IN	Interior	1342	Wayne Valley-High School	Bath 220Bt	2	2L4' T12 EE/EEMAG-8'	old wrap narrow	1	70	0.1	2L4' T8 28w/ELEE LO/NEW-8'	new wrap	1	42	0.0	0.0	102	3,640
IN	Interior	1343	Wayne Valley-High School	Bath 220Bt	2	1L4' T12 EE/EEMAG	old wrap narrow	1	40	0.0	1L4' T8 28w/ELEE HI/NEW	new wrap	1	33	0.0	0.0	25	3,640
IN	Interior	1344	Wayne Valley-High School	Bath 220Bt	2	1L4' T12 EE/EEMAG	old vanity	1	40	0.0	1L4' T8 28w/ELEE LO/NEW	new vanity	1	22	0.0	0.0	66	3,640

In or Out	ECM	Line	Building Name	Location	Fl	Pre Fixture Description	Pre Fixture Style	Pre Qty	Pre Watts	Pre kW	Post Fixture Description	Post Fixture Style	Post Qty	Post Watts	Post kW	kW Saved	kWH Saved	Annual Hours
IN	Interior	1345	Wayne Valley-High School	Closet Clean	2	100W INCANDESCENT	dome	1	100	0.1	23W COMPACT SI/29712/CF23	screw in	1	23	0.0	0.1	39	500
IN	Interior	1346	Wayne Valley-High School	Bath 220Gt	2	2L4' T12 EE/EEMAG-8'	old wrap narrow	1	70	0.1	2L4' T8 28w/ELEE LO/NEW-8'	new wrap	1	42	0.0	0.0	102	3,640
IN	Interior	1347	Wayne Valley-High School	Bath 220Gt	2	1L4' T12 EE/EEMAG	old wrap narrow	1	40	0.0	1L4' T8 28w/ELEE HI/NEW	new wrap	1	33	0.0	0.0	25	3,640
IN	Interior	1348	Wayne Valley-High School	Bath 220Gt	2	1L4' T12 EE/EEMAG	old vanity	1	40	0.0	1L4' T8 28w/ELEE LO/NEW	new vanity	1	22	0.0	0.0	66	3,640
IN	Interior	1349	Wayne Valley-High School	Stair 4	s	1L4' T12 EE/EEMAG	old wrap narrow	4	40	0.2	1L4' T8 28w/ELEE HI/NEW	new wrap	4	33	0.1	0.0	102	3,640
IN	Interior	1350	Wayne Valley-High School	Hall 219 To 217	2	1L4' T12 EE/EEMAG	old wrap narrow	14	40	0.6	1L4' T8 28w/ELEE HI/NEW	new wrap	14	33	0.5	0.1	357	3,640
IN	Interior	1351	Wayne Valley-High School	Classroom 219	2	4L4' T12 EE/EEMAG-8'	old wrap	16	140	2.2	2L4' T8 28w/ELEE HI/NEW-8'	new wrap	16	64	1.0	1.2	3,453	2,840
IN	Interior	1352	Wayne Valley-High School	Storage 219	2	2L4' T12 EE/EEMAG	industrial	1	70	0.1	2L4' T8 28w/ELEE LO	rlrb	1	42	0.0	0.0	14	500
IN	Interior	1353	Wayne Valley-High School	Office 219	2	2L4' T12 EE/EEMAG	old wrap	1	70	0.1	1L4' T8 28w/ELEE HI/NEW	new wrap	1	33	0.0	0.0	105	2,840
IN	Interior	1354	Wayne Valley-High School	Storage Kiln	2	4L4' T12 EE/EEMAG-8'	old wrap	2	140	0.3	2L4' T8 28w/ELEE HI/NEW-8'	new wrap	2	64	0.1	0.2	371	2,440
IN	Interior	1355	Wayne Valley-High School	Office 218	2	2L4' T8 32w/EL	old wrap	2	60	0.1	1L4' T8 28w/ELEE HI/NEW	new wrap	2	33	0.1	0.1	153	2,840
IN	Interior	1356	Wayne Valley-High School	Office 218	2	2L4' T12 EE/EEMAG	strip reflector	1	70	0.1	2L4' T8 28w/ELEE LO	rlrb	1	42	0.0	0.0	80	2,840
IN	Interior	1357	Wayne Valley-High School	Classroom 218	2	4L4' T12 EE/EEMAG-8'	old wrap	16	140	2.2	2L4' T8 28w/ELEE HI/NEW-8'	new wrap	16	64	1.0	1.2	3,453	2,840
IN	Interior	1358	Wayne Valley-High School	Storage Supplies	2	1L4' T12 EE/EEMAG	old wrap narrow	1	40	0.0	1L4' T8 28w/ELEE HI/NEW	new wrap	1	33	0.0	0.0	17	2,440
IN	Interior	1359	Wayne Valley-High School	Office 218	2	2L4' T12 EE/EEMAG	old wrap	1	70	0.1	1L4' T8 28w/ELEE HI/NEW	new wrap	1	33	0.0	0.0	105	2,840
IN	Interior	1360	Wayne Valley-High School	Storage By 218	2	2L4' T12 EE/EEMAG	old wrap	6	70	0.4	1L4' T8 28w/ELEE HI/NEW	new wrap	6	33	0.2	0.2	542	2,440
IN	Interior	1361	Wayne Valley-High School	Classroom 217	2	4L4' T12 EE/EEMAG-8'	old wrap	9	140	1.3	2L4' T8 28w/ELEE HI/NEW-8'	new wrap	9	64	0.6	0.7	1,943	2,840
IN	Interior	1362	Wayne Valley-High School	Stair 5	s	2L4' T12 EE/EEMAG-8'	old wrap	3	70	0.2	2L4' T8 28w/ELEE LO/NEW-8'	new wrap	3	42	0.1	0.1	306	3,640
IN	Interior	1363	Wayne Valley-High School	Stair 5	s	2L4' T12 EE/EEMAG	wrap	1	70	0.1	1L4' T8 28w/ELEE HI/NEW	new wrap	1	33	0.0	0.0	135	3,640
IN	Interior	1364	Wayne Valley-High School	Hall Foot Bridge	2	2L4' T8 32w/EL	trof acr	3	60	0.2	2L4' T8 28w/ELEE LO	rlrb	3	42	0.1	0.1	197	3,640
IN	Interior	1365	Wayne Valley-High School	Hall Foot Bridge	2	2L4' T8 32w/EL	trof acr	4	60	0.2	2L4' T8 28w/ELEE LO	rlrb	4	42	0.2	0.1	183	2,548
IN	Interior	1366	Wayne Valley-High School	Hall 256 To Foot Bridge	2	4L4' T8 32w/EL	decorative	1	112	0.1	4L4' T8 28w/ELEE LO	rlrb	1	83	0.1	0.0	106	3,640
IN	Interior	1367	Wayne Valley-High School	Hall 256 To Foot Bridge	2	2L4' T8 32w/EL	trof acr	3	60	0.2	2L4' T8 28w/ELEE LO	rlrb	3	42	0.1	0.1	197	3,640
IN	Interior	1368	Wayne Valley-High School	Hall 256 To Foot Bridge	2	2L4' T8 32w/EL	trof acr	11	60	0.7	2L4' T8 28w/ELEE LO	rlrb	11	42	0.5	0.2	505	2,548
IN	Interior	1369	Wayne Valley-High School	Hall 256 To Foot Bridge	2	4L4' T8 32w/EL	decorative	4	112	0.4	4L4' T8 28w/ELEE LO	rlrb	4	83	0.3	0.1	296	2,548
IN	Interior	1370	Wayne Valley-High School	Stair By 250	s	150W METAL HALIDE	indirect	3	190	0.6	NO RETRO	no change		190	0.6			3,640
IN	Interior	1371	Wayne Valley-High School	Stair By 250	s	2L4' T8 32w/EL	trof acr	1	60	0.1	2L4' T8 28w/ELEE LO	rlrb	1	42	0.0	0.0	66	3,640
IN	Interior	1372	Wayne Valley-High School	Stair By 256	s	2L4' T8 32w/EL	trof acr	3	60	0.2	2L4' T8 28w/ELEE LO	rlrb	3	42	0.1	0.1	197	3,640
IN	Interior	1373	Wayne Valley-High School	Stair By 256	s	2L4' T8 32w/EL	trof acr	1	60	0.1	2L4' T8 28w/ELEE LO	rlrb	1	42	0.0	0.0	66	3,640
IN	Interior	1374	Wayne Valley-High School	Classroom 256	2	3L4' T8 32w/EL	trof para dbl switc	15	88	1.3	2L4' T8 28w/ELEE HI/RFL	rlrb RT8 kit	15	64	1.0	0.4	1,022	2,840
IN	Interior	1375	Wayne Valley-High School	Classroom 253	2	3L4' T8 32w/EL	trof para dbl switc	15	88	1.3	2L4' T8 28w/ELEE HI/RFL	rlrb RT8 kit	15	64	1.0	0.4	1,022	2,840
IN	Interior	1376	Wayne Valley-High School	Storage 253Sc	2	2L4' T8 32w/EL	wrap	4	60	0.2	1L4' T8 28w/ELEE HI/NEW	new wrap	4	33	0.1	0.1	54	500
IN	Interior	1377	Wayne Valley-High School	Storage 253Sc	2	2L4' T8 32w/EL	wrap	1	60	0.1	1L4' T8 28w/ELEE HI/NEW	new wrap	1	33	0.0	0.0	14	500
IN	Interior	1378	Wayne Valley-High School	Classroom 254	2	3L4' T8 32w/EL	trof para dbl switc	15	88	1.3	2L4' T8 28w/ELEE HI/RFL	rlrb RT8 kit	15	64	1.0	0.4	1,022	2,840
IN	Interior	1379	Wayne Valley-High School	Storage Prep Room	2	3L4' T8 32w/EL	trof parabolic	3	88	0.3	2L4' T8 28w/ELEE HI/RFL	rlrb rfl	3	64	0.2	0.1	36	500
IN	Interior	1380	Wayne Valley-High School	Bath 251Gr	2	2L2' F40 BIAX/EL	trof acr	1	72	0.1	2L2' F40BIAX/EL28W	rlrb	1	63	0.1	0.0	33	3,640
IN	Interior	1381	Wayne Valley-High School	Bath 251Gr	2	2L4' T8 32w/EL	trof acr	3	60	0.2	2L4' T8 28w/ELEE LO	rlrb	3	42	0.1	0.1	197	3,640
IN	Interior	1382	Wayne Valley-High School	Closet 251Jc	2	2L4' T8 32w/EL	wrap	1	60	0.1	1L4' T8 28w/ELEE HI/NEW	new wrap	1	33	0.0	0.0	9	350
IN	Interior	1383	Wayne Valley-High School	Bath 251Br	2	2L2' F40 BIAX/EL	trof acr	1	72	0.1	2L2' F40BIAX/EL28W	rlrb	1	63	0.1	0.0	33	3,640
IN	Interior	1384	Wayne Valley-High School	Bath 251Br	2	2L4' T8 32w/EL	trof acr	3	60	0.2	2L4' T8 28w/ELEE LO	rlrb	3	42	0.1	0.1	197	3,640
IN	Interior	1385	Wayne Valley-High School	Classroom 251	2	3L4' T8 32w/EL	trof para dbl switc	9	88	0.8	2L4' T8 28w/ELEE HI/RFL	rlrb RT8 kit	9	64	0.6	0.2	613	2,840
IN	Interior	1386	Wayne Valley-High School	Classroom 249	2	3L4' T8 32w/EL	trof para dbl switc	9	88	0.8	2L4' T8 28w/ELEE HI/RFL	rlrb RT8 kit	9	64	0.6	0.2	613	2,840
IN	Interior	1387	Wayne Valley-High School	Classroom 252	2	3L4' T8 32w/EL	trof para dbl switc	8	88	0.7	2L4' T8 28w/ELEE HI/RFL	rlrb RT8 kit	8	64	0.5	0.2	545	2,840
IN	Interior	1388	Wayne Valley-High School	Classroom 250	2	3L4' T8 32w/EL	trof para dbl switc	8	88	0.7	2L4' T8 28w/ELEE HI/RFL	rlrb RT8 kit	8	64	0.5	0.2	545	2,840
IN	Interior	1389	Wayne Valley-High School	Classroom 248	2	4L4' T12 EE/EEMAG-8'	old wrap	6	140	0.8	2L4' T8 28w/ELEE HI/NEW-8'	new wrap	6	64	0.4	0.5	1,295	2,840
IN	Interior	1390	Wayne Valley-High School	Classroom 248	2	2L4' T12 EE/EEMAG	old wrap	2	70	0.1	1L4' T8 28w/ELEE HI/NEW	new wrap	2	33	0.1	0.1	210	2,840
IN	Interior	1391	Wayne Valley-High School	Classroom 247	2	4L4' T12 EE/EEMAG-8'	old wrap	6	140	0.8	2L4' T8 28w/ELEE HI/NEW-8'	new wrap	6	64	0.4	0.5	1,295	2,840
IN	Interior	1392	Wayne Valley-High School	Classroom 247	2	2L4' T12 EE/EEMAG	old wrap	3	70	0.2	1L4' T8 28w/ELEE HI/NEW	new wrap	3	33	0.1	0.1	315	2,840

In or Out	ECM	Line	Building Name	Location	Fl	Pre Fixture Description	Pre Fixture Style	Pre Qty	Pre Watts	Pre kW	Post Fixture Description	Post Fixture Style	Post Qty	Post Watts	Post kW	kW Saved	kWH Saved	Annual Hours
IN	Interior	1393	Wayne Valley-High School	Classroom 246	2	4L4' T12 EE/EEMAG-8'	old wrap	6	140	0.8	2L4' T8 28w/ELEE HI/NEW-8'	new wrap	6	64	0.4	0.5	1,295	2,840
IN	Interior	1394	Wayne Valley-High School	Classroom 246	2	2L4' T12 EE/EEMAG	old wrap	3	70	0.2	1L4' T8 28w/ELEE HI/NEW	new wrap	3	33	0.1	0.1	315	2,840
IN	Interior	1395	Wayne Valley-High School	Classroom 245	2	4L4' T12 EE/EEMAG-8'	old wrap	6	140	0.8	2L4' T8 28w/ELEE HI/NEW-8'	new wrap	6	64	0.4	0.5	1,295	2,840
IN	Interior	1396	Wayne Valley-High School	Classroom 245	2	2L4' T12 EE/EEMAG	old wrap	3	70	0.2	1L4' T8 28w/ELEE HI/NEW	new wrap	3	33	0.1	0.1	315	2,840
IN	Interior	1397	Wayne Valley-High School	Office 244	2	4L4' T12 EE/EEMAG-8'	old wrap	4	140	0.6	2L4' T8 28w/ELEE HI/NEW-8'	new wrap	4	64	0.3	0.3	863	2,840
IN	Interior	1398	Wayne Valley-High School	Mechanical 243	2	150W INCANDESCENT	dome	3	150	0.5	2L2' T8 15w/ELEE LO/NEW	new wrap	3	24	0.1	0.4	189	500
IN	Interior	1399	Wayne Valley-High School	Hall 248 To 237	2	1L4' T12 EE/EEMAG	old wrap narrow	26	40	1.0	1L4' T8 28w/ELEE HI/NEW	new wrap	26	33	0.9	0.2	662	3,640
IN	Interior	1400	Wayne Valley-High School	Hall Display Case	2	1L4' T12 EE/EEMAG	strip	2	40	0.1	1L4' T8 28w/ELEE LO/STRIP KI	rlrb strip kit	2	22	0.0	0.0	131	3,640
IN	Interior	1401	Wayne Valley-High School	Classroom 243	2	4L4' T12 EE/EEMAG-8'	old wrap	6	140	0.8	2L4' T8 28w/ELEE HI/NEW-8'	new wrap	6	64	0.4	0.5	1,295	2,840
IN	Interior	1402	Wayne Valley-High School	Classroom 243	2	2L4' T12 EE/EEMAG	old wrap	3	70	0.2	1L4' T8 28w/ELEE HI/NEW	new wrap	3	33	0.1	0.1	315	2,840
IN	Interior	1403	Wayne Valley-High School	Classroom 242	2	4L4' T12 EE/EEMAG-8'	old wrap	6	140	0.8	2L4' T8 28w/ELEE HI/NEW-8'	new wrap	6	64	0.4	0.5	1,295	2,840
IN	Interior	1404	Wayne Valley-High School	Classroom 242	2	2L4' T12 EE/EEMAG	old wrap	3	70	0.2	1L4' T8 28w/ELEE HI/NEW	new wrap	3	33	0.1	0.1	315	2,840
IN	Interior	1405	Wayne Valley-High School	Office 233	2	4L4' T12 EE/EEMAG-8'	old wrap	2	140	0.3	2L4' T8 28w/ELEE HI/NEW-8'	new wrap	2	64	0.1	0.2	432	2,840
IN	Interior	1406	Wayne Valley-High School	Office 233	2	2L4' T12 EE/EEMAG	old wrap	2	70	0.1	1L4' T8 28w/ELEE HI/NEW	new wrap	2	33	0.1	0.1	210	2,840
IN	Interior	1407	Wayne Valley-High School	Office 241	2	4L4' T12 EE/EEMAG-8'	old wrap	4	140	0.6	2L4' T8 28w/ELEE HI/NEW-8'	new wrap	4	64	0.3	0.3	863	2,840
IN	Interior	1408	Wayne Valley-High School	Office 240	2	4L4' T12 EE/EEMAG-8'	old wrap	4	140	0.6	2L4' T8 28w/ELEE HI/NEW-8'	new wrap	4	64	0.3	0.3	863	2,840
IN	Interior	1409	Wayne Valley-High School	Classroom 234	2	4L4' T12 EE/EEMAG-8'	old wrap	6	140	0.8	2L4' T8 28w/ELEE HI/NEW-8'	new wrap	6	64	0.4	0.5	1,295	2,840
IN	Interior	1410	Wayne Valley-High School	Classroom 234	2	2L4' T12 EE/EEMAG	old wrap	3	70	0.2	1L4' T8 28w/ELEE HI/NEW	new wrap	3	33	0.1	0.1	315	2,840
IN	Interior	1411	Wayne Valley-High School	Classroom 239	2	4L4' T12 EE/EEMAG-8'	old wrap	6	140	0.8	2L4' T8 28w/ELEE HI/NEW-8'	new wrap	6	64	0.4	0.5	1,295	2,840
IN	Interior	1412	Wayne Valley-High School	Classroom 239	2	2L4' T12 EE/EEMAG	old wrap	3	70	0.2	1L4' T8 28w/ELEE HI/NEW	new wrap	3	33	0.1	0.1	315	2,840
IN	Interior	1413	Wayne Valley-High School	Classroom 235	2	4L4' T12 EE/EEMAG-8'	old wrap	6	140	0.8	2L4' T8 28w/ELEE HI/NEW-8'	new wrap	6	64	0.4	0.5	1,295	2,840
IN	Interior	1414	Wayne Valley-High School	Classroom 235	2	2L4' T12 EE/EEMAG	old wrap	3	70	0.2	1L4' T8 28w/ELEE HI/NEW	new wrap	3	33	0.1	0.1	315	2,840
IN	Interior	1415	Wayne Valley-High School	Classroom 238	2	4L4' T12 EE/EEMAG-8'	old wrap	6	140	0.8	2L4' T8 28w/ELEE HI/NEW-8'	new wrap	6	64	0.4	0.5	1,295	2,840
IN	Interior	1416	Wayne Valley-High School	Classroom 238	2	2L4' T12 EE/EEMAG	old wrap	3	70	0.2	1L4' T8 28w/ELEE HI/NEW	new wrap	3	33	0.1	0.1	315	2,840
IN	Interior	1417	Wayne Valley-High School	Classroom 236	2	4L4' T12 EE/EEMAG-8'	old wrap	6	140	0.8	2L4' T8 28w/ELEE HI/NEW-8'	new wrap	6	64	0.4	0.5	1,295	2,840
IN	Interior	1418	Wayne Valley-High School	Classroom 236	2	2L4' T12 EE/EEMAG	old wrap	3	70	0.2	1L4' T8 28w/ELEE HI/NEW	new wrap	3	33	0.1	0.1	315	2,840
IN	Interior	1419	Wayne Valley-High School	Classroom 237	2	4L4' T12 EE/EEMAG-8'	old wrap	6	140	0.8	2L4' T8 28w/ELEE HI/NEW-8'	new wrap	6	64	0.4	0.5	1,295	2,840
IN	Interior	1420	Wayne Valley-High School	Classroom 237	2	2L4' T12 EE/EEMAG	old wrap	3	70	0.2	1L4' T8 28w/ELEE HI/NEW	new wrap	3	33	0.1	0.1	315	2,840
IN	Interior	1421	Wayne Valley-High School	Stair 6	s	2L4' T12 EE/EEMAG-8'	old wrap narrow	2	70	0.1	2L4' T8 28w/ELEE LO/NEW-8'	new wrap	2	42	0.1	0.1	204	3,640
IN	Interior	1422	Wayne Valley-High School	Stair 6	s	2L4' T12 EE/EEMAG-8'	old wrap narrow	1	70	0.1	2L4' T8 28w/ELEE LO/NEW-8'	new wrap	1	42	0.0	0.0	102	3,640
IN	Interior	1423	Wayne Valley-High School	Stair 6	s	1L4' T12 EE/EEMAG	old wrap narrow	2	40	0.1	1L4' T8 28w/ELEE HI/NEW	new wrap	2	33	0.1	0.0	51	3,640
IN	Interior	1424	Wayne Valley-High School	Hall 233 To 225	2	1L4' T12 EE/EEMAG	old wrap narrow	8	40	0.3	1L4' T8 28w/ELEE HI/NEW	new wrap	8	33	0.3	0.1	204	3,640
IN	Interior	1425	Wayne Valley-High School	Hall 233 To 225	2	2L4' T8 32w/EL	trof acr	11	60	0.7	2L4' T8 28w/ELEE LO	rlrb	11	42	0.5	0.2	721	3,640
IN	Interior	1426	Wayne Valley-High School	Closet Clean	2	100W INCANDESCENT	dome	1	100	0.1	23W COMPACT SI/29712/CF23	screw in	1	23	0.0	0.1	39	500
IN	Interior	1427	Wayne Valley-High School	Storage 231	2	2L4' T12 EE/EEMAG	old wrap	2	70	0.1	1L4' T8 28w/ELEE HI/NEW	new wrap	2	33	0.1	0.1	37	500
IN	Interior	1428	Wayne Valley-High School	Office 230	2	2L4' T8 32w/EL	old wrap	2	60	0.1	1L4' T8 28w/ELEE HI/NEW	new wrap	2	33	0.1	0.1	153	2,840
IN	Interior	1429	Wayne Valley-High School	Office 232	2	4L4' T12 EE/EEMAG-8'	old wrap	3	140	0.4	2L4' T8 28w/ELEE HI/NEW-8'	new wrap	3	64	0.2	0.2	648	2,840
IN	Interior	1430	Wayne Valley-High School	Office 232	2	2L4' T12 EE/EEMAG	old wrap	3	70	0.2	1L4' T8 28w/ELEE HI/NEW	new wrap	3	33	0.1	0.1	315	2,840
IN	Interior	1431	Wayne Valley-High School	Office 229	2	2L4' T12 EE/EEMAG	old wrap	2	70	0.1	1L4' T8 28w/ELEE HI/NEW	new wrap	2	33	0.1	0.1	210	2,840
IN	Interior	1432	Wayne Valley-High School	Classroom 228	2	4L4' T8 32w/EL	trof para dbl switc	9	112	1.0	2L4' T8 28w/ELEE HI/RFL	rlrb RT8 kit	9	64	0.6	0.4	1,227	2,840
IN	Interior	1433	Wayne Valley-High School	Classroom 227	2	3L4' T8 32w/EL	trof para dbl switc	6	88	0.5	2L4' T8 28w/ELEE HI/RFL	rlrb RT8 kit	6	64	0.4	0.1	409	2,840
IN	Interior	1434	Wayne Valley-High School	Office 226	2	3L4' T8 32w/EL	trof para dbl switc	6	88	0.5	3L4' T8 28w/ELEE LO (1L&2L BA	rlrb dbl switched	6	64	0.4	0.1	409	2,840
IN	Interior	1435	Wayne Valley-High School	Office 226Sc	2	3L4' T8 32w/EL	trof para dbl switc	9	88	0.8	3L4' T8 28w/ELEE LO (1L&2L BA	rlrb dbl switched	9	64	0.6	0.2	613	2,840
IN	Interior	1436	Wayne Valley-High School	Hall Stair 4 To Stair 3	2	1L4' T12 EE/EEMAG	old wrap narrow	9	40	0.4	1L4' T8 28w/ELEE HI/NEW	new wrap	9	33	0.3	0.1	229	3,640
IN	Interior	1437	Wayne Valley-High School	Hall Stair 3 To Stair 1	2	2L4' T8 32w/EL	trof acr	32	60	1.9	2L4' T8 28w/ELEE LO	rlrb	32	42	1.3	0.6	2,097	3,640
IN	Interior	1438	Wayne Valley-High School	Stair 3	s	1L4' T12 EE/EEMAG	old wrap narrow	4	40	0.2	1L4' T8 28w/ELEE HI/NEW	new wrap	4	33	0.1	0.0	102	3,640
IN	Interior	1439	Wayne Valley-High School	Office Across From 216	2	2L4' T8 32w/EL	trof acr	1	60	0.1	2L4' T8 28w/ELEE LO	rlrb	1	42	0.0	0.0	51	2,840
IN	Interior	1440	Wayne Valley-High School	Closet Clean	2	100W INCANDESCENT	dome	1	100	0.1	23W COMPACT SI/29712/CF23	screw in	1	23	0.0	0.1	39	500

In or Out	ECM	Line	Building Name	Location	Fl	Pre Fixture Description	Pre Fixture Style	Pre Qty	Pre Watts	Pre kW	Post Fixture Description	Post Fixture Style	Post Qty	Post Watts	Post kW	kW Saved	kWH Saved	Annual Hours
IN	Interior	1441	Wayne Valley-High School	Hall 216	2	4L4' T12 EE/EEMAG	old wrap	2	140	0.3	2L4' T8 28w/ELEE HI/NEW	new wrap wide	2	64	0.1	0.2	553	3,640
IN	Interior	1442	Wayne Valley-High School	Closet 216Gs	2	100W INCANDESCENT	keyless	1	100	0.1	23W COMPACT SI/29712/CF23	screw in	1	23	0.0	0.1	39	500
IN	Interior	1443	Wayne Valley-High School	Closet 206	2	4L4' T12 EE/EEMAG	old wrap	1	140	0.1	2L4' T8 28w/ELEE HI/NEW	new wrap wide	1	64	0.1	0.1	38	500
IN	Interior	1444	Wayne Valley-High School	Office 216	2	4L4' T12 EE/EEMAG	old wrap	4	140	0.6	2L4' T8 28w/ELEE HI/NEW	new wrap wide	4	64	0.3	0.3	863	2,840
IN	Interior	1445	Wayne Valley-High School	Classroom 215	2	4L4' T8 32w/EL	trof acr	8	112	0.9	2L4' T8 28w/ELEE HI/RFL	rlrb RT8 kit	8	64	0.5	0.4	1,091	2,840
IN	Interior	1446	Wayne Valley-High School	Classroom 213	2	4L4' T12 EE/EEMAG-8'	old wrap	4	140	0.6	2L4' T8 28w/ELEE HI/NEW-8'	new wrap	4	64	0.3	0.3	863	2,840
IN	Interior	1447	Wayne Valley-High School	Classroom 213	2	2L4' T12 EE/EEMAG	old wrap	4	70	0.3	1L4' T8 28w/ELEE HI/NEW	new wrap	4	33	0.1	0.1	420	2,840
IN	Interior	1448	Wayne Valley-High School	Classroom 214	2	2L4' T12 EE/EEMAG	old wrap	8	70	0.6	1L4' T8 28w/ELEE HI/NEW	new wrap	8	33	0.3	0.3	841	2,840
IN	Interior	1449	Wayne Valley-High School	Classroom 212	2	4L4' T12 EE/EEMAG	old wrap	4	140	0.6	2L4' T8 28w/ELEE HI/NEW	new wrap wide	4	64	0.3	0.3	863	2,840
IN	Interior	1450	Wayne Valley-High School	Classroom 211	2	4L4' T12 EE/EEMAG-8'	old wrap	4	140	0.6	2L4' T8 28w/ELEE HI/NEW-8'	new wrap	4	64	0.3	0.3	863	2,840
IN	Interior	1451	Wayne Valley-High School	Classroom 211	2	2L4' T12 EE/EEMAG	old wrap	4	70	0.3	1L4' T8 28w/ELEE HI/NEW	new wrap	4	33	0.1	0.1	420	2,840
IN	Interior	1452	Wayne Valley-High School	Office 209	2	3x60W INCANDESCENTS	old drum	4	180	0.7	2L2' T8 15w/ELEE LO/NEW	new wrap	4	24	0.1	0.6	1,772	2,840
IN	Interior	1453	Wayne Valley-High School	Classroom 210	2	4L4' T12 EE/EEMAG-8'	old wrap	4	140	0.6	2L4' T8 28w/ELEE HI/NEW-8'	new wrap	4	64	0.3	0.3	863	2,840
IN	Interior	1454	Wayne Valley-High School	Classroom 210	2	2L4' T12 EE/EEMAG	old wrap	4	70	0.3	1L4' T8 28w/ELEE HI/NEW	new wrap	4	33	0.1	0.1	420	2,840
IN	Interior	1455	Wayne Valley-High School	Storage 210	2	2L4' T12 EE/EEMAG	old wrap	1	70	0.1	1L4' T8 28w/ELEE HI/NEW	new wrap	1	33	0.0	0.0	19	500
IN	Interior	1456	Wayne Valley-High School	Mechanical Fan Room	2	32W COMPACT SCREWIN	keyless	2	32	0.1	NO RETRO	no change needed		32	0.1			500
IN	Interior	1457	Wayne Valley-High School	Bath 208Gt	2	1L4' T12 EE/EEMAG	old wrap narrow	3	40	0.1	1L4' T8 28w/ELEE HI/NEW	new wrap	3	33	0.1	0.0	76	3,640
IN	Interior	1458	Wayne Valley-High School	Storage 201	2	4L4' T12 EE/EEMAG	old wrap	2	140	0.3	2L4' T8 28w/ELEE HI/NEW	new wrap wide	2	64	0.1	0.2	76	500
IN	Interior	1459	Wayne Valley-High School	Office 208	2	300W INCANDESCENT	decorative	2	300	0.6	1L4' T8 28w/ELEE HI/NEW	new wrap	2	33	0.1	0.5	1,517	2,840
IN	Interior	1460	Wayne Valley-High School	Closet 208Jc	2	150W INCANDESCENT	keyless	1	150	0.2	23W COMPACT SI/29712/CF23	screw in	1	23	0.0	0.1	64	500
IN	Interior	1461	Wayne Valley-High School	Mechanical Air Handle	2	150W INCANDESCENT	keyless	4	150	0.6	23W COMPACT SI/29712/CF23	screw in	4	23	0.1	0.5	254	500
IN	Interior	1462	Wayne Valley-High School	Bath 208Bt	2	1L4' T12 EE/EEMAG	old wrap	3	40	0.1	1L4' T8 28w/ELEE HI/NEW	new wrap	3	33	0.1	0.0	76	3,640
IN	Interior	1463	Wayne Valley-High School	Closet 202	2	3x60W INCANDESCENTS	old drum	2	180	0.4	2L2' T8 15w/ELEE LO/NEW	new wrap	2	24	0.0	0.3	156	500
IN	Interior	1464	Wayne Valley-High School	Stair 2	s	1L4' T12 EE/EEMAG	old wrap narrow	4	40	0.2	1L4' T8 28w/ELEE HI/NEW	new wrap	4	33	0.1	0.0	102	3,640
IN	Interior	1465	Wayne Valley-High School	Classroom 207	2	4L4' T8 32w/EL	trof acr	4	112	0.4	2L4' T8 28w/ELEE HI/RFL	rlrb RT8 kit	4	64	0.3	0.2	545	2,840
IN	Interior	1466	Wayne Valley-High School	Office 207A	2	2L4' T8 32w/EL	wrap	2	60	0.1	1L4' T8 28w/ELEE HI/NEW	new wrap	2	33	0.1	0.1	153	2,840
IN	Interior	1467	Wayne Valley-High School	Office 207B	2	2L4' T8 32w/EL	wrap	3	60	0.2	1L4' T8 28w/ELEE HI/NEW	new wrap	3	33	0.1	0.1	230	2,840
IN	Interior	1468	Wayne Valley-High School	Classroom 205	2	4L4' T12 EE/EEMAG-8'	old wrap	6	140	0.8	2L4' T8 28w/ELEE HI/NEW-8'	new wrap	6	64	0.4	0.5	1,295	2,840
IN	Interior	1469	Wayne Valley-High School	Classroom 205	2	2L4' T12 EE/EEMAG	old wrap	2	70	0.1	1L4' T8 28w/ELEE HI/NEW	new wrap	2	33	0.1	0.1	210	2,840
IN	Interior	1470	Wayne Valley-High School	Classroom 206	2	4L4' T12 EE/EEMAG-8'	old wrap	4	140	0.6	2L4' T8 28w/ELEE HI/NEW-8'	new wrap	4	64	0.3	0.3	863	2,840
IN	Interior	1471	Wayne Valley-High School	Classroom 206	2	2L4' T12 EE/EEMAG	old wrap	4	70	0.3	1L4' T8 28w/ELEE HI/NEW	new wrap	4	33	0.1	0.1	420	2,840
IN	Interior	1472	Wayne Valley-High School	Classroom 204	2	4L4' T12 EE/EEMAG-8'	old wrap	3	140	0.4	2L4' T8 28w/ELEE HI/NEW-8'	new wrap	3	64	0.2	0.2	648	2,840
IN	Interior	1473	Wayne Valley-High School	Classroom 204	2	2L4' T12 EE/EEMAG	old wrap	3	70	0.2	1L4' T8 28w/ELEE HI/NEW	new wrap	3	33	0.1	0.1	315	2,840
IN	Interior	1474	Wayne Valley-High School	Office 203	2	2L4' T12 EE/EEMAG	old wrap	2	70	0.1	1L4' T8 28w/ELEE HI/NEW	new wrap	2	33	0.1	0.1	210	2,840
IN	Interior	1475	Wayne Valley-High School	Classroom 202	2	4L4' T12 EE/EEMAG-8'	old wrap	4	140	0.6	2L4' T8 28w/ELEE HI/NEW-8'	new wrap	4	64	0.3	0.3	863	2,840
IN	Interior	1476	Wayne Valley-High School	Classroom 202	2	2L4' T12 EE/EEMAG	old wrap	4	70	0.3	1L4' T8 28w/ELEE HI/NEW	new wrap	4	33	0.1	0.1	420	2,840
IN	Interior	1477	Wayne Valley-High School	Classroom 203	2	2L4' T12 EE/EEMAG	old wrap	10	70	0.7	1L4' T8 28w/ELEE HI/NEW	new wrap	10	33	0.3	0.4	1,051	2,840
IN	Interior	1478	Wayne Valley-High School	Classroom 201	2	4L4' T12 EE/EEMAG-8'	old wrap	3	140	0.4	2L4' T8 28w/ELEE HI/NEW-8'	new wrap	3	64	0.2	0.2	648	2,840
IN	Interior	1479	Wayne Valley-High School	Classroom 201	2	2L4' T12 EE/EEMAG	old wrap	3	70	0.2	1L4' T8 28w/ELEE HI/NEW	new wrap	3	33	0.1	0.1	315	2,840
IN	Interior	1480	Wayne Valley-High School	Classroom 200	2	4L4' T12 EE/EEMAG-8'	old wrap	4	140	0.6	2L4' T8 28w/ELEE HI/NEW-8'	new wrap	4	64	0.3	0.3	863	2,840
IN	Interior	1481	Wayne Valley-High School	Classroom 200	2	2L4' T12 EE/EEMAG	old wrap	4	70	0.3	1L4' T8 28w/ELEE HI/NEW	new wrap	4	33	0.1	0.1	420	2,840
IN	Interior	1482	Wayne Valley-High School	Stair 1	s	1L4' T12 EE/EEMAG	old wrap narrow	4	40	0.2	1L4' T8 28w/ELEE HI/NEW	new wrap	4	33	0.1	0.0	102	3,640
IN	Interior	1483	Wayne Valley-High School	Hall Stair 1 To Stair 2	1	2L4' T12 U EE/EEMAG	trof acr	12	70	0.8	2L2' T8 15w/ELEE HI/RFL	rlrb rfl	12	33	0.4	0.4	1,616	3,640
IN	Interior	1484	Wayne Valley-High School	Office Open 124	1	4L4' T12 EE/EEMAG-8'	old wrap	3	140	0.4	2L4' T8 28w/ELEE HI/NEW-8'	new wrap	3	64	0.2	0.2	784	3,440
IN	Interior	1485	Wayne Valley-High School	Office Open 124	1	2L4' T12 EE/EEMAG	old wrap	3	70	0.2	1L4' T8 28w/ELEE HI/NEW	new wrap	3	33	0.1	0.1	382	3,440
IN	Interior	1486	Wayne Valley-High School	Office 124A	1	2L4' T12 EE/EEMAG	old wrap	2	70	0.1	1L4' T8 28w/ELEE HI/NEW	new wrap	2	33	0.1	0.1	210	2,840
IN	Interior	1487	Wayne Valley-High School	Office 124B	1	2L4' T12 EE/EEMAG	old wrap	2	70	0.1	1L4' T8 28w/ELEE HI/NEW	new wrap	2	33	0.1	0.1	210	2,840
IN	Interior	1488	Wayne Valley-High School	Office 124C	1	2L4' T12 EE/EEMAG	old wrap	2	70	0.1	1L4' T8 28w/ELEE HI/NEW	new wrap	2	33	0.1	0.1	210	2,840

In or Out	ECM	Line	Building Name	Location	Fl	Pre Fixture Description	Pre Fixture Style	Pre Qty	Pre Watts	Pre kW	Post Fixture Description	Post Fixture Style	Post Qty	Post Watts	Post kW	kW Saved	kWH Saved	Annual Hours
IN	Interior	1489	Wayne Valley-High School	Office 124D	1	2L4' T12 EE/EEMAG	old wrap	2	70	0.1	1L4' T8 28w/ELEE HI/NEW	new wrap	2	33	0.1	0.1	210	2,840
IN	Interior	1490	Wayne Valley-High School	Storage By Main Office	1	2L4' T12 EE/EEMAG	old wrap	1	70	0.1	1L4' T8 28w/ELEE HI/NEW	new wrap	1	33	0.0	0.0	19	500
IN	Interior	1491	Wayne Valley-High School	Office Principal	1	3L4' T12 EE/EEMAG	trof acr	4	110	0.4	3L4' T8 28w/ELEE LO	rlrb	4	63	0.3	0.2	534	2,840
IN	Interior	1492	Wayne Valley-High School	Office Principal	1	23W COMPACT HARDWI	can rec 12"	2	24	0.0	NO RETRO	no change needed		24	0.0			2,840
IN	Interior	1493	Wayne Valley-High School	Hall To Principals Bath	1	2L4' T12 EE/EEMAG	wrap	1	70	0.1	1L4' T8 28w/ELEE HI/NEW	new wrap	1	33	0.0	0.0	135	3,640
IN	Interior	1494	Wayne Valley-High School	Bath Principal	1	2L4' T12 EE/EEMAG	wrap	1	70	0.1	1L4' T8 28w/ELEE HI/NEW	new wrap	1	33	0.0	0.0	135	3,640
IN	Interior	1495	Wayne Valley-High School	Office Open Main	1	4L4' T12 EE/EEMAG	trof acr	11	140	1.5	2L4' T8 28w/ELEE HI/RFL	rlrb rfl	11	64	0.7	0.8	2,876	3,440
IN	Interior	1496	Wayne Valley-High School	Office Open Main	1	2L4' T8 U/EL	trof acr	2	60	0.1	2L2' T8 15w/ELEE HI/RFL	rlrb rfl	2	33	0.1	0.1	186	3,440
IN	Interior	1497	Wayne Valley-High School	Closet Telephone	1	1L4' T12 EE/EEMAG	old wrap narrow	1	40	0.0	1L4' T8 28w/ELEE HI/NEW	new wrap	1	33	0.0	0.0	4	500
IN	Interior	1498	Wayne Valley-High School	Office 119	1	4L4' T12 EE/EEMAG	trof acr	4	140	0.6	2L4' T8 28w/ELEE HI/RFL	rlrb rfl	4	64	0.3	0.3	863	2,840
IN	Interior	1499	Wayne Valley-High School	Storage Vault	1	100W INCANDESCENT	keyless	1	100	0.1	23W COMPACT SI/29712/CF23	screw in	1	23	0.0	0.1	39	500
IN	Interior	1500	Wayne Valley-High School	Bath Ladies	1	2L4' T8 32w/EL	old wrap narrow	1	60	0.1	1L4' T8 28w/ELEE HI/NEW	new wrap	1	33	0.0	0.0	98	3,640
IN	Interior	1501	Wayne Valley-High School	Storage Copy	1	4L4' T12 EE/EEMAG	trof acr	1	140	0.1	2L4' T8 28w/ELEE HI/RFL	rlrb rfl	1	64	0.1	0.1	185	2,440
IN	Interior	1502	Wayne Valley-High School	Office Open Guidance	1	4L4' T12 EE/EEMAG	trof acr	12	140	1.7	2L4' T8 28w/ELEE HI/RFL	rlrb rfl	12	64	0.8	0.9	3,137	3,440
IN	Interior	1503	Wayne Valley-High School	Office 1	1	2L4' T12 EE/EEMAG	trof acr	2	70	0.1	2L4' T8 28w/ELEE HI	rlrb	2	64	0.1	0.0	34	2,840
IN	Interior	1504	Wayne Valley-High School	Office 2	1	2L4' T12 EE/EEMAG	trof acr	2	70	0.1	2L4' T8 28w/ELEE HI	rlrb	2	64	0.1	0.0	34	2,840
IN	Interior	1505	Wayne Valley-High School	Office 3	1	2L4' T12 EE/EEMAG	trof acr	2	70	0.1	2L4' T8 28w/ELEE HI	rlrb	2	64	0.1	0.0	34	2,840
IN	Interior	1506	Wayne Valley-High School	Office 4	1	2L4' T12 EE/EEMAG	trof acr	3	70	0.2	2L4' T8 28w/ELEE HI	rlrb	3	64	0.2	0.0	51	2,840
IN	Interior	1507	Wayne Valley-High School	Office 5	1	2L4' T12 EE/EEMAG	trof acr	2	70	0.1	2L4' T8 28w/ELEE HI	rlrb	2	64	0.1	0.0	34	2,840
IN	Interior	1508	Wayne Valley-High School	Office 6	1	2L4' T12 EE/EEMAG	trof acr	2	70	0.1	2L4' T8 28w/ELEE HI	rlrb	2	64	0.1	0.0	34	2,840
IN	Interior	1509	Wayne Valley-High School	Office 7	1	2L4' T12 EE/EEMAG	trof acr	2	70	0.1	2L4' T8 28w/ELEE HI	rlrb	2	64	0.1	0.0	34	2,840
IN	Interior	1510	Wayne Valley-High School	Conference Principal	1	4L4' T12 EE/EEMAG	trof acr	9	140	1.3	2L4' T8 28w/ELEE HI/RFL	rlrb rfl	9	64	0.6	0.7	1,943	2,840
IN	Interior	1511	Wayne Valley-High School	Storage By Principal Conference	1	32W COMPACT SCREWI	dome	3	32	0.1	NO RETRO	no change needed		32	0.1			500
IN	Interior	1512	Wayne Valley-High School	Classroom 122 Iss	1	4L4' T12 EE/EEMAG-8'	old wrap	6	140	0.8	2L4' T8 28w/ELEE HI/NEW-8'	new wrap	6	64	0.4	0.5	1,295	2,840
IN	Interior	1513	Wayne Valley-High School	Classroom 122 Iss	1	2L4' T12 EE/EEMAG	old wrap	3	70	0.2	1L4' T8 28w/ELEE HI/NEW	new wrap	3	33	0.1	0.1	315	2,840
IN	Interior	1514	Wayne Valley-High School	Office Open 120	1	3L4' T8 32w/EL	trof para dbl switc	3	88	0.3	3L4' T8 28w/ELEE LO (1L&2L BA	rlrb dbl switched	3	64	0.2	0.1	173	2,408
IN	Interior	1515	Wayne Valley-High School	Office 120A	1	3L4' T8 32w/EL	trof para dbl switc	3	88	0.3	3L4' T8 28w/ELEE LO (1L&2L BA	rlrb dbl switched	3	64	0.2	0.1	143	1,988
IN	Interior	1516	Wayne Valley-High School	Office 120B	1	4L4' T8 32w/EL	trof para dbl switc	4	112	0.4	4L4' T8 28w/ELEE LO (2Lx2 BAL	rlrb dbl switched	4	84	0.3	0.1	318	2,840
IN	Interior	1517	Wayne Valley-High School	Lounge 118	1	4L4' T12 EE/EEMAG-8'	old wrap	4	140	0.6	2L4' T8 28w/ELEE HI/NEW-8'	new wrap	4	64	0.3	0.3	766	2,520
IN	Interior	1518	Wayne Valley-High School	Lounge 118	1	2L4' T12 EE/EEMAG	old wrap	4	70	0.3	1L4' T8 28w/ELEE HI/NEW	new wrap	4	33	0.1	0.1	373	2,520
IN	Interior	1519	Wayne Valley-High School	Storage 116Sc	1	2L4' T12 EE/EEMAG	old wrap	1	70	0.1	1L4' T8 28w/ELEE HI/NEW	new wrap	1	33	0.0	0.0	19	500
IN	Interior	1520	Wayne Valley-High School	Bath 116Bt	1	3L4' T8 32w/EL	trof acr	3	88	0.3	3L4' T8 28w/ELEE LO	rlrb	3	63	0.2	0.1	273	3,640
IN	Interior	1521	Wayne Valley-High School	Storage 116Bt	1	2L4' T12 EE/EEMAG	old wrap	1	70	0.1	1L4' T8 28w/ELEE HI/NEW	new wrap	1	33	0.0	0.0	19	500
IN	Interior	1522	Wayne Valley-High School	Closet 116Jc	1	2L4' T12 EE/EEMAG	old wrap	2	70	0.1	1L4' T8 28w/ELEE HI/NEW	new wrap	2	33	0.1	0.1	37	500
IN	Interior	1523	Wayne Valley-High School	Lobby Main	1	3L4' T8 32w/EL	trof acr	9	88	0.8	3L4' T8 28w/ELEE LO	rlrb	9	63	0.6	0.2	819	3,640
IN	Interior	1524	Wayne Valley-High School	Lobby Main	1	2L4' T12 U EE/EEMAG	decorative	2	70	0.1	2L2' T8 15w/ELEE HI/RFL	rlrb rfl	2	33	0.1	0.1	269	3,640
IN	Interior	1525	Wayne Valley-High School	Lobby Display Case	1	1L4' T12 EE/EEMAG	trof opaque 6"	1	40	0.0	1L4' T8 28w/ELEE LO	rlrb	1	22	0.0	0.0	66	3,640
IN	Interior	1526	Wayne Valley-High School	Stage	1	300W INCANDESCENT	dome	8	300	2.4	2L4' T8 28w/ELEE/NEW	new wrap	8	48	0.4	2.0	6,532	3,240
IN	Interior	1527	Wayne Valley-High School	Auditorium Seating Area	1	2L4' T12 EE/EEMAG-8'	strip	14	70	1.0	2L4' T8 28w/ELEE LO/STRIP KI	rlrb strip kit	14	42	0.6	0.4	1,270	3,240
IN	Interior	1528	Wayne Valley-High School	Auditorium Seating Area	1	1L4' T12 EE/EEMAG	strip	2	40	0.1	1L4' T8 28w/ELEE LO/STRIP KI	rlrb strip kit	2	22	0.0	0.0	117	3,240
IN	Interior	1529	Wayne Valley-High School	Auditorium Seating Area	1	250W METAL HALIDE	can rec 12"	35	295	10.3	22 WATT LED/KIT	Spectrum Lighting can re	35	22	0.8	9.6	30,958	3,240
IN	Interior	1530	Wayne Valley-High School	Auditorium Seating Area	1	150W INCANDESCENT	can rec 9"	33	150	5.0	21 WATT LED SI/LED21Par38/D	screw in led	33	21	0.7	4.3	13,793	3,240
IN	Interior	1531	Wayne Valley-High School	Bath 116Gt	1	3L4' T8 32w/EL	trof acr	2	88	0.2	3L4' T8 28w/ELEE LO	rlrb	2	63	0.1	0.1	182	3,640
IN	Interior	1532	Wayne Valley-High School	Closet Clean	1	100W INCANDESCENT	keyless	1	100	0.1	23W COMPACT SI/29712/CF23	screw in	1	23	0.0	0.1	39	500
IN	Interior	1533	Wayne Valley-High School	Hall Auditorium To 100	1	2L4' T12 U EE/EEMAG	trof acr	21	70	1.5	2L2' T8 15w/ELEE HI/RFL	rlrb rfl	21	33	0.7	0.8	2,828	3,640
IN	Interior	1534	Wayne Valley-High School	Hall Auditorium To 100	1	2L4' T12 EE/EEMAG	old wrap	7	70	0.5	1L4' T8 28w/ELEE HI/NEW	new wrap	7	33	0.2	0.3	943	3,640
IN	Interior	1535	Wayne Valley-High School	Hall Auditorium To 100	1	2L4' T12 EE/EEMAG	old wrap	5	70	0.4	1L4' T8 28w/ELEE HI/NEW	new wrap	5	33	0.2	0.2	673	3,640
IN	Interior	1536	Wayne Valley-High School	Hall Display Cases	1	2L3' T8 25w/EL	old vanity	4	47	0.2	2L3' T8 21w/ELEE/NEW-6'	new vanity	4	45	0.2	0.0	29	3,640

In or Out	ECM	Line	Building Name	Location	Fl	Pre Fixture Description	Pre Fixture Style	Pre Qty	Pre Watts	Pre kW	Post Fixture Description	Post Fixture Style	Post Qty	Post Watts	Post kW	kW Saved	kWH Saved	Annual Hours
IN	Interior	1537	Wayne Valley-High School	Hall Vestibule	1	100W INCANDESCENT	square recessed	1	100	0.1	23W COMPACT SI/29712/CF23	screw in	1	23	0.0	0.1	280	3,640
IN	Interior	1538	Wayne Valley-High School	Cafeteria Seating Area	1	4L4' T12 EE/EEMAG	old wrap	29	140	4.1	2L4' T8 28w/ELEE HI/NEW	new wrap wide	29	64	1.9	2.2	7,582	3,440
IN	Interior	1539	Wayne Valley-High School	Storage Tables	1	4L4' T12 EE/EEMAG	old wrap	4	140	0.6	2L4' T8 28w/ELEE HI/NEW	new wrap wide	4	64	0.3	0.3	152	500
IN	Interior	1540	Wayne Valley-High School	Classroom 109	1	4L4' T12 EE/EEMAG-8'	old wrap	9	140	1.3	2L4' T8 28w/ELEE HI/NEW-8'	new wrap	9	64	0.6	0.7	1,943	2,840
IN	Interior	1541	Wayne Valley-High School	Classroom 107 Tv Studio	1	2L4' T12 U EE/EEMAG	trof acr	16	70	1.1	2L2' T8 15w/ELEE HI/RFL	rlrb RT8 kit	16	33	0.5	0.6	1,681	2,840
IN	Interior	1542	Wayne Valley-High School	Office 107 Tv Studio	1	2L4' T12 U EE/EEMAG	trof acr	6	70	0.4	2L2' T8 15w/ELEE HI/RFL	rlrb rfl	6	33	0.2	0.2	630	2,840
IN	Interior	1543	Wayne Valley-High School	Office 107 Tv Studio	1	2L4' T12 U EE/EEMAG	trof acr	6	70	0.4	2L2' T8 15w/ELEE HI/RFL	rlrb rfl	6	33	0.2	0.2	630	2,840
IN	Interior	1544	Wayne Valley-High School	Storage 107 Tv Studio	1	2L4' T12 EE/EEMAG	old wrap	8	70	0.6	1L4' T8 28w/ELEE HI/NEW	new wrap	8	33	0.3	0.3	148	500
IN	Interior	1545	Wayne Valley-High School	Bath Men	1	2L4' T12 EE/EEMAG	old wrap	1	70	0.1	1L4' T8 28w/ELEE HI/NEW	new wrap	1	33	0.0	0.0	135	3,640
IN	Interior	1546	Wayne Valley-High School	Classroom 110	1	2L4' T8 32w/EL	old wrap	1	60	0.1	1L4' T8 28w/ELEE HI/NEW	new wrap	1	33	0.0	0.0	77	2,840
IN	Interior	1547	Wayne Valley-High School	Classroom 110	1	4L4' T12 EE/EEMAG-8'	old wrap	12	140	1.7	2L4' T8 28w/ELEE HI/NEW-8'	new wrap	12	64	0.8	0.9	2,590	2,840
IN	Interior	1548	Wayne Valley-High School	Classroom 110	1	2L4' T12 EE/EEMAG	old wrap	4	70	0.3	1L4' T8 28w/ELEE HI/NEW	new wrap	4	33	0.1	0.1	420	2,840
IN	Interior	1549	Wayne Valley-High School	Storage 110	1	2L4' T8 32w/EL	old wrap	1	60	0.1	1L4' T8 28w/ELEE HI/NEW	new wrap	1	33	0.0	0.0	14	500
IN	Interior	1550	Wayne Valley-High School	Storage Practice 1	1	2L4' T8 32w/EL	old wrap	1	60	0.1	1L4' T8 28w/ELEE HI/NEW	new wrap	1	33	0.0	0.0	14	500
IN	Interior	1551	Wayne Valley-High School	Storage Practice 2	1	2L4' T8 32w/EL	old wrap	1	60	0.1	1L4' T8 28w/ELEE HI/NEW	new wrap	1	33	0.0	0.0	14	500
IN	Interior	1552	Wayne Valley-High School	Storage Behind Stage	1	2L4' T12 EE/EEMAG	wrap	1	70	0.1	1L4' T8 28w/ELEE HI/NEW	new wrap	1	33	0.0	0.0	19	500
IN	Interior	1553	Wayne Valley-High School	Office Music	1	2L4' T12 EE/EEMAG	eggcrate	3	70	0.2	1L4' T8 28w/ELEE HI/NEW	new wrap	3	33	0.1	0.1	315	2,840
IN	Interior	1554	Wayne Valley-High School	Storage Instruments	1	4L4' T12 EE/EEMAG-8'	old wrap	1	140	0.1	2L4' T8 28w/ELEE HI/NEW-8'	new wrap	1	64	0.1	0.1	185	2,440
IN	Interior	1555	Wayne Valley-High School	Storage Instruments	1	2L4' T12 EE/EEMAG	old wrap	1	70	0.1	1L4' T8 28w/ELEE HI/NEW	new wrap	1	33	0.0	0.0	90	2,440
IN	Interior	1556	Wayne Valley-High School	Classroom 108	1	3L4' T12 EE/EEMAG	trof acr	12	110	1.3	2L4' T8 28w/ELEE HI/RFL	rlrb RT8 kit	12	64	0.8	0.6	1,568	2,840
IN	Interior	1557	Wayne Valley-High School	Classroom 106	1	4L4' T12 EE/EEMAG-8'	old wrap	9	140	1.3	2L4' T8 28w/ELEE HI/NEW-8'	new wrap	9	64	0.6	0.7	1,943	2,840
IN	Interior	1558	Wayne Valley-High School	Classroom 106	1	2L4' T12 EE/EEMAG	old wrap	9	70	0.6	1L4' T8 28w/ELEE HI/NEW	new wrap	9	33	0.3	0.3	946	2,840
IN	Interior	1559	Wayne Valley-High School	Office 106	1	2L4' T12 EE/EEMAG	old wrap	3	70	0.2	1L4' T8 28w/ELEE HI/NEW	new wrap	3	33	0.1	0.1	315	2,840
IN	Interior	1560	Wayne Valley-High School	Storage 106	1	2L4' T12 EE/EEMAG	old wrap	3	70	0.2	1L4' T8 28w/ELEE HI/NEW	new wrap	3	33	0.1	0.1	56	500
IN	Interior	1561	Wayne Valley-High School	Bath Women	1	2L4' T8 32w/EL	old wrap	2	60	0.1	1L4' T8 28w/ELEE HI/NEW	new wrap	2	33	0.1	0.1	197	3,640
IN	Interior	1562	Wayne Valley-High School	Classroom 157	1	4L4' T12 EE/EEMAG-8'	old wrap	6	140	0.8	2L4' T8 28w/ELEE HI/NEW-8'	new wrap	6	64	0.4	0.5	1,295	2,840
IN	Interior	1563	Wayne Valley-High School	Classroom 157	1	2L4' T12 EE/EEMAG	old wrap	6	70	0.4	1L4' T8 28w/ELEE HI/NEW	new wrap	6	33	0.2	0.2	630	2,840
IN	Interior	1564	Wayne Valley-High School	Storage 157	1	2L4' T12 EE/EEMAG	old wrap	4	70	0.3	1L4' T8 28w/ELEE HI/NEW	new wrap	4	33	0.1	0.1	74	500
IN	Interior	1565	Wayne Valley-High School	Classroom 104	1	6L4' T8 32w/EL-8'	indirect	15	180	2.7	6L4' T8 28w/ELEE LO-8'	rlrb	15	126	1.9	0.8	2,300	2,840
IN	Interior	1566	Wayne Valley-High School	Classroom 104	1	3L4' T8 32w/EL	indirect	3	88	0.3	3L4' T8 28w/ELEE LO	rlrb	3	63	0.2	0.1	213	2,840
IN	Interior	1567	Wayne Valley-High School	Conference 104	1	60W INCANDESCENT	track head	4	60	0.2	20 WATT LED/NEW	new LED track head	4	20	0.1	0.2	454	2,840
IN	Interior	1568	Wayne Valley-High School	Storage Camera Equipment	1	150W INCANDESCENT	keyless	2	150	0.3	23W COMPACT SI/29712/CF23	screw in	2	23	0.0	0.3	127	500
IN	Interior	1569	Wayne Valley-High School	Office 103	1	4L4' T12 EE/EEMAG-8'	old wrap	5	140	0.7	2L4' T8 28w/ELEE HI/NEW-8'	new wrap	5	64	0.3	0.4	1,079	2,840
IN	Interior	1570	Wayne Valley-High School	Storage 103	1	4L4' T12 EE/EEMAG-8'	old wrap	2	140	0.3	2L4' T8 28w/ELEE HI/NEW-8'	new wrap	2	64	0.1	0.2	76	500
IN	Interior	1571	Wayne Valley-High School	Storage 103	1	2L4' T12 EE/EEMAG	old wrap	2	70	0.1	1L4' T8 28w/ELEE HI/NEW	new wrap	2	33	0.1	0.1	37	500
IN	Interior	1572	Wayne Valley-High School	Classroom 102	1	4L4' T12 EE/EEMAG-8'	old wrap	14	140	2.0	2L4' T8 28w/ELEE HI/NEW-8'	new wrap	14	64	0.9	1.1	3,022	2,840
IN	Interior	1573	Wayne Valley-High School	Classroom 102	1	2L4' T12 EE/EEMAG	old wrap	3	70	0.2	1L4' T8 28w/ELEE HI/NEW	new wrap	3	33	0.1	0.1	315	2,840
IN	Interior	1574	Wayne Valley-High School	Storage 102	1	4L4' T8 32w/EL	wrap	1	112	0.1	2L4' T8 28w/ELEE HI/NEW	new wrap wide	1	64	0.1	0.0	24	500
IN	Interior	1575	Wayne Valley-High School	Storage 102	1	4L4' T8 32w/EL	wrap	1	112	0.1	2L4' T8 28w/ELEE HI/NEW	new wrap wide	1	64	0.1	0.0	24	500
IN	Interior	1576	Wayne Valley-High School	Classroom 100	1	4L4' T8 32w/EL-8'	wrap	17	112	1.9	2L4' T8 28w/ELEE HI/NEW-8'	new wrap	17	64	1.1	0.8	2,317	2,840
IN	Interior	1577	Wayne Valley-High School	Classroom 100	1	2L4' T8 32w/EL	wrap	1	60	0.1	1L4' T8 28w/ELEE HI/NEW	new wrap	1	33	0.0	0.0	77	2,840
IN	Interior	1578	Wayne Valley-High School	Office 100	1	4L4' T8 32w/EL-8'	wrap	1	112	0.1	2L4' T8 28w/ELEE HI/NEW-8'	new wrap	1	64	0.1	0.0	136	2,840
IN	Interior	1579	Wayne Valley-High School	Office Open 161 It	1	4L4' T12 EE/EEMAG-8'	old wrap	9	140	1.3	2L4' T8 28w/ELEE HI/NEW-8'	new wrap	9	64	0.6	0.7	2,353	3,440
IN	Interior	1580	Wayne Valley-High School	Hall 116 To Stair 3	1	2L4' T12 U EE/EEMAG	trof acr	9	70	0.6	2L2' T8 15w/ELEE HI/RFL	rlrb rfl	9	33	0.3	0.3	1,212	3,640
IN	Interior	1581	Wayne Valley-High School	Hall 116 To Stair 3	1	2L4' T12 U EE/EEMAG	trof opaque	1	70	0.1	2L2' T8 15w/ELEE HI/RFL	rlrb rfl	1	33	0.0	0.0	135	3,640
IN	Interior	1582	Wayne Valley-High School	Hall Display Case	1	1L4' T12 EE/EEMAG	strip	6	40	0.2	1L4' T8 28w/ELEE LO/STRIP KI	rlrb strip kit	6	22	0.1	0.1	393	3,640
IN	Interior	1583	Wayne Valley-High School	Bath 116 Tr	1	2L4' T8 32w/EL	trof acr	1	60	0.1	2L4' T8 28w/ELEE LO	rlrb	1	42	0.0	0.0	66	3,640
IN	Interior	1584	Wayne Valley-High School	Classroom 116	1	4L4' T8 32w/EL	trof acr	19	112	2.1	2L4' T8 28w/ELEE HI/RFL	rlrb RT8 kit	19	64	1.2	0.9	2,590	2,840

In or Out	ECM	Line	Building Name	Location	Fl	Pre Fixture Description	Pre Fixture Style	Pre Qty	Pre Watts	Pre kW	Post Fixture Description	Post Fixture Style	Post Qty	Post Watts	Post kW	kW Saved	kWH Saved	Annual Hours
IN	Interior	1585	Wayne Valley-High School	Bath 116T	1	4L4' T8 32w/EL	trof acr	1	112	0.1	2L4' T8 28w/ELEE HI/RFL	rlrb rfl	1	64	0.1	0.0	175	3,640
IN	Interior	1586	Wayne Valley-High School	Storage 113Sc	1	2L4' T12 EE/EEMAG	old wrap	2	70	0.1	1L4' T8 28w/ELEE HI/NEW	new wrap	2	33	0.1	0.1	37	500
IN	Interior	1587	Wayne Valley-High School	Classroom 114	1	4L4' T12 EE/EEMAG-8'	old wrap	18	140	2.5	2L4' T8 28w/ELEE HI/NEW-8'	new wrap	18	64	1.2	1.4	3,885	2,840
IN	Interior	1588	Wayne Valley-High School	Kitchen Serv Ing Line	1	4L4' T8 32w/EL-8'	wrap	4	112	0.4	4L4' T8 28w/ELEE LO/NEW-8'	new wrap	4	83	0.3	0.1	329	2,840
IN	Interior	1589	Wayne Valley-High School	Kitchen Serv Ing Line	1	2L4' T8 32w/EL	wrap	6	60	0.4	2L4' T8 28w/ELEE LO/NEW	new wrap	6	42	0.3	0.1	307	2,840
IN	Interior	1590	Wayne Valley-High School	Kitchen Prep Area	1	4L4' T12 EE/EEMAG	trof acr	26	140	3.6	4L4' T8 28w/ELEE LO	rlrb	26	83	2.2	1.5	4,209	2,840
IN	Interior	1591	Wayne Valley-High School	Kitchen Prep Area	1	2x13W COMPACT HARDV	can rec	1	30	0.0	NO RETRO	no change needed		30	0.0			2,840
IN	Interior	1592	Wayne Valley-High School	Kitchen Grease Hood	1	100W INCANDESCENT	jar	8	100	0.8	23W COMPACT SI/29712/CF23	screw in	8	23	0.2	0.6	1,749	2,840
IN	Interior	1593	Wayne Valley-High School	Closet Clean	1	32W COMPACT SCREWI	jar	1	32	0.0	NO RETRO	no change needed		32	0.0			500
IN	Interior	1594	Wayne Valley-High School	Kitchen Staff Serv Ing	1	4L4' T12 EE/EEMAG	trof acr	2	140	0.3	4L4' T8 28w/ELEE LO	rlrb	2	83	0.2	0.1	324	2,840
IN	Interior	1595	Wayne Valley-High School	Storage Dry Goods	1	4L4' T12 EE/EEMAG	trof acr	2	140	0.3	2L4' T8 28w/ELEE HI/RFL	rlrb rfl	2	64	0.1	0.2	371	2,440
IN	Interior	1596	Wayne Valley-High School	Office Kitchen	1	4L4' T8 32w/EL	trof acr	2	112	0.2	2L4' T8 28w/ELEE HI/RFL	rlrb rfl	2	64	0.1	0.1	273	2,840
IN	Interior	1597	Wayne Valley-High School	Cafeteria Se4Ating Area	1	4L4' T12 EE/EEMAG	old wrap	12	140	1.7	2L4' T8 28w/ELEE HI/NEW	new wrap wide	12	64	0.8	0.9	3,137	3,440
IN	Interior	1598	Wayne Valley-High School	Hall Stair 3 To Office 126	1	2L4' T8 32w/EL	trof acr	13	60	0.8	2L4' T8 28w/ELEE LO	rlrb	13	42	0.5	0.2	852	3,640
IN	Interior	1599	Wayne Valley-High School	Hall Stair 3 To Office 126	1	1L4' T12 EE/EEMAG	old wrap narrow	1	40	0.0	1L4' T8 28w/ELEE HI/NEW	new wrap	1	33	0.0	0.0	25	3,640
IN	Interior	1600	Wayne Valley-High School	Hall Stair 3 To Office 126	1	2L4' T12 U EE/EEMAG	trof acr	1	70	0.1	2L2' T8 15w/ELEE HI/RFL	rlrb rfl	1	33	0.0	0.0	135	3,640
IN	Interior	1601	Wayne Valley-High School	Office 126 Ao	1	4L4' T12 EE/EEMAG-8'	eggcrate	4	140	0.6	2L4' T8 28w/ELEE HI/NEW-8'	new wrap	4	64	0.3	0.3	863	2,840
IN	Interior	1602	Wayne Valley-High School	Office 126 Ao	1	2L4' T12 EE/EEMAG	eggcrate	2	70	0.1	1L4' T8 28w/ELEE HI/NEW	new wrap	2	33	0.1	0.1	210	2,840
IN	Interior	1603	Wayne Valley-High School	Storage 126 Ao	1	2L4' T12 EE/EEMAG	wrap	1	70	0.1	1L4' T8 28w/ELEE HI/NEW	new wrap	1	33	0.0	0.0	90	2,440
IN	Interior	1604	Wayne Valley-High School	Storage 126 Ao	1	4L4' T12 EE/EEMAG-8'	eggcrate	1	140	0.1	2L4' T8 28w/ELEE HI/NEW-8'	new wrap	1	64	0.1	0.1	185	2,440
IN	Interior	1605	Wayne Valley-High School	Storage 126 Ao	1	4L4' T12 EE/EEMAG	trof acr	1	140	0.1	2L4' T8 28w/ELEE HI/RFL	rlrb rfl	1	64	0.1	0.1	185	2,440
IN	Interior	1606	Wayne Valley-High School	Hall By Drink Machine	1	2L4' T8 32w/EL	old wrap narrow	1	60	0.1	1L4' T8 28w/ELEE HI/NEW	new wrap	1	33	0.0	0.0	98	3,640
IN	Interior	1607	Wayne Valley-High School	Hall By Drink Machine	1	1L2' T8 17w/EL	strip	2	17	0.0	1L2' T8 15w/ELEE/STRIP KIT	rlrb strip kit	2	17	0.0			3,640
IN	Interior	1608	Wayne Valley-High School	Bath Staff	1	1L4' T8 32w/EL	old wrap narrow	1	30	0.0	1L4' T8 28w/ELEE HI/NEW	new wrap	1	33	0.0	0.0	-11	3,640
IN	Interior	1609	Wayne Valley-High School	Bath Staff	1	2L4' T12 EE/EEMAG	old wrap	1	70	0.1	1L4' T8 28w/ELEE HI/NEW	new wrap	1	33	0.0	0.0	135	3,640
IN	Interior	1610	Wayne Valley-High School	Closet Clean	1	150W INCANDESCENT	keyless	1	150	0.2	23W COMPACT SI/29712/CF23	screw in	1	23	0.0	0.1	64	500
IN	Interior	1611	Wayne Valley-High School	Storage Climbing Gear	1	32W COMPACT SCREWI	keyless	1	32	0.0	NO RETRO	no change needed		32	0.0			500
IN	Interior	1612	Wayne Valley-High School	Gym Small	1	400W METAL HALIDE	high bay	40	455	18.2	222 WATT LED/NEW	new LED hibay polylens	40	222	8.9	9.3	32,061	3,440
IN	Interior	1613	Wayne Valley-High School	Locker 127	1	32W COMPACT SCREWI	dome	1	32	0.0	1L4' T8 28w/ELEE HI/NEW	new wrap	1	33	0.0	0.0	-4	3,640
IN	Interior	1614	Wayne Valley-High School	Office Coach	1	2L4' T8 32w/EL	wrap	2	60	0.1	1L4' T8 28w/ELEE HI/NEW	new wrap	2	33	0.1	0.1	153	2,840
IN	Interior	1615	Wayne Valley-High School	Bath Coach	1	2L2' T8 17w/EL	vanity	1	33	0.0	2L2' T8 15w/ELEE LO/NEW	new vanity	1	24	0.0	0.0	33	3,640
IN	Interior	1616	Wayne Valley-High School	Bath Coach	1	2L4' T12 EE/EEMAG	wrap	1	70	0.1	1L4' T8 28w/ELEE HI/NEW	new wrap	1	33	0.0	0.0	135	3,640
IN	Interior	1617	Wayne Valley-High School	Storage Coach	1	60W INCANDESCENT	keyless	1	60	0.1	23W COMPACT SI/29712/CF23	screw in	1	23	0.0	0.0	19	500
IN	Interior	1618	Wayne Valley-High School	Storage A	1	2L4' T8 32w/EL	wrap	2	60	0.1	1L4' T8 28w/ELEE HI/NEW	new wrap	2	33	0.1	0.1	27	500
IN	Interior	1619	Wayne Valley-High School	Locker Boys	1	1L4' T12 EE/EEMAG	old wrap narrow	16	40	0.6	1L4' T8 28w/ELEE HI/NEW	new wrap	16	33	0.5	0.1	408	3,640
IN	Interior	1620	Wayne Valley-High School	Locker Shower	1	100W INCANDESCENT	square recessed	3	100	0.3	23W COMPACT SI/29712/CF23	screw in	3	23	0.1	0.2	841	3,640
IN	Interior	1621	Wayne Valley-High School	Hall By Shower	1	1L4' T12 EE/EEMAG	old wrap narrow	1	40	0.0	1L4' T8 28w/ELEE HI/NEW	new wrap	1	33	0.0	0.0	25	3,640
IN	Interior	1622	Wayne Valley-High School	Closet Clean	1	300W INCANDESCENT	keyless	1	300	0.3	2L2' T8 15w/ELEE LO/NEW	new wrap	1	24	0.0	0.3	138	500
IN	Interior	1623	Wayne Valley-High School	Bath Clean	1	2L4' T12 EE/EEMAG	old wrap	1	70	0.1	1L4' T8 28w/ELEE HI/NEW	new wrap	1	33	0.0	0.0	135	3,640
IN	Interior	1624	Wayne Valley-High School	Bath Clean	1	1L4' T12 EE/EEMAG	old wrap narrow	1	40	0.0	1L4' T8 28w/ELEE HI/NEW	new wrap	1	33	0.0	0.0	25	3,640
IN	Interior	1625	Wayne Valley-High School	Storage Punching Bags	1	150W INCANDESCENT	dome	1	150	0.2	2L2' T8 15w/ELEE LO/NEW	new wrap	1	24	0.0	0.1	63	500
IN	Interior	1626	Wayne Valley-High School	Storage Equipment	1	100W INCANDESCENT	dome	2	100	0.2	23W COMPACT SI/29712/CF23	screw in	2	23	0.0	0.2	77	500
IN	Interior	1627	Wayne Valley-High School	Storage Supplies 1	1	100W INCANDESCENT	keyless	2	100	0.2	23W COMPACT SI/29712/CF23	screw in	2	23	0.0	0.2	77	500
IN	Interior	1628	Wayne Valley-High School	Storage Supplies 2	1	100W INCANDESCENT	keyless	2	100	0.2	23W COMPACT SI/29712/CF23	screw in	2	23	0.0	0.2	77	500
IN	Interior	1629	Wayne Valley-High School	Storage Supplies 3	1	100W INCANDESCENT	keyless	2	100	0.2	23W COMPACT SI/29712/CF23	screw in	2	23	0.0	0.2	77	500
IN	Interior	1630	Wayne Valley-High School	Closet Clean	1	300W INCANDESCENT	keyless	1	300	0.3	2L2' T8 15w/ELEE LO/NEW	new wrap	1	24	0.0	0.3	138	500
IN	Interior	1631	Wayne Valley-High School	Hall Locker Girls	1	1L4' T12 EE/EEMAG	old wrap narrow	8	40	0.3	1L4' T8 28w/ELEE HI/NEW	new wrap	8	33	0.3	0.1	204	3,640
IN	Interior	1632	Wayne Valley-High School	Hall 125 Girls	1	32W COMPACT SCREWI	dome	1	32	0.0	1L4' T8 28w/ELEE HI/NEW	new wrap	1	33	0.0	0.0	-4	3,640

In or Out	ECM	Line	Building Name	Location	Fl	Pre Fixture Description	Pre Fixture Style	Pre Qty	Pre Watts	Pre kW	Post Fixture Description	Post Fixture Style	Post Qty	Post Watts	Post kW	kW Saved	kWH Saved	Annual Hours
IN	Interior	1633	Wayne Valley-High School	Office Coach	1	1L4' T12 EE/EEMAG	wrap	1	40	0.0	1L4' T8 28w/ELEE HI/NEW	new wrap	1	33	0.0	0.0	20	2,840
IN	Interior	1634	Wayne Valley-High School	Bath Coach	1	2L4' T12 EE/EEMAG	wrap	1	70	0.1	1L4' T8 28w/ELEE HI/NEW	new wrap	1	33	0.0	0.0	135	3,640
IN	Interior	1635	Wayne Valley-High School	Bath Coach	1	2L2' T8 17w/EL	vanity	1	33	0.0	2L2' T8 15w/ELEE LO/NEW	new vanity	1	24	0.0	0.0	33	3,640
IN	Interior	1636	Wayne Valley-High School	Storage Equipment	1	100W INCANDESCENT	keyless	1	100	0.1	23W COMPACT SI/29712/CF23	screw in	1	23	0.0	0.1	39	500
IN	Interior	1637	Wayne Valley-High School	Locker 125 Girls	1	1L4' T12 EE/EEMAG	old wrap narrow	16	40	0.6	1L4' T8 28w/ELEE HI/NEW	new wrap	16	33	0.5	0.1	408	3,640
IN	Interior	1638	Wayne Valley-High School	Locker Shower	1	100W INCANDESCENT	square recessed	8	100	0.8	23W COMPACT SI/29712/CF23	screw in	8	23	0.2	0.6	2,242	3,640
IN	Interior	1639	Wayne Valley-High School	Closet Clean	1	100W INCANDESCENT	keyless	1	100	0.1	23W COMPACT SI/29712/CF23	screw in	1	23	0.0	0.1	39	500
IN	Interior	1640	Wayne Valley-High School	Bath Girls Locker	1	1L4' T12 EE/EEMAG	old wrap narrow	1	40	0.0	1L4' T8 28w/ELEE HI/NEW	new wrap	1	33	0.0	0.0	25	3,640
IN	Interior	1641	Wayne Valley-High School	Hall To Exit	1	150W INCANDESCENT	keyless	1	150	0.2	23W COMPACT SI/29712/CF23	screw in	1	23	0.0	0.1	462	3,640
IN	Interior	1642	Wayne Valley-High School	Storage Mats	1	150W INCANDESCENT	dome	2	150	0.3	2L2' T8 15w/ELEE LO/NEW	new wrap	2	24	0.0	0.3	126	500
IN	Interior	1643	Wayne Valley-High School	Hall Stair 4	1	2L4' T12 EE/EEMAG-8'	old wrap narrow	8	70	0.6	2L4' T8 28w/ELEE LO/NEW-8'	new wrap	8	42	0.3	0.2	815	3,640
IN	Interior	1644	Wayne Valley-High School	Hall Stair 4	1	1L4' T12 EE/EEMAG	old wrap narrow	1	40	0.0	1L4' T8 28w/ELEE HI/NEW	new wrap	1	33	0.0	0.0	25	3,640
IN	Interior	1645	Wayne Valley-High School	Hall 125Gt To Auto Shop 130	1	1L4' T12 EE/EEMAG	old wrap narrow	34	40	1.4	1L4' T8 28w/ELEE HI/NEW	new wrap	34	33	1.1	0.2	866	3,640
IN	Interior	1646	Wayne Valley-High School	Hall Display Case	1	2L4' T12 EE/EEMAG	strip	4	70	0.3	1L4' T8 28w/ELEE/STRIP KIT	rlrb strip kit	4	24	0.1	0.2	670	3,640
IN	Interior	1647	Wayne Valley-High School	Bath 125 Gt	1	2L4' T12 U EE/EEMAG	trof acr	1	70	0.1	2L2' T8 15w/ELEE HI/RFL	rlrb rfl	1	33	0.0	0.0	135	3,640
IN	Interior	1648	Wayne Valley-High School	Bath 125 Gt	1	2L4' T12 U EE/EEMAG	trof acr	4	70	0.3	2L2' T8 15w/ELEE HI/RFL	rlrb rfl	4	33	0.1	0.1	539	3,640
IN	Interior	1649	Wayne Valley-High School	Closet Clean	1	32W COMPACT SCREWIN	dome	1	32	0.0	2L2' T8 15w/ELEE LO/NEW	new wrap	1	24	0.0	0.0	4	500
IN	Interior	1650	Wayne Valley-High School	Bath 125Bt	1	2L4' T12 U EE/EEMAG	trof acr	1	70	0.1	2L2' T8 15w/ELEE HI/RFL	rlrb rfl	1	33	0.0	0.0	135	3,640
IN	Interior	1651	Wayne Valley-High School	Bath 125Bt	1	2L4' T12 U EE/EEMAG	trof acr	4	70	0.3	2L2' T8 15w/ELEE HI/RFL	rlrb rfl	4	33	0.1	0.1	539	3,640
IN	Interior	1652	Wayne Valley-High School	Office 125 Athletic Trainer	1	2L4' T12 EE/EEMAG	wrap	4	70	0.3	1L4' T8 28w/ELEE HI/NEW	new wrap	4	33	0.1	0.1	420	2,840
IN	Interior	1653	Wayne Valley-High School	Office 125Bs	1	2L4' T12 EE/EEMAG	wrap	4	70	0.3	1L4' T8 28w/ELEE HI/NEW	new wrap	4	33	0.1	0.1	420	2,840
IN	Interior	1654	Wayne Valley-High School	Storage Ceiling Tiles	1	4L4' T12 EE/EEMAG-8'	industrial	7	140	1.0	4L4' T8 28w/ELEE LO-8'	rlrb	7	83	0.6	0.4	974	2,440
IN	Interior	1655	Wayne Valley-High School	Gym Weight Room	1	4L4' T12 EE/EEMAG-8'	industrial	26	140	3.6	4L4' T8 28w/ELEE LO-8'	rlrb	26	83	2.2	1.5	5,098	3,440
IN	Interior	1656	Wayne Valley-High School	Gym Weight Room	1	2L4' T12 EE/EEMAG	industrial	5	70	0.4	2L4' T8 28w/ELEE LO	rlrb	5	42	0.2	0.1	482	3,440
IN	Interior	1657	Wayne Valley-High School	Storage Weight Room	1	4L4' T12 EE/EEMAG-8'	strip reflector	2	140	0.3	4L4' T8 28w/ELEE LO-8'	rlrb	2	83	0.2	0.1	278	2,440
IN	Interior	1658	Wayne Valley-High School	Shop 129	1	4L4' T12 EE/EEMAG-8'	industrial	28	140	3.9	4L4' T8 28w/ELEE LO-8'	rlrb	28	83	2.3	1.6	3,894	2,440
IN	Interior	1659	Wayne Valley-High School	Shop 129	1	2L4' T12 EE/EEMAG	industrial	9	70	0.6	2L4' T8 28w/ELEE LO	rlrb	9	42	0.4	0.3	615	2,440
IN	Interior	1660	Wayne Valley-High School	Storage Vapor Hood	1	23W COMPACT HARDWI	explosion	2	24	0.0	NO RETRO	no change needed		24	0.0			500
IN	Interior	1661	Wayne Valley-High School	Storage Wood	1	4L4' T8 32w/EL	trof acr	2	112	0.2	2L4' T8 28w/ELEE HI/RFL	rlrb rfl	2	64	0.1	0.1	48	500
IN	Interior	1662	Wayne Valley-High School	Classroom 132	1	2L4' T8 U/EL	trof acr	2	60	0.1	2L2' T8 15w/ELEE HI/RFL	rlrb RT8 kit	2	33	0.1	0.1	153	2,840
IN	Interior	1663	Wayne Valley-High School	Classroom 132	1	4L4' T8 32w/EL	trof acr	11	112	1.2	2L4' T8 28w/ELEE HI/RFL	rlrb RT8 kit	11	64	0.7	0.5	1,500	2,840
IN	Interior	1664	Wayne Valley-High School	Storage 132	1	4L4' T8 32w/EL	trof acr	2	112	0.2	2L4' T8 28w/ELEE HI/RFL	rlrb rfl	2	64	0.1	0.1	48	500
IN	Interior	1665	Wayne Valley-High School	Bath 132Hr	1	4L4' T8 32w/EL	trof acr	3	112	0.3	2L4' T8 28w/ELEE HI/RFL	rlrb rfl	3	64	0.2	0.1	524	3,640
IN	Interior	1666	Wayne Valley-High School	Shop 130 Auto	1	4L4' T12 EE/EEMAG-8'	industrial	5	140	0.7	4L4' T8 28w/ELEE LO/NEW-8'	new industrial	5	83	0.4	0.3	695	2,440
IN	Interior	1667	Wayne Valley-High School	Shop 130 Auto	1	2L4' T12 EE/EEMAG	industrial	4	70	0.3	2L4' T8 28w/ELEE LO	rlrb	4	42	0.2	0.1	273	2,440
IN	Interior	1668	Wayne Valley-High School	Storage Compressor	1	2L4' T12 EE/EEMAG-8'	strip	3	70	0.2	2L4' T8 28w/ELEE LO/STRIP KI	rlrb strip kit	3	42	0.1	0.1	42	500
IN	Interior	1669	Wayne Valley-High School	Storage Compressor	1	1L4' T12 EE/EEMAG	strip	1	40	0.0	1L4' T8 28w/ELEE LO/STRIP KI	rlrb strip kit	1	22	0.0	0.0	9	500
IN	Interior	1670	Wayne Valley-High School	Classroom 131	1	4L4' T12 EE/EEMAG-8'	wrap	6	140	0.8	2L4' T8 28w/ELEE HI/NEW-8'	new wrap	6	64	0.4	0.5	1,295	2,840
IN	Interior	1671	Wayne Valley-High School	Classroom 131	1	2L4' T12 EE/EEMAG	wrap	3	70	0.2	1L4' T8 28w/ELEE HI/NEW	new wrap	3	33	0.1	0.1	315	2,840
IN	Interior	1672	Wayne Valley-High School	Hall By 130Hr	1	1L4' T12 EE/EEMAG	old wrap	4	40	0.2	1L4' T8 28w/ELEE HI/NEW	new wrap	4	33	0.1	0.0	102	3,640
IN	Interior	1673	Wayne Valley-High School	Bath 130Hr	1	2L4' T12 EE/EEMAG-8'	old wrap narrow	1	70	0.1	2L4' T8 28w/ELEE LO/NEW-8'	new wrap	1	42	0.0	0.0	102	3,640
IN	Interior	1674	Wayne Valley-High School	Bath 130Wt	1	2L4' T12 EE/EEMAG-8'	old wrap narrow	1	70	0.1	2L4' T8 28w/ELEE LO/NEW-8'	new wrap	1	42	0.0	0.0	102	3,640
IN	Interior	1675	Wayne Valley-High School	Retail 130 School Store	1	4L4' T12 EE/EEMAG-8'	old wrap	2	140	0.3	2L4' T8 28w/ELEE HI/NEW-8'	new wrap	2	64	0.1	0.2	383	2,520
IN	Interior	1676	Wayne Valley-High School	Office 130 School Store	1	4L4' T12 EE/EEMAG-8'	old wrap	2	140	0.3	2L4' T8 28w/ELEE HI/NEW-8'	new wrap	2	64	0.1	0.2	432	2,840
IN	Interior	1677	Wayne Valley-High School	Storage 130 School Store	1	4L4' T12 EE/EEMAG-8'	old wrap	2	140	0.3	2L4' T8 28w/ELEE HI/NEW-8'	new wrap	2	64	0.1	0.2	76	500
IN	Interior	1678	Wayne Valley-High School	Lobby Gym	1	4L4' T12 EE/EEMAG-8'	trof acr 1' wide	8	140	1.1	4L4' T8 28w/ELEE LO-8'	rlrb	8	83	0.7	0.5	1,660	3,640
IN	Interior	1679	Wayne Valley-High School	Lobby Gym	1	2L4' T12 EE/EEMAG	trof acr 1' wide	8	70	0.6	2L4' T8 28w/ELEE LO	rlrb	8	42	0.3	0.2	815	3,640
IN	Interior	1680	Wayne Valley-High School	Lobby Gym	1	32W COMPACT SCREWIN	can rec 12"	4	32	0.1	NO RETRO	no change needed		32	0.1			3,640

In or Out	ECM	Line	Building Name	Location	Fl	Pre Fixture Description	Pre Fixture Style	Pre Qty	Pre Watts	Pre kW	Post Fixture Description	Post Fixture Style	Post Qty	Post Watts	Post kW	kW Saved	kWH Saved	Annual Hours
IN	Interior	1681	Wayne Valley-High School	Lobby Display Case	1	2L4' T12 EE/EEMAG	strip	6	70	0.4	1L4' T8 28w/ELEE/STRIP KIT	rlrb strip kit	6	24	0.1	0.3	1,005	3,640
IN	Interior	1682	Wayne Valley-High School	Closet By Display Cases	1	100W INCANDESCENT	keyless	1	100	0.1	23W COMPACT SI/29712/CF23	screw in	1	23	0.0	0.1	39	500
IN	Interior	1683	Wayne Valley-High School	Closet By Display Cases	1	100W INCANDESCENT	keyless	1	100	0.1	23W COMPACT SI/29712/CF23	screw in	1	23	0.0	0.1	39	500
IN	Interior	1684	Wayne Valley-High School	Office Open 134	1	4L4' T12 EE/EEMAG-8'	old wrap	6	140	0.8	2L4' T8 28w/ELEE HI/NEW-8'	new wrap	6	64	0.4	0.5	1,569	3,440
IN	Interior	1685	Wayne Valley-High School	Office 134A	1	4L4' T12 EE/EEMAG-8'	old wrap	2	140	0.3	2L4' T8 28w/ELEE HI/NEW-8'	new wrap	2	64	0.1	0.2	432	2,840
IN	Interior	1686	Wayne Valley-High School	Office 134B	1	4L4' T12 EE/EEMAG-8'	old wrap	2	140	0.3	2L4' T8 28w/ELEE HI/NEW-8'	new wrap	2	64	0.1	0.2	432	2,840
IN	Interior	1687	Wayne Valley-High School	Office 134C	1	4L4' T12 EE/EEMAG-8'	old wrap	2	140	0.3	2L4' T8 28w/ELEE HI/NEW-8'	new wrap	2	64	0.1	0.2	432	2,840
IN	Interior	1688	Wayne Valley-High School	Office 134C	1	2L4' T12 EE/EEMAG	old wrap	2	70	0.1	1L4' T8 28w/ELEE HI/NEW	new wrap	2	33	0.1	0.1	210	2,840
IN	Interior	1689	Wayne Valley-High School	Storage 134	1	2L4' T12 EE/EEMAG	old wrap	1	70	0.1	1L4' T8 28w/ELEE HI/NEW	new wrap	1	33	0.0	0.0	19	500
IN	Interior	1690	Wayne Valley-High School	Office Open 135	1	4L4' T12 EE/EEMAG-8'	old wrap	3	140	0.4	2L4' T8 28w/ELEE HI/NEW-8'	new wrap	3	64	0.2	0.2	784	3,440
IN	Interior	1691	Wayne Valley-High School	Office Open 135	1	2L4' T12 EE/EEMAG	old wrap	3	70	0.2	1L4' T8 28w/ELEE HI/NEW	new wrap	3	33	0.1	0.1	382	3,440
IN	Interior	1692	Wayne Valley-High School	Office Open Exam Beds	1	2L4' T12 EE/EEMAG	old wrap	6	70	0.4	1L4' T8 28w/ELEE HI/NEW	new wrap	6	33	0.2	0.2	764	3,440
IN	Interior	1693	Wayne Valley-High School	Office Nurse	1	4L4' T12 EE/EEMAG-8'	old wrap	2	140	0.3	2L4' T8 28w/ELEE HI/NEW-8'	new wrap	2	64	0.1	0.2	432	2,840
IN	Interior	1694	Wayne Valley-High School	Storage Nurse	1	300W INCANDESCENT	dome	1	300	0.3	2L2' T8 15w/ELEE LO/NEW	new wrap	1	24	0.0	0.3	138	500
IN	Interior	1695	Wayne Valley-High School	Bath Nurse	1	2L4' T12 EE/EEMAG	trof acr	1	70	0.1	2L4' T8 28w/ELEE HI/RFL	rlrb rfl	1	64	0.1	0.0	22	3,640
IN	Interior	1696	Wayne Valley-High School	Bath Nurse	1	2L2' T12 STD/STD	vanity	1	56	0.1	2L2' T8 15w/ELEE LO/NEW	new vanity	1	24	0.0	0.0	116	3,640
IN	Interior	1697	Wayne Valley-High School	Classroom 136	1	4L4' T12 EE/EEMAG-8'	old wrap	8	140	1.1	2L4' T8 28w/ELEE HI/NEW-8'	new wrap	8	64	0.5	0.6	1,727	2,840
IN	Interior	1698	Wayne Valley-High School	Classroom 137	1	4L4' T12 EE/EEMAG-8'	old wrap	6	140	0.8	2L4' T8 28w/ELEE HI/NEW-8'	new wrap	6	64	0.4	0.5	1,295	2,840
IN	Interior	1699	Wayne Valley-High School	Classroom 137	1	2L4' T12 EE/EEMAG	old wrap	3	70	0.2	1L4' T8 28w/ELEE HI/NEW	new wrap	3	33	0.1	0.1	315	2,840
IN	Interior	1700	Wayne Valley-High School	Classroom 138	1	4L4' T12 EE/EEMAG-8'	old wrap	6	140	0.8	2L4' T8 28w/ELEE HI/NEW-8'	new wrap	6	64	0.4	0.5	1,295	2,840
IN	Interior	1701	Wayne Valley-High School	Classroom 138	1	2L4' T12 EE/EEMAG	old wrap	3	70	0.2	1L4' T8 28w/ELEE HI/NEW	new wrap	3	33	0.1	0.1	315	2,840
IN	Interior	1702	Wayne Valley-High School	Classroom 139	1	4L4' T12 EE/EEMAG-8'	old wrap	6	140	0.8	2L4' T8 28w/ELEE HI/NEW-8'	new wrap	6	64	0.4	0.5	1,295	2,840
IN	Interior	1703	Wayne Valley-High School	Classroom 139	1	2L4' T12 EE/EEMAG	old wrap	3	70	0.2	1L4' T8 28w/ELEE HI/NEW	new wrap	3	33	0.1	0.1	315	2,840
IN	Interior	1704	Wayne Valley-High School	Classroom 140	1	4L4' T12 EE/EEMAG-8'	old wrap	6	140	0.8	2L4' T8 28w/ELEE HI/NEW-8'	new wrap	6	64	0.4	0.5	1,295	2,840
IN	Interior	1705	Wayne Valley-High School	Classroom 140	1	2L4' T12 EE/EEMAG	old wrap	3	70	0.2	1L4' T8 28w/ELEE HI/NEW	new wrap	3	33	0.1	0.1	315	2,840
IN	Interior	1706	Wayne Valley-High School	Hall 137 To Stair 5	1	1L4' T12 EE/EEMAG	old wrap narrow	30	40	1.2	1L4' T8 28w/ELEE HI/NEW	new wrap	30	33	1.0	0.2	764	3,640
IN	Interior	1707	Wayne Valley-High School	Hall 137 To Stair 5	1	2L4' T12 EE/EEMAG	strip	2	70	0.1	1L4' T8 28w/ELEE/STRIP KIT	rlrb strip kit	2	24	0.0	0.1	335	3,640
IN	Interior	1708	Wayne Valley-High School	Classroom 140	1	4L4' T12 EE/EEMAG-8'	old wrap	9	140	1.3	2L4' T8 28w/ELEE HI/NEW-8'	new wrap	9	64	0.6	0.7	1,943	2,840
IN	Interior	1709	Wayne Valley-High School	Classroom 140	1	2L4' T12 EE/EEMAG	old wrap	3	70	0.2	1L4' T8 28w/ELEE HI/NEW	new wrap	3	33	0.1	0.1	315	2,840
IN	Interior	1710	Wayne Valley-High School	Closet Clean	1	150W INCANDESCENT	dome	1	150	0.2	2L2' T8 15w/ELEE LO/NEW	new wrap	1	24	0.0	0.1	63	500
IN	Interior	1711	Wayne Valley-High School	Bath Girls	1	4L4' T8 32w/EL-8'	wrap	1	112	0.1	2L4' T8 28w/ELEE HI/NEW-8'	new wrap	1	64	0.1	0.0	175	3,640
IN	Interior	1712	Wayne Valley-High School	Bath Girls	1	2L4' T8 32w/EL	wrap	1	60	0.1	1L4' T8 28w/ELEE HI/NEW	new wrap	1	33	0.0	0.0	98	3,640
IN	Interior	1713	Wayne Valley-High School	Kitchen 141 Serving Area	1	4L4' T12 EE/EEMAG-8'	trof acr 1' wide	6	140	0.8	4L4' T8 28w/ELEE LO-8'	rlrb	6	83	0.5	0.3	971	2,840
IN	Interior	1714	Wayne Valley-High School	Kitchen 141 Serving Area	1	4L4' T12 EE/EEMAG-8'	trof acr 1' wide	2	140	0.3	4L4' T8 28w/ELEE LO-8'	rlrb	2	83	0.2	0.1	324	2,840
IN	Interior	1715	Wayne Valley-High School	Kitchen 141 Prep Area	1	4L4' T12 EE/EEMAG-8'	trof acr 1' wide	4	140	0.6	4L4' T8 28w/ELEE LO-8'	rlrb	4	83	0.3	0.2	648	2,840
IN	Interior	1716	Wayne Valley-High School	Kitchen 141 Wash Area	1	4L4' T12 EE/EEMAG-8'	trof acr 1' wide	2	140	0.3	4L4' T8 28w/ELEE LO-8'	rlrb	2	83	0.2	0.1	324	2,840
IN	Interior	1717	Wayne Valley-High School	Kitchen Grease Hood	1	60W INCANDESCENT	jar	2	60	0.1	23W COMPACT SI/29712/CF23	screw in	2	23	0.0	0.1	210	2,840
IN	Interior	1718	Wayne Valley-High School	Closet Clean	1	100W INCANDESCENT	dome	1	100	0.1	23W COMPACT SI/29712/CF23	screw in	1	23	0.0	0.1	39	500
IN	Interior	1719	Wayne Valley-High School	Bath 141Bt	1	2L4' T8 32w/EL	old wrap	2	60	0.1	1L4' T8 28w/ELEE HI/NEW	new wrap	2	33	0.1	0.1	197	3,640
IN	Interior	1720	Wayne Valley-High School	Bath 141Bt	1	4L4' T12 EE/EEMAG-8'	old wrap	1	140	0.1	2L4' T8 28w/ELEE HI/NEW-8'	new wrap	1	64	0.1	0.1	277	3,640
IN	Interior	1721	Wayne Valley-High School	Cafeteria 142	1	4L4' T12 EE/EEMAG-8'	old wrap	15	140	2.1	2L4' T8 28w/ELEE HI/NEW-8'	new wrap	15	64	1.0	1.1	3,922	3,440
IN	Interior	1722	Wayne Valley-High School	Cafeteria 142	1	2L4' T12 EE/EEMAG	old wrap	6	70	0.4	1L4' T8 28w/ELEE HI/NEW	new wrap	6	33	0.2	0.2	764	3,440
IN	Interior	1723	Wayne Valley-High School	Classroom 143	1	4L4' T12 EE/EEMAG-8'	old wrap	9	140	1.3	2L4' T8 28w/ELEE HI/NEW-8'	new wrap	9	64	0.6	0.7	1,943	2,840
IN	Interior	1724	Wayne Valley-High School	Classroom 143	1	2L4' T12 EE/EEMAG	old wrap	2	70	0.1	1L4' T8 28w/ELEE HI/NEW	new wrap	2	33	0.1	0.1	210	2,840
IN	Interior	1725	Wayne Valley-High School	Hall By Courtyard	1	1L4' T12 EE/EEMAG	old wrap narrow	11	40	0.4	1L4' T8 28w/ELEE HI/NEW	new wrap	11	33	0.4	0.1	280	3,640
IN	Interior	1726	Wayne Valley-High School	Locker 133Tm	1	1L4' T12 EE/EEMAG	old wrap narrow	2	40	0.1	1L4' T8 28w/ELEE HI/NEW	new wrap	2	33	0.1	0.0	51	3,640
IN	Interior	1727	Wayne Valley-High School	Locker 133Tm	1	2L4' T8 32w/EL	vapor tight	1	60	0.1	2L4' T8 28w/ELEE LO	rlrb	1	42	0.0	0.0	66	3,640
IN	Interior	1728	Wayne Valley-High School	Hall To Boiler Room	1	32W COMPACT SCREWIN	dome	1	32	0.0	NO RETRO	no change needed		32	0.0			3,640

In or Out	ECM	Line	Building Name	Location	Fl	Pre Fixture Description	Pre Fixture Style	Pre Qty	Pre Watts	Pre kW	Post Fixture Description	Post Fixture Style	Post Qty	Post Watts	Post kW	kW Saved	kWH Saved	Annual Hours
IN	Interior	1729	Wayne Valley-High School	Mechanical Boiler	1	150W INCANDESCENT	dome	8	150	1.2	2L2' T8 15w/ELEE LO/NEW	new wrap	8	24	0.2	1.0	504	500
IN	Interior	1730	Wayne Valley-High School	Mechanical Boiler	1	2L4' T12 EE/EEMAG	strip reflector	3	70	0.2	2L4' T8 28w/ELEE LO	rlrb	3	42	0.1	0.1	42	500
IN	Interior	1731	Wayne Valley-High School	Locker 133Tm	1	2L4' T8 32w/EL	vapor tight	17	60	1.0	2L4' T8 28w/ELEE LO	rlrb	17	42	0.7	0.3	1,114	3,640
IN	Interior	1732	Wayne Valley-High School	Locker Bathroom	1	4L4' T8 32w/EL-8'	wrap	2	112	0.2	2L4' T8 28w/ELEE HI/NEW-8'	new wrap	2	64	0.1	0.1	349	3,640
IN	Interior	1733	Wayne Valley-High School	Locker Showers	1	2x13W COMPACT HARDV	square recessed	5	30	0.2	NO RETRO	no change needed		30	0.2			3,640
IN	Interior	1734	Wayne Valley-High School	Locker Stand Up Lockers	1	2L4' T12 U EE/EEMAG	trof acr	6	70	0.4	2L2' T8 15w/ELEE HI/RFL	rlrb rfl	6	33	0.2	0.2	808	3,640
IN	Interior	1735	Wayne Valley-High School	Storage Equipment	1	2L4' T12 U EE/EEMAG	trof acr	4	70	0.3	2L2' T8 15w/ELEE HI/RFL	rlrb rfl	4	33	0.1	0.1	74	500
IN	Interior	1736	Wayne Valley-High School	Storage 1	1	2L4' T12 EE/EEMAG	old wrap	4	70	0.3	1L4' T8 28w/ELEE HI/NEW	new wrap	4	33	0.1	0.1	74	500
IN	Interior	1737	Wayne Valley-High School	Storage 2	1	2L4' T12 EE/EEMAG	old wrap	4	70	0.3	1L4' T8 28w/ELEE HI/NEW	new wrap	4	33	0.1	0.1	74	500
IN	Interior	1738	Wayne Valley-High School	Stair To Gym	s	1L4' T12 EE/EEMAG	old wrap narrow	2	40	0.1	1L4' T8 28w/ELEE HI/NEW	new wrap	2	33	0.1	0.0	51	3,640
IN	Interior	1739	Wayne Valley-High School	Stair To Gym	s	2L4' T8 32w/EL	vapor tight	1	60	0.1	2L4' T8 28w/ELEE LO	rlrb	1	42	0.0	0.0	66	3,640
IN	Interior	1740	Wayne Valley-High School	Storage By Boiler	1	2L4' T12 EE/EEMAG-8'	old wrap	4	70	0.3	2L4' T8 28w/ELEE LO/NEW-8'	new wrap	4	42	0.2	0.1	56	500
IN	Interior	1741	Wayne Valley-High School	Locker 133Bl Boys	1	1L4' T12 EE/EEMAG	old wrap narrow	11	40	0.4	1L4' T8 28w/ELEE HI/NEW	new wrap	11	33	0.4	0.1	280	3,640
IN	Interior	1742	Wayne Valley-High School	Locker 133Bl Boys	1	60W INCANDESCENT	square recessed	6	60	0.4	11W COMPACT SI/29708/CF11	screw in	6	11	0.1	0.3	1,070	3,640
IN	Interior	1743	Wayne Valley-High School	Locker Bath	1	2L4' T8 32w/EL	trof acr	2	60	0.1	2L4' T8 28w/ELEE LO	rlrb	2	42	0.1	0.0	131	3,640
IN	Interior	1744	Wayne Valley-High School	Office Coach	1	4L4' T12 EE/EEMAG-8'	old wrap	1	140	0.1	2L4' T8 28w/ELEE HI/NEW-8'	new wrap	1	64	0.1	0.1	216	2,840
IN	Interior	1745	Wayne Valley-High School	Bath Coach	1	1L2' T8 17w/EL	vanity	1	17	0.0	2L2' T8 15w/ELEE LO/NEW	new vanity	1	24	0.0	0.0	-25	3,640
IN	Interior	1746	Wayne Valley-High School	Bath Coach	1	2x13W COMPACT HARDV	can rec 9"	1	30	0.0	NO RETRO	no change needed		30	0.0			3,640
IN	Interior	1747	Wayne Valley-High School	Storage By Showers	1	1L4' T12 EE/EEMAG	old wrap narrow	2	40	0.1	1L4' T8 28w/ELEE HI/NEW	new wrap	2	33	0.1	0.0	7	500
IN	Interior	1748	Wayne Valley-High School	Locker 133Bl Girls	1	1L4' T12 EE/EEMAG	old wrap narrow	11	40	0.4	1L4' T8 28w/ELEE HI/NEW	new wrap	11	33	0.4	0.1	280	3,640
IN	Interior	1749	Wayne Valley-High School	Locker 133Bl Girls	1	60W INCANDESCENT	square recessed	6	60	0.4	11W COMPACT SI/29708/CF11	screw in	6	11	0.1	0.3	1,070	3,640
IN	Interior	1750	Wayne Valley-High School	Locker Bath	1	2L4' T8 32w/EL	trof acr	2	60	0.1	2L4' T8 28w/ELEE LO	rlrb	2	42	0.1	0.0	131	3,640
IN	Interior	1751	Wayne Valley-High School	Office Coach	1	4L4' T12 EE/EEMAG-8'	old wrap	1	140	0.1	2L4' T8 28w/ELEE HI/NEW-8'	new wrap	1	64	0.1	0.1	216	2,840
IN	Interior	1752	Wayne Valley-High School	Bath Coach	1	1L2' T8 17w/EL	vanity	1	17	0.0	2L2' T8 15w/ELEE LO/NEW	new vanity	1	24	0.0	0.0	-25	3,640
IN	Interior	1753	Wayne Valley-High School	Bath Coach	1	2x13W COMPACT HARDV	can rec 9"	1	30	0.0	NO RETRO	no change needed		30	0.0			3,640
IN	Interior	1754	Wayne Valley-High School	Gym Main	1	400W METAL HALIDE	high bay	74	455	33.7	222 WATT LED/NEW	new LED hibay polylens	74	222	16.4	17.2	59,312	3,440
IN	Interior	1755	Wayne Valley-High School	Storage Gym Main 1	1	23W COMPACT HARDWI	dome	1	24	0.0	NO RETRO	no change needed		24	0.0			500
IN	Interior	1756	Wayne Valley-High School	Storage Gym Main 2	1	32W COMPACT SCREWI	dome	3	32	0.1	NO RETRO	no change needed		32	0.1			500
IN	Interior	1757	Wayne Valley-High School	Storage Gym Main 3	1	32W COMPACT SCREWI	dome	2	32	0.1	NO RETRO	no change needed		32	0.1			500
IN	Interior	1758	Wayne Valley-High School	Hall 167 To 176	1	2L4' T8 32w/EL	trof acr	20	60	1.2	2L4' T8 28w/ELEE LO	rlrb	20	42	0.8	0.4	917	2,548
IN	Interior	1759	Wayne Valley-High School	Hall 167 To 176	1	4L4' T8 32w/EL	decorative	5	112	0.6	4L4' T8 28w/ELEE LO	rlrb	5	83	0.4	0.1	369	2,548
IN	Interior	1760	Wayne Valley-High School	Cafeteria 167 Multi Purpose	1	250W METAL HALIDE	indirect	11	295	3.2	NO RETRO	no change		295	3.2			3,440
IN	Interior	1761	Wayne Valley-High School	Office Open 167 Multi Purpose	1	32W COMPACT SCREWI	can rec 6"	5	32	0.2	NO RETRO	no change needed		32	0.2			3,440
IN	Interior	1762	Wayne Valley-High School	Classroom 168	1	4L4' T8 32w/EL	trof para dbl switc	9	112	1.0	2L4' T8 28w/ELEE HI/RFL	rlrb RT8 kit	9	64	0.6	0.4	859	1,988
IN	Interior	1763	Wayne Valley-High School	Classroom 169	1	4L4' T8 32w/EL	trof para dbl switc	9	112	1.0	2L4' T8 28w/ELEE HI/RFL	rlrb RT8 kit	9	64	0.6	0.4	859	1,988
IN	Interior	1764	Wayne Valley-High School	Classroom 170	1	4L4' T8 32w/EL	trof para dbl switc	9	112	1.0	2L4' T8 28w/ELEE HI/RFL	rlrb RT8 kit	9	64	0.6	0.4	859	1,988
IN	Interior	1765	Wayne Valley-High School	Classroom 171	1	4L4' T8 32w/EL	trof para dbl switc	9	112	1.0	2L4' T8 28w/ELEE HI/RFL	rlrb RT8 kit	9	64	0.6	0.4	859	1,988
IN	Interior	1766	Wayne Valley-High School	Classroom 172	1	4L4' T8 32w/EL	trof para dbl switc	9	112	1.0	2L4' T8 28w/ELEE HI/RFL	rlrb RT8 kit	9	64	0.6	0.4	859	1,988
IN	Interior	1767	Wayne Valley-High School	Bath 171 Br	1	2L2' F40 BIAX/EL	trof acr	1	72	0.1	2L2' F40BIAX/EL28W	rlrb	1	63	0.1	0.0	33	3,640
IN	Interior	1768	Wayne Valley-High School	Bath 171 Br	1	2L4' T8 32w/EL	trof acr	3	60	0.2	2L4' T8 28w/ELEE LO	rlrb	3	42	0.1	0.1	197	3,640
IN	Interior	1769	Wayne Valley-High School	Closet 171Jc	1	2L4' T8 32w/EL	wrap	1	60	0.1	1L4' T8 28w/ELEE HI/NEW	new wrap	1	33	0.0	0.0	14	500
IN	Interior	1770	Wayne Valley-High School	Bath 171Gr	1	2L2' F40 BIAX/EL	trof acr	1	72	0.1	2L2' F40BIAX/EL28W	rlrb	1	63	0.1	0.0	33	3,640
IN	Interior	1771	Wayne Valley-High School	Bath 171Gr	1	2L4' T8 32w/EL	trof acr	3	60	0.2	2L4' T8 28w/ELEE LO	rlrb	3	42	0.1	0.1	197	3,640
IN	Interior	1772	Wayne Valley-High School	Storage 174Gs	1	2L4' T8 32w/EL	wrap	3	60	0.2	1L4' T8 28w/ELEE HI/NEW	new wrap	3	33	0.1	0.1	41	500
IN	Interior	1773	Wayne Valley-High School	Mechanical 173Me	1	2L4' T8 32w/EL	wrap	3	60	0.2	1L4' T8 28w/ELEE HI/NEW	new wrap	3	33	0.1	0.1	41	500
IN	Interior	1774	Wayne Valley-High School	Classroom 176	1	6L4' T8 32w/EL-8'	indirect dbl switch	3	180	0.5	6L4' T8 28w/ELEE LO-8'	rlrb	3	126	0.4	0.2	322	1,988
IN	Interior	1775	Wayne Valley-High School	Classroom 176	1	9L4' T8 32w/EL-12'	indirect dbl switch	6	264	1.6	9L4' T8 28w/ELEE LO-12'	rlrb	6	189	1.1	0.5	895	1,988
IN	Interior	1776	Wayne Valley-High School	Classroom 175	1	6L4' T8 32w/EL-8'	indirect dbl switch	3	180	0.5	6L4' T8 28w/ELEE LO-8'	rlrb	3	126	0.4	0.2	322	1,988

In or Out	ECM	Line	Building Name	Location	Fl	Pre Fixture Description	Pre Fixture Style	Pre Qty	Pre Watts	Pre kW	Post Fixture Description	Post Fixture Style	Post Qty	Post Watts	Post kW	kW Saved	kWH Saved	Annual Hours
IN	Interior	1777	Wayne Valley-High School	Classroom 175	1	9L4' T8 32w/EL-12'	indirect dbl switch	6	264	1.6	9L4' T8 28w/ELEE LO-12'	rlrb	6	189	1.1	0.5	895	1,988
IN	Interior	1778	Wayne Valley-High School	Hall 175 To Fire Doors	1	2L4' T8 32w/EL	trof acr	9	60	0.5	2L4' T8 28w/ELEE LO	rlrb	9	42	0.4	0.2	590	3,640
IN	Interior	1779	Wayne Valley-High School	Hall 162 To 146	1	2L4' T8 32w/EL	trof acr	19	60	1.1	2L4' T8 28w/ELEE LO	rlrb	19	42	0.8	0.3	1,245	3,640
IN	Interior	1780	Wayne Valley-High School	Hall 162 To 146	1	2L4' T8 32w/EL	trof acr	11	60	0.7	2L4' T8 28w/ELEE LO	rlrb	11	42	0.5	0.2	721	3,640
IN	Interior	1781	Wayne Valley-High School	Hall 163 To 165	1	2L4' T8 32w/EL	trof acr	8	60	0.5	2L4' T8 28w/ELEE LO	rlrb	8	42	0.3	0.1	524	3,640
IN	Interior	1782	Wayne Valley-High School	Hall 163 To 165	1	2L4' T8 32w/EL	trof acr	4	60	0.2	2L4' T8 28w/ELEE LO	rlrb	4	42	0.2	0.1	262	3,640
IN	Interior	1783	Wayne Valley-High School	Classroom 163	1	4L4' T12 EE/EEMAG-8'	old wrap	9	140	1.3	2L4' T8 28w/ELEE HI/NEW-8'	new wrap	9	64	0.6	0.7	1,943	2,840
IN	Interior	1784	Wayne Valley-High School	Classroom 163	1	2L4' T12 EE/EEMAG	old wrap	3	70	0.2	1L4' T8 28w/ELEE HI/NEW	new wrap	3	33	0.1	0.1	315	2,840
IN	Interior	1785	Wayne Valley-High School	Classroom 164	1	4L4' T12 EE/EEMAG-8'	old wrap	9	140	1.3	2L4' T8 28w/ELEE HI/NEW-8'	new wrap	9	64	0.6	0.7	1,943	2,840
IN	Interior	1786	Wayne Valley-High School	Classroom 164	1	2L4' T12 EE/EEMAG	old wrap	3	70	0.2	1L4' T8 28w/ELEE HI/NEW	new wrap	3	33	0.1	0.1	315	2,840
IN	Interior	1787	Wayne Valley-High School	Classroom 165	1	4L4' T12 EE/EEMAG-8'	old wrap	9	140	1.3	2L4' T8 28w/ELEE HI/NEW-8'	new wrap	9	64	0.6	0.7	1,943	2,840
IN	Interior	1788	Wayne Valley-High School	Classroom 165	1	2L4' T12 EE/EEMAG	old wrap	3	70	0.2	1L4' T8 28w/ELEE HI/NEW	new wrap	3	33	0.1	0.1	315	2,840
IN	Interior	1789	Wayne Valley-High School	Classroom 166	1	4L4' T12 EE/EEMAG-8'	old wrap	9	140	1.3	2L4' T8 28w/ELEE HI/NEW-8'	new wrap	9	64	0.6	0.7	1,943	2,840
IN	Interior	1790	Wayne Valley-High School	Classroom 166	1	2L4' T12 EE/EEMAG	old wrap	3	70	0.2	1L4' T8 28w/ELEE HI/NEW	new wrap	3	33	0.1	0.1	315	2,840
IN	Interior	1791	Wayne Valley-High School	Hall By 167	1	2L4' T8 32w/EL	trof acr	3	60	0.2	2L4' T8 28w/ELEE LO	rlrb	3	42	0.1	0.1	138	2,548
IN	Interior	1792	Wayne Valley-High School	Closet 167	1	2L4' T8 32w/EL	wrap	3	60	0.2	1L4' T8 28w/ELEE HI/NEW	new wrap	3	33	0.1	0.1	41	500
IN	Interior	1793	Wayne Valley-High School	Classroom 144	1	4L4' T12 EE/EEMAG-8'	old wrap	10	140	1.4	2L4' T8 28w/ELEE HI/NEW-8'	new wrap	10	64	0.6	0.8	2,158	2,840
IN	Interior	1794	Wayne Valley-High School	Office 144	1	4L4' T12 EE/EEMAG-8'	old wrap	2	140	0.3	2L4' T8 28w/ELEE HI/NEW-8'	new wrap	2	64	0.1	0.2	432	2,840
IN	Interior	1795	Wayne Valley-High School	Classroom 149	1	4L4' T12 EE/EEMAG-8'	old wrap	10	140	1.4	2L4' T8 28w/ELEE HI/NEW-8'	new wrap	10	64	0.6	0.8	2,158	2,840
IN	Interior	1796	Wayne Valley-High School	Office 149	1	4L4' T12 EE/EEMAG-8'	old wrap	2	140	0.3	2L4' T8 28w/ELEE HI/NEW-8'	new wrap	2	64	0.1	0.2	432	2,840
IN	Interior	1797	Wayne Valley-High School	Classroom 145	1	4L4' T12 EE/EEMAG-8'	old wrap	10	140	1.4	2L4' T8 28w/ELEE HI/NEW-8'	new wrap	10	64	0.6	0.8	2,158	2,840
IN	Interior	1798	Wayne Valley-High School	Classroom 150	1	4L4' T12 EE/EEMAG-8'	old wrap	10	140	1.4	2L4' T8 28w/ELEE HI/NEW-8'	new wrap	10	64	0.6	0.8	2,158	2,840
IN	Interior	1799	Wayne Valley-High School	Classroom 151	1	4L4' T12 EE/EEMAG-8'	old wrap	10	140	1.4	2L4' T8 28w/ELEE HI/NEW-8'	new wrap	10	64	0.6	0.8	2,158	2,840
IN	Interior	1800	Wayne Valley-High School	Office 151	1	4L4' T12 EE/EEMAG-8'	old wrap	2	140	0.3	2L4' T8 28w/ELEE HI/NEW-8'	new wrap	2	64	0.1	0.2	432	2,840
IN	Interior	1801	Wayne Valley-High School	Classroom 152	1	4L4' T12 EE/EEMAG-8'	old wrap	10	140	1.4	2L4' T8 28w/ELEE HI/NEW-8'	new wrap	10	64	0.6	0.8	2,158	2,840
IN	Interior	1802	Wayne Valley-High School	Gym 146	1	4L4' T12 EE/EEMAG	old wrap	14	140	2.0	2L4' T8 28w/ELEE HI/NEW	new wrap wide	14	64	0.9	1.1	3,660	3,440
IN	Interior	1803	Wayne Valley-High School	Hall 144 To 147	1	2L4' T8 32w/EL	trof acr	22	60	1.3	2L4' T8 28w/ELEE LO	rlrb	22	42	0.9	0.4	1,441	3,640
IN	Interior	1804	Wayne Valley-High School	Closet Clean	1	150W INCANDESCENT	keyless	1	150	0.2	23W COMPACT SI/29712/CF23	screw in	1	23	0.0	0.1	64	500
IN	Interior	1805	Wayne Valley-High School	Classroom 153	1	4L4' T12 EE/EEMAG-8'	old wrap	12	140	1.7	2L4' T8 28w/ELEE HI/NEW-8'	new wrap	12	64	0.8	0.9	2,590	2,840
IN	Interior	1806	Wayne Valley-High School	Classroom 153	1	2L4' T12 EE/EEMAG	old wrap	3	70	0.2	1L4' T8 28w/ELEE HI/NEW	new wrap	3	33	0.1	0.1	315	2,840
IN	Interior	1807	Wayne Valley-High School	Office 154	1	2L4' T8 32w/EL	old wrap	2	60	0.1	1L4' T8 28w/ELEE HI/NEW	new wrap	2	33	0.1	0.1	153	2,840
IN	Interior	1808	Wayne Valley-High School	Office 155	1	2L4' T8 32w/EL	old wrap	2	60	0.1	1L4' T8 28w/ELEE HI/NEW	new wrap	2	33	0.1	0.1	153	2,840
IN	Interior	1809	Wayne Valley-High School	Office 147	1	3L4' T8 32w/EL	trof acr	3	88	0.3	3L4' T8 28w/ELEE LO	rlrb	3	63	0.2	0.1	213	2,840
IN	Interior	1810	Wayne Valley-High School	Office 147	1	4L4' T12 EE/EEMAG	box acrylic	4	140	0.6	2L4' T8 28w/ELEE HI/RFL	rlrb rfl	4	64	0.3	0.3	863	2,840
IN	Interior	1811	Wayne Valley-High School	Storage 147	1	2L4' T12 EE/EEMAG	old wrap	1	70	0.1	1L4' T8 28w/ELEE HI/NEW	new wrap	1	33	0.0	0.0	19	500
IN	Interior	1812	Wayne Valley-High School	Storage Books	1	3L4' T8 32w/EL	trof acr	6	88	0.5	3L4' T8 28w/ELEE LO	rlrb	6	63	0.4	0.2	75	500
IN	Interior	1813	Wayne Valley-High School	Mechanical Electrical	1	100W INCANDESCENT	dome	1	100	0.1	23W COMPACT SI/29712/CF23	screw in	1	23	0.0	0.1	39	500
IN	Interior	1814	Wayne Valley-High School	Hall 147 To 157Bt	1	2L4' T8 32w/EL	trof acr	11	60	0.7	2L4' T8 28w/ELEE LO	rlrb	11	42	0.5	0.2	721	3,640
IN	Interior	1815	Wayne Valley-High School	Library	1	23W COMPACT HARDWI	can rec 9"	12	24	0.3	NO RETRO	no change needed		24	0.3			2,840
IN	Interior	1816	Wayne Valley-High School	Library	1	3L4' T8 32w/EL	trof acr	27	88	2.4	2L4' T8 28w/ELEE HI/RFL	rlrb RT8 kit	27	64	1.7	0.6	1,840	2,840
IN	Interior	1817	Wayne Valley-High School	Library	1	4L4' T12 EE/EEMAG	trof acr	110	140	15.4	2L4' T8 28w/ELEE HI/RFL	rlrb RT8 kit	110	64	7.0	8.4	23,742	2,840
IN	Interior	1818	Wayne Valley-High School	Library Auditorium Area	1	3L4' T8 32w/EL	trof acr	20	88	1.8	2L4' T8 28w/ELEE HI/RFL	rlrb RT8 kit	20	64	1.3	0.5	1,363	2,840
IN	Interior	1819	Wayne Valley-High School	Library Auditorium Area	1	150W INCANDESCENT	can rec 12"	8	150	1.2	22 WATT LED/KIT	Spectrum Lighting can re	8	22	0.2	1.0	2,908	2,840
IN	Interior	1820	Wayne Valley-High School	Storage It	1	3L4' T8 32w/EL	trof acr	4	88	0.4	3L4' T8 28w/ELEE LO	rlrb	4	63	0.3	0.1	50	500
IN	Interior	1821	Wayne Valley-High School	Office Computer Learning Cente	1	3L4' T8 32w/EL	trof acr	6	88	0.5	3L4' T8 28w/ELEE LO	rlrb	6	63	0.4	0.2	426	2,840
IN	Interior	1822	Wayne Valley-High School	Office Librarian	1	4L4' T8 32w/EL	trof acr	4	112	0.4	2L4' T8 28w/ELEE HI/RFL	rlrb rfl	4	64	0.3	0.2	545	2,840
IN	Interior	1823	Wayne Valley-High School	Storage Audio Visual	1	4L4' T8 32w/EL	trof acr	4	112	0.4	2L4' T8 28w/ELEE HI/RFL	rlrb rfl	4	64	0.3	0.2	96	500
IN	Interior	1824	Wayne Valley-High School	Classroom 156	1	4L4' T12 EE/EEMAG-8'	old wrap	7	140	1.0	2L4' T8 28w/ELEE HI/NEW-8'	new wrap	7	64	0.4	0.5	1,511	2,840

In or Out	ECM	Line	Building Name	Location	Fl	Pre Fixture Description	Pre Fixture Style	Pre Qty	Pre Watts	Pre kW	Post Fixture Description	Post Fixture Style	Post Qty	Post Watts	Post kW	kW Saved	kWH Saved	Annual Hours
IN	Interior	1825	Wayne Valley-High School	Classroom 156	1	2L4' T12 EE/EEMAG	old wrap	3	70	0.2	1L4' T8 28w/ELEE HI/NEW	new wrap	3	33	0.1	0.1	315	2,840
IN	Interior	1826	Wayne Valley-High School	Office 156	1	4L4' T12 EE/EEMAG-8'	old wrap	5	140	0.7	2L4' T8 28w/ELEE HI/NEW-8'	new wrap	5	64	0.3	0.4	1,079	2,840
IN	Interior	1827	Wayne Valley-High School	Classroom 157	1	4L4' T12 EE/EEMAG-8'	old wrap	9	140	1.3	2L4' T8 28w/ELEE HI/NEW-8'	new wrap	9	64	0.6	0.7	1,943	2,840
IN	Interior	1828	Wayne Valley-High School	Classroom 157	1	2L4' T12 EE/EEMAG	old wrap	3	70	0.2	1L4' T8 28w/ELEE HI/NEW	new wrap	3	33	0.1	0.1	315	2,840
IN	Interior	1829	Wayne Valley-High School	Bath 157Bt	1	2L4' T12 EE/EEMAG	old wrap	4	70	0.3	1L4' T8 28w/ELEE HI/NEW	new wrap	4	33	0.1	0.1	539	3,640
IN	Interior	1830	Wayne Valley-High School	Closet Clean	1	100W INCANDESCENT	keyless	1	100	0.1	23W COMPACT SI/29712/CF23	screw in	1	23	0.0	0.1	39	500
IN	Interior	1831	Wayne Valley-High School	Bath 157Gt	1	2L4' T12 EE/EEMAG	old wrap	4	70	0.3	1L4' T8 28w/ELEE HI/NEW	new wrap	4	33	0.1	0.1	539	3,640
IN	Interior	1832	Wayne Valley-High School	Classroom 158	1	4L4' T12 EE/EEMAG-8'	old wrap	12	140	1.7	2L4' T8 28w/ELEE HI/NEW-8'	new wrap	12	64	0.8	0.9	2,590	2,840
IN	Interior	1833	Wayne Valley-High School	Classroom 159	1	6L4' T8 32w/EL-8'	indirect	10	180	1.8	6L4' T8 28w/ELEE LO-8'	rlrb	10	126	1.3	0.5	1,534	2,840
IN	Interior	1834	Wayne Valley-High School	Office 159	1	4L4' T12 EE/EEMAG-8'	old wrap	2	140	0.3	2L4' T8 28w/ELEE HI/NEW-8'	new wrap	2	64	0.1	0.2	432	2,840
IN	Interior	1835	Wayne Valley-High School	Classroom 160	1	4L4' T12 EE/EEMAG-8'	old wrap	10	140	1.4	2L4' T8 28w/ELEE HI/NEW-8'	new wrap	10	64	0.6	0.8	2,158	2,840
IN	Interior	1836	Wayne Valley-High School	Classroom 161	1	4L4' T12 EE/EEMAG-8'	old wrap	9	140	1.3	2L4' T8 28w/ELEE HI/NEW-8'	new wrap	9	64	0.6	0.7	1,943	2,840
IN	Interior	1837	Wayne Valley-High School	Lounge 162	1	4L4' T12 EE/EEMAG-8'	old wrap	3	140	0.4	2L4' T8 28w/ELEE HI/NEW-8'	new wrap	3	64	0.2	0.2	575	2,520
IN	Interior	1838	Wayne Valley-High School	Classroom 162	1	4L4' T12 EE/EEMAG-8'	old wrap	9	140	1.3	2L4' T8 28w/ELEE HI/NEW-8'	new wrap	9	64	0.6	0.7	1,943	2,840
IN	Exterior	1839	Wayne Valley-High School	Bldg Mt Fixture 1	ext	23W COMPACT HARDWI	cylinder wall mt.	1	24	0.0	NO RETRO	no change needed		24	0.0			4,380
IN	Exterior	1840	Wayne Valley-High School	Bldg Mt Fixture 2	ext	2x18W COMPACT HARDV	wallpack	8	38	0.3	NO RETRO	no change needed		38	0.3			4,380
IN	Exterior	1841	Wayne Valley-High School	Bldg Mt Fixture 3	ext	70W HI PRESSURE SODI	wallpack	7	90	0.6	26 WATT LED/NEW	new LED wallpack	7	26	0.2	0.4	1,962	4,380
IN	Exterior	1842	Wayne Valley-High School	Bldg Mt Fixture 4	ext	50W HI PRESSURE SODI	wallpack	3	65	0.2	26 WATT LED/NEW	new LED wallpack	3	26	0.1	0.1	512	4,380
IN	Exterior	1843	Wayne Valley-High School	Bldg Mt Fixture 5	ext	13W COMPACT HARDWI	jar	2	15	0.0	NO RETRO	no change needed		15	0.0			4,380
IN	Exterior	1844	Wayne Valley-High School	Bldg Mt Fixture 6	ext	2x18W COMPACT HARDV	square recessed	24	38	0.9	NO RETRO	no change needed		38	0.9			4,380
IN	Exterior	1845	Wayne Valley-High School	Bldg Mt Fixture 7	ext	150W INCANDESCENT	can rec 12"	10	150	1.5	22 WATT LED/KIT	Spectrum Lighting can re	10	22	0.2	1.3	5,606	4,380
IN	Exterior	1846	Wayne Valley-High School	Bldg Mt Fixture 8	ext	250W HI PRESSURE SOD	wallpack	2	295	0.6	133 WATT LED/NEW	new LED wallpack	2	133	0.3	0.3	1,419	4,380
IN	Exterior	1847	Wayne Valley-High School	Bldg Mt Fixture 9	ext	90W INCANDESCENT	flood	3	90	0.3	25 WATT LED/NEW	new LED flood	3	25	0.1	0.2	854	4,380
IN	Exterior	1848	Wayne Valley-High School	Bldg Mt Fixture 10	ext	23W COMPACT HARDWI	square surface m	4	24	0.1	NO RETRO	no change needed		24	0.1			4,380
IN	Exterior	1849	Wayne Valley-High School	Bldg Mt Fixture 11	ext	400W METAL HALIDE	flood	2	455	0.9	231 WATT LED/NEW	new LED flood	2	231	0.5	0.4	1,962	4,380
IN	Exterior	1850	Wayne Valley-High School	Bldg Mt Fixture 12	ext	1000W METAL HALIDE	flood	1	1,075	1.1	231 WATT LED/NEW	new LED flood	1	231	0.2	0.8	3,697	4,380
IN	Exterior	1851	Wayne Valley-High School	Parking Lot Football Field (4)	ext	250W HI PRESSURE SOD	shoebox	8	295	2.4	133 WATT LED/NEW	new LED shoebox	8	133	1.1	1.3	5,676	4,380
IN	Exterior	1852	Wayne Valley-High School	Parking Lot Football Field	ext	250W HI PRESSURE SOD	shoebox	1	295	0.3	133 WATT LED/NEW	new LED shoebox	1	133	0.1	0.2	710	4,380
IN	Exterior	1853	Wayne Valley-High School	Parking Lot By School (5)	ext	250W MERCURY VAPOR	shoebox	10	290	2.9	133 WATT LED/NEW	new LED shoebox	10	133	1.3	1.6	6,877	4,380
IN	Exterior	1854	Wayne Valley-High School	Parking Lot By School	ext	400W METAL HALIDE	flood	7	455	3.2	231 WATT LED/NEW	new LED flood	7	231	1.6	1.6	6,868	4,380
IN	Exterior	1855	Wayne Valley-High School	Parking Lot By School (5)	ext	250W MERCURY VAPOR	shoebox	10	290	2.9	133 WATT LED/NEW	new LED shoebox	10	133	1.3	1.6	6,877	4,380
IN	Exterior	1856	Wayne Valley-High School	Parking Lot By School	ext	400W METAL HALIDE	flood	4	455	1.8	231 WATT LED/NEW	new LED flood	4	231	0.9	0.9	3,924	4,380
IN	Exterior	1857	Wayne Valley-High School	Driveway To Football Field (2)	ext	250W MERCURY VAPOR	shoebox	2	290	0.6	133 WATT LED/NEW	new LED shoebox	2	133	0.3	0.3	1,369	4,360
IN	Exterior	1858	Wayne Valley-High School	Parking Lot By Corner Of School	ext	250W MERCURY VAPOR	shoebox	1	290	0.3	133 WATT LED/NEW	new LED shoebox	1	133	0.1	0.2	688	4,380
IN	Exterior	1859	Wayne Valley-High School	Parking Lot By Corner Of School	ext	400W METAL HALIDE	flood	1	455	0.5	231 WATT LED/NEW	new LED flood	1	231	0.2	0.2	981	4,380
IN	Exterior	1860	Wayne Valley-High School	Parking Lot By Corner Of School	ext	250W METAL HALIDE	flood	1	295	0.3	133 WATT LED/NEW	new LED flood	1	133	0.1	0.2	710	4,380
IN	Interior	1861	Albert Payson Terhune-Elem	Gym Main	1	2L4' T8 32w/EL	box acr 1' wide	68	60	4.1	2L4' T8 28w/ELEE LO	rlrb	68	42	2.9	1.2	3,574	2,920
IN	Interior	1862	Albert Payson Terhune-Elem	Classroom 21	1	4L4' T12 EE/EEMAG-8'	wrap	6	140	0.8	2L4' T8 28w/ELEE HI/NEW-8'	new wrap	6	64	0.4	0.5	1,149	2,520
IN	Interior	1863	Albert Payson Terhune-Elem	Classroom 21	1	2L4' T12 EE/EEMAG	wrap	3	70	0.2	1L4' T8 28w/ELEE HI/NEW	new wrap	3	33	0.1	0.1	280	2,520
IN	Interior	1864	Albert Payson Terhune-Elem	Bath 21	1	2x60W INCANDESCENTS	old drum	1	120	0.1	2L2' T8 15w/ELEE LO/NEW	new wrap	1	24	0.0	0.1	319	3,320
IN	Interior	1865	Albert Payson Terhune-Elem	Classroom 20	1	4L4' T12 EE/EEMAG-8'	wrap	6	140	0.8	2L4' T8 28w/ELEE HI/NEW-8'	new wrap	6	64	0.4	0.5	1,149	2,520
IN	Interior	1866	Albert Payson Terhune-Elem	Classroom 20	1	2L4' T12 EE/EEMAG	wrap	3	70	0.2	1L4' T8 28w/ELEE HI/NEW	new wrap	3	33	0.1	0.1	280	2,520
IN	Interior	1867	Albert Payson Terhune-Elem	Bath 20	1	2x60W INCANDESCENTS	old drum	1	120	0.1	2L2' T8 15w/ELEE LO/NEW	new wrap	1	24	0.0	0.1	319	3,320
IN	Interior	1868	Albert Payson Terhune-Elem	Classroom 19	1	4L4' T12 EE/EEMAG-8'	wrap	6	140	0.8	2L4' T8 28w/ELEE HI/NEW-8'	new wrap	6	64	0.4	0.5	1,149	2,520
IN	Interior	1869	Albert Payson Terhune-Elem	Classroom 19	1	2L4' T12 EE/EEMAG	wrap	3	70	0.2	1L4' T8 28w/ELEE HI/NEW	new wrap	3	33	0.1	0.1	280	2,520
IN	Interior	1870	Albert Payson Terhune-Elem	Bath 19	1	2x60W INCANDESCENTS	old drum	1	120	0.1	2L2' T8 15w/ELEE LO/NEW	new wrap	1	24	0.0	0.1	319	3,320
IN	Interior	1871	Albert Payson Terhune-Elem	Classroom 18	1	4L4' T12 EE/EEMAG-8'	wrap	6	140	0.8	2L4' T8 28w/ELEE HI/NEW-8'	new wrap	6	64	0.4	0.5	1,149	2,520
IN	Interior	1872	Albert Payson Terhune-Elem	Classroom 18	1	2L4' T12 EE/EEMAG	wrap	3	70	0.2	1L4' T8 28w/ELEE HI/NEW	new wrap	3	33	0.1	0.1	280	2,520

In or Out	ECM	Line	Building Name	Location	Fl	Pre Fixture Description	Pre Fixture Style	Pre Qty	Pre Watts	Pre kW	Post Fixture Description	Post Fixture Style	Post Qty	Post Watts	Post kW	kW Saved	kWH Saved	Annual Hours
IN	Interior	1873	Albert Payson Terhune-Elem	Bath 18	1	2x60W INCANDESCENTS	old drum	1	120	0.1	2L2' T8 15w/ELEE LO/NEW	new wrap	1	24	0.0	0.1	319	3,320
IN	Interior	1874	Albert Payson Terhune-Elem	Classroom 17	1	4L4' T12 EE/EEMAG-8'	wrap	9	140	1.3	2L4' T8 28w/ELEE HI/NEW-8'	new wrap	9	64	0.6	0.7	1,724	2,520
IN	Interior	1875	Albert Payson Terhune-Elem	Classroom 17	1	2L4' T12 EE/EEMAG	wrap	9	70	0.6	1L4' T8 28w/ELEE HI/NEW	new wrap	9	33	0.3	0.3	839	2,520
IN	Interior	1876	Albert Payson Terhune-Elem	Bath 17	1	2x60W INCANDESCENTS	old drum	1	120	0.1	2L2' T8 15w/ELEE LO/NEW	new wrap	1	24	0.0	0.1	319	3,320
IN	Interior	1877	Albert Payson Terhune-Elem	Hall By 17	1	3L4' T8 32w/EL	trof acr	2	88	0.2	3L4' T8 28w/ELEE LO	rlrb	2	63	0.1	0.1	181	3,620
IN	Interior	1878	Albert Payson Terhune-Elem	Classroom 16	1	4L4' T12 EE/EEMAG-8'	wrap	9	140	1.3	2L4' T8 28w/ELEE HI/NEW-8'	new wrap	9	64	0.6	0.7	1,724	2,520
IN	Interior	1879	Albert Payson Terhune-Elem	Classroom 16	1	2L4' T12 EE/EEMAG	wrap	6	70	0.4	1L4' T8 28w/ELEE HI/NEW	new wrap	6	33	0.2	0.2	559	2,520
IN	Interior	1880	Albert Payson Terhune-Elem	Bath 16	1	2x60W INCANDESCENTS	old drum	1	120	0.1	2L2' T8 15w/ELEE LO/NEW	new wrap	1	24	0.0	0.1	319	3,320
IN	Interior	1881	Albert Payson Terhune-Elem	Classroom 15	1	4L4' T12 EE/EEMAG-8'	wrap	9	140	1.3	2L4' T8 28w/ELEE HI/NEW-8'	new wrap	9	64	0.6	0.7	1,724	2,520
IN	Interior	1882	Albert Payson Terhune-Elem	Classroom 15	1	2L4' T12 EE/EEMAG	wrap	6	70	0.4	1L4' T8 28w/ELEE HI/NEW	new wrap	6	33	0.2	0.2	559	2,520
IN	Interior	1883	Albert Payson Terhune-Elem	Bath 15	1	2x60W INCANDESCENTS	old drum	1	120	0.1	2L2' T8 15w/ELEE LO/NEW	new wrap	1	24	0.0	0.1	319	3,320
IN	Interior	1884	Albert Payson Terhune-Elem	Classroom 14	1	4L4' T12 EE/EEMAG-8'	wrap	6	140	0.8	2L4' T8 28w/ELEE HI/NEW-8'	new wrap	6	64	0.4	0.5	1,149	2,520
IN	Interior	1885	Albert Payson Terhune-Elem	Classroom 14	1	2L4' T12 EE/EEMAG	wrap	3	70	0.2	1L4' T8 28w/ELEE HI/NEW	new wrap	3	33	0.1	0.1	280	2,520
IN	Interior	1886	Albert Payson Terhune-Elem	Bath 14	1	2x60W INCANDESCENTS	old drum	1	120	0.1	2L2' T8 15w/ELEE LO/NEW	new wrap	1	24	0.0	0.1	319	3,320
IN	Interior	1887	Albert Payson Terhune-Elem	Classroom 13	1	4L4' T12 EE/EEMAG-8'	wrap	6	140	0.8	2L4' T8 28w/ELEE HI/NEW-8'	new wrap	6	64	0.4	0.5	1,149	2,520
IN	Interior	1888	Albert Payson Terhune-Elem	Classroom 13	1	2L4' T12 EE/EEMAG	wrap	3	70	0.2	1L4' T8 28w/ELEE HI/NEW	new wrap	3	33	0.1	0.1	280	2,520
IN	Interior	1889	Albert Payson Terhune-Elem	Bath 13	1	2x60W INCANDESCENTS	old drum	1	120	0.1	2L2' T8 15w/ELEE LO/NEW	new wrap	1	24	0.0	0.1	319	3,320
IN	Interior	1890	Albert Payson Terhune-Elem	Storage Equipment	1	2L4' T12 EE/EEMAG	wrap	2	70	0.1	1L4' T8 28w/ELEE HI/NEW	new wrap	2	33	0.1	0.1	37	500
IN	Interior	1891	Albert Payson Terhune-Elem	Bath Women	1	4L4' T8 32w/EL-8'	wrap	1	112	0.1	2L4' T8 28w/ELEE HI/NEW-8'	new wrap	1	64	0.1	0.0	159	3,320
IN	Interior	1892	Albert Payson Terhune-Elem	Bath Women	1	2L2' T12 STD/STD	vanity	1	56	0.1	2L2' T8 15w/ELEE LO/NEW	new vanity	1	24	0.0	0.0	106	3,320
IN	Interior	1893	Albert Payson Terhune-Elem	Closet Clean	1	60W INCANDESCENT	keyless	1	60	0.1	23W COMPACT SI/29712/CF23	screw in	1	23	0.0	0.0	19	500
IN	Interior	1894	Albert Payson Terhune-Elem	Bath Men	1	4L4' T8 32w/EL-8'	wrap	1	112	0.1	2L4' T8 28w/ELEE HI/NEW-8'	new wrap	1	64	0.1	0.0	159	3,320
IN	Interior	1895	Albert Payson Terhune-Elem	Bath Men	1	2L2' T12 STD/STD	vanity	1	56	0.1	2L2' T8 15w/ELEE LO/NEW	new vanity	1	24	0.0	0.0	106	3,320
IN	Interior	1896	Albert Payson Terhune-Elem	Office Custodial	1	3L4' T12 EE/EEMAG	industrial	4	110	0.4	3L4' T8 28w/ELEE LO	rlrb	4	63	0.3	0.2	436	2,320
IN	Interior	1897	Albert Payson Terhune-Elem	Mechanical Boiler	1	32W COMPACT SCREWIN	keyless	6	32	0.2	2L4' T8 28w/ELEE LO/NEW	new wrap	6	42	0.3	-0.1	-30	500
IN	Interior	1898	Albert Payson Terhune-Elem	Closet Books	1	1L4' T12 EE/EEMAG	old wrap narrow	1	40	0.0	1L4' T8 28w/ELEE HI/NEW	new wrap	1	33	0.0	0.0	4	500
IN	Interior	1899	Albert Payson Terhune-Elem	Storage Equipment	1	2L4' T12 EE/EEMAG	wrap	4	70	0.3	1L4' T8 28w/ELEE HI/NEW	new wrap	4	33	0.1	0.1	74	500
IN	Interior	1900	Albert Payson Terhune-Elem	Closet Books	1	22W & 32W CIRCLELINE	old drum	1	58	0.1	2L2' T8 15w/ELEE LO/NEW	new wrap	1	24	0.0	0.0	17	500
IN	Interior	1901	Albert Payson Terhune-Elem	Kitchen Serving Line	1	4L4' T12 EE/EEMAG-8'	old wrap	12	140	1.7	4L4' T8 28w/ELEE LO/NEW-8'	new wrap	12	83	1.0	0.7	1,313	1,920
IN	Interior	1902	Albert Payson Terhune-Elem	Kitchen Serving Line	1	2L4' T12 EE/EEMAG	old wrap	2	70	0.1	2L4' T8 28w/ELEE LO/NEW	new wrap	2	42	0.1	0.1	108	1,920
IN	Interior	1903	Albert Payson Terhune-Elem	Kitchen Grease Hood	1	60W INCANDESCENT	jar	2	60	0.1	23W COMPACT SI/29712/CF23	screw in	2	23	0.0	0.1	142	1,920
IN	Interior	1904	Albert Payson Terhune-Elem	Kitchen Wash Area	1	2L4' T12 EE/EEMAG	wrap	1	70	0.1	2L4' T8 28w/ELEE LO/NEW	new wrap	1	42	0.0	0.0	54	1,920
IN	Interior	1905	Albert Payson Terhune-Elem	Kitchen Wash Area	1	2x60W INCANDESCENTS	sconce	5	120	0.6	11W COMPACT SI/29708/CF11	screw in	10	11	0.1	0.5	941	1,920
IN	Interior	1906	Albert Payson Terhune-Elem	Storage Dry Goods	1	2L4' T12 EE/EEMAG	old wrap	1	70	0.1	1L4' T8 28w/ELEE HI/NEW	new wrap	1	33	0.0	0.0	19	500
IN	Interior	1907	Albert Payson Terhune-Elem	Lounge Staff	1	4L4' T8 32w/EL	decorative	2	112	0.2	4L4' T8 28w/ELEE LO	rlrb	2	83	0.2	0.1	146	2,520
IN	Interior	1908	Albert Payson Terhune-Elem	Office Open Main	1	4L4' T12 EE/EEMAG	trof acr	7	140	1.0	2L4' T8 28w/ELEE HI/RFL	rlrb rfl	7	64	0.4	0.5	1,447	2,720
IN	Interior	1909	Albert Payson Terhune-Elem	Office Principal	1	4L4' T12 EE/EEMAG	trof acr	4	140	0.6	2L4' T8 28w/ELEE HI/RFL	rlrb rfl	4	64	0.3	0.3	705	2,320
IN	Interior	1910	Albert Payson Terhune-Elem	Office Copy	1	4L4' T12 EE/EEMAG	trof acr	1	140	0.1	2L4' T8 28w/ELEE HI/RFL	rlrb rfl	1	64	0.1	0.1	176	2,320
IN	Interior	1911	Albert Payson Terhune-Elem	Office Nurse	1	4L4' T12 EE/EEMAG-8'	old wrap	2	140	0.3	2L4' T8 28w/ELEE HI/NEW-8'	new wrap	2	64	0.1	0.2	353	2,320
IN	Interior	1912	Albert Payson Terhune-Elem	Office Nurse	1	2L4' T12 EE/EEMAG	old wrap	2	70	0.1	1L4' T8 28w/ELEE HI/NEW	new wrap	2	33	0.1	0.1	172	2,320
IN	Interior	1913	Albert Payson Terhune-Elem	Office Nurse	1	60W INCANDESCENT	can rec 12"	1	60	0.1	11 WATT LED SI/LED10Par20/D	screw in led	1	11	0.0	0.0	114	2,320
IN	Interior	1914	Albert Payson Terhune-Elem	Bath Nurse	1	2x60W INCANDESCENTS	square surface mt	1	120	0.1	2L2' T8 15w/ELEE LO/NEW	new wrap	1	24	0.0	0.1	319	3,320
IN	Interior	1915	Albert Payson Terhune-Elem	Bath Unisex	1	2L4' T12 EE/EEMAG	trof acr	1	70	0.1	2L4' T8 28w/ELEE HI/RFL	rlrb rfl	1	64	0.1	0.0	20	3,320
IN	Interior	1916	Albert Payson Terhune-Elem	Conference Cst	1	4L4' T12 EE/EEMAG	trof acr	4	140	0.6	2L4' T8 28w/ELEE HI/RFL	rlrb rfl	4	64	0.3	0.3	705	2,320
IN	Interior	1917	Albert Payson Terhune-Elem	Classroom Reading	1	4L4' T12 EE/EEMAG	trof acr	4	140	0.6	2L4' T8 28w/ELEE HI/RFL	rlrb RT8 kit	4	64	0.3	0.3	766	2,520
IN	Interior	1918	Albert Payson Terhune-Elem	Classroom 101A	1	4L4' T12 EE/EEMAG	trof acr	7	140	1.0	2L4' T8 28w/ELEE HI/RFL	rlrb RT8 kit	7	64	0.4	0.5	1,341	2,520
IN	Interior	1919	Albert Payson Terhune-Elem	Classroom 101B	1	4L4' T12 EE/EEMAG	trof acr	7	140	1.0	2L4' T8 28w/ELEE HI/RFL	rlrb RT8 kit	7	64	0.4	0.5	1,341	2,520
IN	Interior	1920	Albert Payson Terhune-Elem	Bath 101B	1	4L4' T12 EE/EEMAG	trof acr	1	140	0.1	2L4' T8 28w/ELEE HI/RFL	rlrb rfl	1	64	0.1	0.1	252	3,320

In or Out	ECM	Line	Building Name	Location	Fl	Pre Fixture Description	Pre Fixture Style	Pre Qty	Pre Watts	Pre kW	Post Fixture Description	Post Fixture Style	Post Qty	Post Watts	Post kW	kW Saved	kWH Saved	Annual Hours
IN	Interior	1921	Albert Payson Terhune-Elem	Classroom 103A	1	4L4' T12 EE/EEMAG	trof acr	7	140	1.0	2L4' T8 28w/ELEE HI/RFL	rlrb RT8 kit	7	64	0.4	0.5	1,341	2,520
IN	Interior	1922	Albert Payson Terhune-Elem	Classroom 103B	1	4L4' T12 EE/EEMAG	trof acr	7	140	1.0	2L4' T8 28w/ELEE HI/RFL	rlrb RT8 kit	7	64	0.4	0.5	1,341	2,520
IN	Interior	1923	Albert Payson Terhune-Elem	Bath 103B	1	4L4' T12 EE/EEMAG	trof acr	1	140	0.1	2L4' T8 28w/ELEE HI/RFL	rlrb rfl	1	64	0.1	0.1	252	3,320
IN	Interior	1924	Albert Payson Terhune-Elem	Classroom 100	1	4L4' T12 EE/EEMAG	trof acr	10	140	1.4	2L4' T8 28w/ELEE HI/RFL	rlrb RT8 kit	10	64	0.6	0.8	1,915	2,520
IN	Interior	1925	Albert Payson Terhune-Elem	Bath 100	1	4L4' T12 EE/EEMAG	trof acr	1	140	0.1	2L4' T8 28w/ELEE HI/RFL	rlrb rfl	1	64	0.1	0.1	252	3,320
IN	Interior	1926	Albert Payson Terhune-Elem	Classroom 102	1	4L4' T12 EE/EEMAG	trof acr	10	140	1.4	2L4' T8 28w/ELEE HI/RFL	rlrb RT8 kit	10	64	0.6	0.8	1,915	2,520
IN	Interior	1927	Albert Payson Terhune-Elem	Bath 102	1	4L4' T12 EE/EEMAG	trof acr	1	140	0.1	2L4' T8 28w/ELEE HI/RFL	rlrb rfl	1	64	0.1	0.1	252	3,320
IN	Interior	1928	Albert Payson Terhune-Elem	Hall 102 To Gym	1	4L4' T12 EE/EEMAG	trof acr	7	140	1.0	2L4' T8 28w/ELEE HI/RFL	rlrb rfl	7	64	0.4	0.5	1,926	3,620
IN	Interior	1929	Albert Payson Terhune-Elem	Hall 102 To Gym	1	3L4' T12 EE/EEMAG	trof acr	16	110	1.8	3L4' T8 28w/ELEE LO	rlrb	16	63	1.0	0.8	2,722	3,620
IN	Interior	1930	Albert Payson Terhune-Elem	Hall 102 To Gym	1	2L4' T12 U EE/EEMAG	trof acr	2	70	0.1	2L2' T8 15w/ELEE HI/RFL	rlrb rfl	2	33	0.1	0.1	268	3,620
IN	Interior	1931	Albert Payson Terhune-Elem	Hall Display Case	1	1L4' T12 EE/EEMAG	trof acr 6" wide	1	40	0.0	1L4' T8 28w/ELEE LO	rlrb	1	22	0.0	0.0	65	3,620
IN	Interior	1932	Albert Payson Terhune-Elem	Gym Multipurpose	1	150W METAL HALIDE	lowbay	17	190	3.2	46 WATT LED/NEW	new LED RLE7200 box	17	46	0.8	2.4	7,148	2,920
IN	Interior	1933	Albert Payson Terhune-Elem	Storage Chairs	1	60W INCANDESCENT	jar	2	60	0.1	23W COMPACT SI/29712/CF23	screw in	2	23	0.0	0.1	37	500
IN	Interior	1934	Albert Payson Terhune-Elem	Classroom 12	1	4L4' T12 EE/EEMAG-8'	wrap	6	140	0.8	2L4' T8 28w/ELEE HI/NEW-8'	new wrap	6	64	0.4	0.5	1,149	2,520
IN	Interior	1935	Albert Payson Terhune-Elem	Classroom 12	1	2L4' T12 EE/EEMAG	wrap	3	70	0.2	1L4' T8 28w/ELEE HI/NEW	new wrap	3	33	0.1	0.1	280	2,520
IN	Interior	1936	Albert Payson Terhune-Elem	Bath 12	1	2x60W INCANDESCENTS	old drum	1	120	0.1	2L2' T8 15w/ELEE LO/NEW	new wrap	1	24	0.0	0.1	319	3,320
IN	Interior	1937	Albert Payson Terhune-Elem	Classroom 11	1	4L4' T12 EE/EEMAG-8'	wrap	6	140	0.8	2L4' T8 28w/ELEE HI/NEW-8'	new wrap	6	64	0.4	0.5	1,149	2,520
IN	Interior	1938	Albert Payson Terhune-Elem	Classroom 11	1	2L4' T12 EE/EEMAG	wrap	3	70	0.2	1L4' T8 28w/ELEE HI/NEW	new wrap	3	33	0.1	0.1	280	2,520
IN	Interior	1939	Albert Payson Terhune-Elem	Bath 11	1	2x60W INCANDESCENTS	old drum	1	120	0.1	2L2' T8 15w/ELEE LO/NEW	new wrap	1	24	0.0	0.1	319	3,320
IN	Interior	1940	Albert Payson Terhune-Elem	Classroom 10	1	4L4' T12 EE/EEMAG-8'	wrap	6	140	0.8	2L4' T8 28w/ELEE HI/NEW-8'	new wrap	6	64	0.4	0.5	1,149	2,520
IN	Interior	1941	Albert Payson Terhune-Elem	Classroom 10	1	2L4' T12 EE/EEMAG	wrap	3	70	0.2	1L4' T8 28w/ELEE HI/NEW	new wrap	3	33	0.1	0.1	280	2,520
IN	Interior	1942	Albert Payson Terhune-Elem	Bath 10	1	2x60W INCANDESCENTS	old drum	1	120	0.1	2L2' T8 15w/ELEE LO/NEW	new wrap	1	24	0.0	0.1	319	3,320
IN	Interior	1943	Albert Payson Terhune-Elem	Classroom 3	1	4L4' T12 EE/EEMAG-8'	wrap	6	140	0.8	2L4' T8 28w/ELEE HI/NEW-8'	new wrap	6	64	0.4	0.5	1,149	2,520
IN	Interior	1944	Albert Payson Terhune-Elem	Classroom 3	1	2L4' T12 EE/EEMAG	wrap	3	70	0.2	1L4' T8 28w/ELEE HI/NEW	new wrap	3	33	0.1	0.1	280	2,520
IN	Interior	1945	Albert Payson Terhune-Elem	Bath 3	1	2x60W INCANDESCENTS	old drum	1	120	0.1	2L2' T8 15w/ELEE LO/NEW	new wrap	1	24	0.0	0.1	319	3,320
IN	Interior	1946	Albert Payson Terhune-Elem	Classroom 2	1	4L4' T12 EE/EEMAG-8'	wrap	6	140	0.8	2L4' T8 28w/ELEE HI/NEW-8'	new wrap	6	64	0.4	0.5	1,149	2,520
IN	Interior	1947	Albert Payson Terhune-Elem	Classroom 2	1	2L4' T12 EE/EEMAG	wrap	3	70	0.2	1L4' T8 28w/ELEE HI/NEW	new wrap	3	33	0.1	0.1	280	2,520
IN	Interior	1948	Albert Payson Terhune-Elem	Bath 2	1	2x60W INCANDESCENTS	old drum	1	120	0.1	2L2' T8 15w/ELEE LO/NEW	new wrap	1	24	0.0	0.1	319	3,320
IN	Interior	1949	Albert Payson Terhune-Elem	Classroom 1	1	4L4' T12 EE/EEMAG-8'	wrap	6	140	0.8	2L4' T8 28w/ELEE HI/NEW-8'	new wrap	6	64	0.4	0.5	1,149	2,520
IN	Interior	1950	Albert Payson Terhune-Elem	Classroom 1	1	2L4' T12 EE/EEMAG	wrap	3	70	0.2	1L4' T8 28w/ELEE HI/NEW	new wrap	3	33	0.1	0.1	280	2,520
IN	Interior	1951	Albert Payson Terhune-Elem	Bath 1	1	2x60W INCANDESCENTS	old drum	1	120	0.1	2L2' T8 15w/ELEE LO/NEW	new wrap	1	24	0.0	0.1	319	3,320
IN	Interior	1952	Albert Payson Terhune-Elem	Hall By Classroom 3	1	3L2' T8 17w/EL	trof acr	3	47	0.1	3L2' T8 15w/ELEE LO	rlrb	3	39	0.1	0.0	87	3,620
IN	Interior	1953	Albert Payson Terhune-Elem	Stage	1	2L8' T12 EE/EEMAG	strip	4	123	0.5	4L4' T8 28w/ELEE LO/STRIP KI	rlrb strip kit	4	83	0.3	0.2	467	2,920
IN	Interior	1954	Albert Payson Terhune-Elem	Stage	1	150W INCANDESCENT	decorative	2	150	0.3	NO RETRO	no change		150	0.3			2,920
IN	Interior	1955	Albert Payson Terhune-Elem	Classroom 4	1	4L4' T12 EE/EEMAG-8'	old wrap	9	140	1.3	2L4' T8 28w/ELEE HI/NEW-8'	new wrap	9	64	0.6	0.7	1,724	2,520
IN	Interior	1956	Albert Payson Terhune-Elem	Classroom 5	1	4L4' T12 EE/EEMAG-8'	old wrap	9	140	1.3	2L4' T8 28w/ELEE HI/NEW-8'	new wrap	9	64	0.6	0.7	1,724	2,520
IN	Interior	1957	Albert Payson Terhune-Elem	Classroom 6	1	4L4' T12 EE/EEMAG-8'	old wrap	9	140	1.3	2L4' T8 28w/ELEE HI/NEW-8'	new wrap	9	64	0.6	0.7	1,724	2,520
IN	Interior	1958	Albert Payson Terhune-Elem	Classroom 7	1	4L4' T12 EE/EEMAG-8'	old wrap	9	140	1.3	2L4' T8 28w/ELEE HI/NEW-8'	new wrap	9	64	0.6	0.7	1,724	2,520
IN	Interior	1959	Albert Payson Terhune-Elem	Classroom 8	1	4L4' T12 EE/EEMAG-8'	old wrap	9	140	1.3	2L4' T8 28w/ELEE HI/NEW-8'	new wrap	9	64	0.6	0.7	1,724	2,520
IN	Interior	1960	Albert Payson Terhune-Elem	Classroom 9	1	4L4' T12 EE/EEMAG-8'	old wrap	9	140	1.3	2L4' T8 28w/ELEE HI/NEW-8'	new wrap	9	64	0.6	0.7	1,724	2,520
IN	Interior	1961	Albert Payson Terhune-Elem	Hall 4 To Lib	1	3L2' T8 17w/EL	trof acr	4	47	0.2	3L2' T8 15w/ELEE LO	rlrb	4	39	0.2	0.0	116	3,620
IN	Interior	1962	Albert Payson Terhune-Elem	Bath Boys	1	2L4' T12 EE/EEMAG	old wrap	2	70	0.1	1L4' T8 28w/ELEE HI/NEW	new wrap	2	33	0.1	0.1	246	3,320
IN	Interior	1963	Albert Payson Terhune-Elem	Bath Boys	1	2L4' T8 32w/EL	vanity	1	60	0.1	2L4' T8 28w/ELEE LO/NEW	new vanity	1	42	0.0	0.0	60	3,320
IN	Interior	1964	Albert Payson Terhune-Elem	Bath Girls	1	2x60W INCANDESCENTS	old drum	1	120	0.1	2L2' T8 15w/ELEE LO/NEW	new wrap	1	24	0.0	0.1	319	3,320
IN	Interior	1965	Albert Payson Terhune-Elem	Bath Girls	1	2L4' T12 EE/EEMAG	vanity	1	70	0.1	2L4' T8 28w/ELEE LO/NEW	new vanity	1	42	0.0	0.0	93	3,320
IN	Interior	1966	Albert Payson Terhune-Elem	Hall 9 To Media	1	3L2' T8 17w/EL	trof acr	4	47	0.2	3L2' T8 15w/ELEE LO	rlrb	4	39	0.2	0.0	116	3,620
IN	Interior	1967	Albert Payson Terhune-Elem	Closet Pto	1	2L4' T12 EE/EEMAG	old wrap	1	70	0.1	1L4' T8 28w/ELEE HI/NEW	new wrap	1	33	0.0	0.0	19	500
IN	Interior	1968	Albert Payson Terhune-Elem	Library	1	2L4' T12 EE/EEMAG	old wrap	13	70	0.9	1L4' T8 28w/ELEE HI/NEW	new wrap	13	33	0.4	0.5	1,212	2,520

In or Out	ECM	Line	Building Name	Location	Fl	Pre Fixture Description	Pre Fixture Style	Pre Qty	Pre Watts	Pre kW	Post Fixture Description	Post Fixture Style	Post Qty	Post Watts	Post kW	kW Saved	kWH Saved	Annual Hours
IN	Interior	1969	Albert Payson Terhune-Elem	Library	1	4L4' T12 EE/EEMAG-8'	indirect/direct	15	140	2.1	4L4' T8 28w/ELEE LO-8'	rlrb	15	83	1.2	0.9	2,155	2,520
IN	Interior	1970	Albert Payson Terhune-Elem	Office Librarian	1	4L4' T12 EE/EEMAG	trof acr	4	140	0.6	2L4' T8 28w/ELEE HI/RFL	rlrb rfl	4	64	0.3	0.3	705	2,320
IN	Interior	1971	Albert Payson Terhune-Elem	Office Librarian	1	2L4' T12 U EE/EEMAG	trof acr	1	70	0.1	2L2' T8 15w/ELEE HI/RFL	rlrb rfl	1	33	0.0	0.0	86	2,320
IN	Interior	1972	Albert Payson Terhune-Elem	Closet Server	1	2L4' T12 U EE/EEMAG	trof acr	2	70	0.1	2L2' T8 15w/ELEE HI/RFL	rlrb rfl	2	33	0.1	0.1	37	500
IN	Exterior	1973	Albert Payson Terhune-Elem	Bldg Mt Fixture 1	ext	250W METAL HALIDE	wallpack	3	295	0.9	133 WATT LED/NEW	new LED wallpack	3	133	0.4	0.5	2,129	4,380
IN	Exterior	1974	Albert Payson Terhune-Elem	Bldg Mt Fixture 2	ext	150W METAL HALIDE	wallpack	1	190	0.2	70 WATT LED/NEW	new LED wallpack	1	70	0.1	0.1	526	4,380
IN	Exterior	1975	Albert Payson Terhune-Elem	Bldg Mt Fixture 3	ext	32W COMPACT SCREWIN	square surface mt	15	32	0.5	NO RETRO	no change needed		32	0.5			4,380
IN	Exterior	1976	Albert Payson Terhune-Elem	Bldg Mt Fixture 4	ext	50W HI PRESSURE SODI	wallpack	1	65	0.1	26 WATT LED/NEW	new LED wallpack	1	26	0.0	0.0	171	4,380
IN	Exterior	1977	Albert Payson Terhune-Elem	Bldg Mt Fixture 5	ext	3 WATT LED	wallpack	1	3	0.0	NO RETRO	no change needed		3	0.0			4,380
IN	Exterior	1978	Albert Payson Terhune-Elem	Parking Lot Fixture 6	ext	250W METAL HALIDE	shoebox	3	295	0.9	133 WATT LED/NEW	new LED shoebox	3	133	0.4	0.5	2,129	4,380
IN	Interior	1979	Pines Lake-Elementary Scho	Classroom Portables	1	4L4' T8 32w/EL-8'	wrap	12	112	1.3	2L4' T8 28w/ELEE HI/NEW-8'	new wrap	12	64	0.8	0.6	1,452	2,520
IN	Interior	1980	Pines Lake-Elementary Scho	Classroom Portables	1	2L4' T8 32w/EL	wrap	3	60	0.2	1L4' T8 28w/ELEE HI/NEW	new wrap	3	33	0.1	0.1	204	2,520
IN	Interior	1981	Pines Lake-Elementary Scho	Bath Portables	1	2L4' T8 32w/EL	wrap	1	60	0.1	1L4' T8 28w/ELEE HI/NEW	new wrap	1	33	0.0	0.0	90	3,320
IN	Interior	1982	Pines Lake-Elementary Scho	Classroom 32	1	3L4' T12 EE/EEMAG	trof acrylic dbl swi	12	110	1.3	2L4' T8 28w/ELEE HI/RFL	rlrb RT8 kit	12	64	0.8	0.6	1,391	2,520
IN	Interior	1983	Pines Lake-Elementary Scho	Classroom 31	1	3L4' T12 EE/EEMAG	trof acrylic dbl swi	12	110	1.3	2L4' T8 28w/ELEE HI/RFL	rlrb RT8 kit	12	64	0.8	0.6	1,391	2,520
IN	Interior	1984	Pines Lake-Elementary Scho	Classroom 30	1	3L4' T12 EE/EEMAG	trof acrylic dbl swi	12	110	1.3	2L4' T8 28w/ELEE HI/RFL	rlrb RT8 kit	12	64	0.8	0.6	1,391	2,520
IN	Interior	1985	Pines Lake-Elementary Scho	Classroom 33	1	3L4' T12 EE/EEMAG	trof acrylic dbl swi	12	110	1.3	2L4' T8 28w/ELEE HI/RFL	rlrb RT8 kit	12	64	0.8	0.6	1,391	2,520
IN	Interior	1986	Pines Lake-Elementary Scho	Classroom 34	1	3L4' T12 EE/EEMAG	trof acrylic dbl swi	12	110	1.3	2L4' T8 28w/ELEE HI/RFL	rlrb RT8 kit	12	64	0.8	0.6	1,391	2,520
IN	Interior	1987	Pines Lake-Elementary Scho	Classroom 35	1	3L4' T12 EE/EEMAG	trof acrylic dbl swi	12	110	1.3	2L4' T8 28w/ELEE HI/RFL	rlrb RT8 kit	12	64	0.8	0.6	1,391	2,520
IN	Interior	1988	Pines Lake-Elementary Scho	Hall 34 To 32	1	3L4' T12 EE/EEMAG	trof acr	8	110	0.9	3L4' T8 28w/ELEE LO	rlrb	8	63	0.5	0.4	1,361	3,620
IN	Interior	1989	Pines Lake-Elementary Scho	Hall 34 To 32	1	2x18W COMPACT HARDV	can rec 9"	1	38	0.0	NO RETRO	no change needed		38	0.0			3,620
IN	Interior	1990	Pines Lake-Elementary Scho	Classroom 36	1	3L4' T12 EE/EEMAG	trof acrylic dbl swi	12	110	1.3	2L4' T8 28w/ELEE HI/RFL	rlrb RT8 kit	12	64	0.8	0.6	1,391	2,520
IN	Interior	1991	Pines Lake-Elementary Scho	Classroom 37A	1	3L4' T12 EE/EEMAG	trof acrylic dbl swi	6	110	0.7	2L4' T8 28w/ELEE HI/RFL	rlrb RT8 kit	6	64	0.4	0.3	696	2,520
IN	Interior	1992	Pines Lake-Elementary Scho	Classroom 37B	1	3L4' T12 EE/EEMAG	trof acrylic dbl swi	6	110	0.7	2L4' T8 28w/ELEE HI/RFL	rlrb RT8 kit	6	64	0.4	0.3	696	2,520
IN	Interior	1993	Pines Lake-Elementary Scho	Classroom 38A	1	3L4' T12 EE/EEMAG	trof acrylic dbl swi	6	110	0.7	2L4' T8 28w/ELEE HI/RFL	rlrb RT8 kit	6	64	0.4	0.3	696	2,520
IN	Interior	1994	Pines Lake-Elementary Scho	Classroom 38B	1	3L4' T12 EE/EEMAG	trof acrylic dbl swi	6	110	0.7	2L4' T8 28w/ELEE HI/RFL	rlrb RT8 kit	6	64	0.4	0.3	696	2,520
IN	Interior	1995	Pines Lake-Elementary Scho	Mechanical Electrical 1	1	3L4' T12 EE/EEMAG	trof acr	1	110	0.1	3L4' T8 28w/ELEE LO	rlrb	1	63	0.1	0.0	24	500
IN	Interior	1996	Pines Lake-Elementary Scho	Mechanical Electrical 2	1	3L4' T12 EE/EEMAG	trof acr	1	110	0.1	3L4' T8 28w/ELEE LO	rlrb	1	63	0.1	0.0	24	500
IN	Interior	1997	Pines Lake-Elementary Scho	Hall Media Center To 35	1	3L4' T12 EE/EEMAG	trof acr	11	110	1.2	3L4' T8 28w/ELEE LO	rlrb	11	63	0.7	0.5	1,872	3,620
IN	Interior	1998	Pines Lake-Elementary Scho	Hall Media Center To 35	1	3L4' T12 EE/EEMAG	trof acr	7	110	0.8	3L4' T8 28w/ELEE LO	rlrb	7	63	0.4	0.3	1,191	3,620
IN	Interior	1999	Pines Lake-Elementary Scho	Hall Media Center To 35	1	2x18W COMPACT HARDV	can rec 12"	3	38	0.1	NO RETRO	no change needed		38	0.1			3,620
IN	Interior	2000	Pines Lake-Elementary Scho	Bath Boys	1	3L4' T8 32w/EL	trof acr	4	88	0.4	3L4' T8 28w/ELEE LO	rlrb	4	63	0.3	0.1	332	3,320
IN	Interior	2001	Pines Lake-Elementary Scho	Bath Girls	1	3L4' T12 EE/EEMAG	trof acr	4	110	0.4	3L4' T8 28w/ELEE LO	rlrb	4	63	0.3	0.2	624	3,320
IN	Interior	2002	Pines Lake-Elementary Scho	Hall Door 6 To Door 1	1	3L4' T12 EE/EEMAG	trof acr	13	110	1.4	3L4' T8 28w/ELEE LO	rlrb	13	63	0.8	0.6	2,212	3,620
IN	Interior	2003	Pines Lake-Elementary Scho	Hall Door 6 To Door 1	1	18W COMPACT HARDWI	indirect	8	20	0.2	NO RETRO	no change needed		20	0.2			3,620
IN	Interior	2004	Pines Lake-Elementary Scho	Office Open Main	1	3L4' T12 EE/EEMAG	trof acr	9	110	1.0	3L4' T8 28w/ELEE LO	rlrb	9	63	0.6	0.4	1,151	2,720
IN	Interior	2005	Pines Lake-Elementary Scho	Storage Work Room	1	3L4' T12 EE/EEMAG	trof acr	2	110	0.2	3L4' T8 28w/ELEE LO	rlrb	2	63	0.1	0.1	199	2,120
IN	Interior	2006	Pines Lake-Elementary Scho	Bath Unisex	1	3L4' T12 EE/EEMAG	trof acr	1	110	0.1	3L4' T8 28w/ELEE LO	rlrb	1	63	0.1	0.0	156	3,320
IN	Interior	2007	Pines Lake-Elementary Scho	Office Principal	1	3L4' T12 EE/EEMAG	trof acr	2	110	0.2	3L4' T8 28w/ELEE LO	rlrb	2	63	0.1	0.1	218	2,320
IN	Interior	2008	Pines Lake-Elementary Scho	Hall To Gym	1	100W INCANDESCENT	decorative	1	100	0.1	1L4' T8 28w/ELEE HI/NEW	new wrap	1	33	0.0	0.1	243	3,620
IN	Interior	2009	Pines Lake-Elementary Scho	Gym Main	1	400W METAL HALIDE	high bay	8	455	3.6	172 WATT LED/NEW	new LED hibay polylens	8	172	1.4	2.3	6,611	2,920
IN	Interior	2010	Pines Lake-Elementary Scho	Stage	1	4L4' T5 HO/EL	strip	3	234	0.7	NO RETRO	no change needed		234	0.7			2,920
IN	Interior	2011	Pines Lake-Elementary Scho	Stage	1	100W INCANDESCENT	jar	3	100	0.3	23W COMPACT SI/29712/CF23	screw in	3	23	0.1	0.2	675	2,920
IN	Interior	2012	Pines Lake-Elementary Scho	Storage Gym	1	60W INCANDESCENT	keyless	4	60	0.2	2L2' T8 15w/ELEE LO/NEW	new vanity	4	24	0.1	0.1	72	500
IN	Interior	2013	Pines Lake-Elementary Scho	Hall Gym To 25	1	3L4' T12 EE/EEMAG	trof acr	22	110	2.4	3L4' T8 28w/ELEE LO	rlrb	22	63	1.4	1.0	3,743	3,620
IN	Interior	2014	Pines Lake-Elementary Scho	Hall Gym To 25	1	3L4' T12 EE/EEMAG	trof acr	5	110	0.6	3L4' T8 28w/ELEE LO	rlrb	5	63	0.3	0.2	851	3,620
IN	Interior	2015	Pines Lake-Elementary Scho	Hall Gym To 25	1	2x18W COMPACT HARDV	can rec 12"	2	38	0.1	NO RETRO	no change needed		38	0.1			3,620
IN	Interior	2016	Pines Lake-Elementary Scho	Classroom 27	1	2L4' T12 EE/EEMAG	old wrap	15	70	1.1	1L4' T8 28w/ELEE HI/NEW	new wrap	15	33	0.5	0.6	1,399	2,520

In or Out	ECM	Line	Building Name	Location	Fl	Pre Fixture Description	Pre Fixture Style	Pre Qty	Pre Watts	Pre kW	Post Fixture Description	Post Fixture Style	Post Qty	Post Watts	Post kW	kW Saved	kWH Saved	Annual Hours
IN	Interior	2017	Pines Lake-Elementary Scho	Classroom 27	1	2L4' T8 U/EL	trof acr	4	60	0.2	2L2' T8 15w/ELEE HI/RFL	rlrb RT8 kit	4	33	0.1	0.1	272	2,520
IN	Interior	2018	Pines Lake-Elementary Scho	Bath 27	1	100W INCANDESCENT	jar	1	100	0.1	23W COMPACT SI/29712/CF23	screw in	1	23	0.0	0.1	256	3,320
IN	Interior	2019	Pines Lake-Elementary Scho	Hall Vestibule	1	60W INCANDESCENT	square recessed	1	60	0.1	11W COMPACT SI/29708/CF11	screw in	1	11	0.0	0.0	177	3,620
IN	Interior	2020	Pines Lake-Elementary Scho	Classroom 26	1	2L4' T12 EE/EEMAG	old wrap	15	70	1.1	1L4' T8 28w/ELEE HI/NEW	new wrap	15	33	0.5	0.6	1,399	2,520
IN	Interior	2021	Pines Lake-Elementary Scho	Classroom 26	1	2L4' T8 U/EL	trof acr	4	60	0.2	2L2' T8 15w/ELEE HI/RFL	rlrb RT8 kit	4	33	0.1	0.1	272	2,520
IN	Interior	2022	Pines Lake-Elementary Scho	Bath 26	1	100W INCANDESCENT	jar	1	100	0.1	23W COMPACT SI/29712/CF23	screw in	1	23	0.0	0.1	256	3,320
IN	Interior	2023	Pines Lake-Elementary Scho	Storage 26	1	2L4' T12 EE/EEMAG	old wrap	2	70	0.1	1L4' T8 28w/ELEE HI/NEW	new wrap	2	33	0.1	0.1	37	500
IN	Interior	2024	Pines Lake-Elementary Scho	Cafeteria Seating Area	1	4L4' T12 EE/EEMAG-8'	indirect/direct	15	140	2.1	4L4' T8 28w/ELEE LO-8'	rlrb	15	83	1.2	0.9	2,326	2,720
IN	Interior	2025	Pines Lake-Elementary Scho	Kitchen Prep Area	1	2L4' T12 EE/EEMAG	old wrap	9	70	0.6	2L4' T8 28w/ELEE LO/NEW	new wrap	9	42	0.4	0.3	484	1,920
IN	Interior	2026	Pines Lake-Elementary Scho	Closet Clean	1	32W COMPACT SCREWIN	keyless	2	32	0.1	NO RETRO	no change needed		32	0.1			500
IN	Interior	2027	Pines Lake-Elementary Scho	Storage Dry Goods	1	2L4' T12 EE/EEMAG	old wrap	1	70	0.1	1L4' T8 28w/ELEE HI/NEW	new wrap	1	33	0.0	0.0	19	500
IN	Interior	2028	Pines Lake-Elementary Scho	Office Custodian	1	2L4' T8 32w/EL	old wrap	2	60	0.1	1L4' T8 28w/ELEE HI/NEW	new wrap	2	33	0.1	0.1	125	2,320
IN	Interior	2029	Pines Lake-Elementary Scho	Closet Electrical	1	32W COMPACT SCREWIN	old jar	1	32	0.0	NO RETRO	no change needed		32	0.0			500
IN	Interior	2030	Pines Lake-Elementary Scho	Closet Electrical	1	60W INCANDESCENT	keyless	1	60	0.1	23W COMPACT SI/29712/CF23	screw in	1	23	0.0	0.0	19	500
IN	Interior	2031	Pines Lake-Elementary Scho	Lounge Teachers	1	2L4' T8 32w/EL	wrap	1	60	0.1	1L4' T8 28w/ELEE HI/NEW	new wrap	1	33	0.0	0.0	68	2,520
IN	Interior	2032	Pines Lake-Elementary Scho	Lounge Teachers	1	4L4' T8 32w/EL-8'	wrap	2	112	0.2	2L4' T8 28w/ELEE HI/NEW-8'	new wrap	2	64	0.1	0.1	242	2,520
IN	Interior	2033	Pines Lake-Elementary Scho	Classroom 25	1	2L4' T8 32w/EL	wrap	15	60	0.9	1L4' T8 28w/ELEE HI/NEW	new wrap	15	33	0.5	0.4	1,021	2,520
IN	Interior	2034	Pines Lake-Elementary Scho	Classroom 25	1	2L4' T8 U/EL	trof acr	2	60	0.1	2L2' T8 15w/ELEE HI/RFL	rlrb RT8 kit	2	33	0.1	0.1	136	2,520
IN	Interior	2035	Pines Lake-Elementary Scho	Bath 25	1	100W INCANDESCENT	jar	1	100	0.1	23W COMPACT SI/29712/CF23	screw in	1	23	0.0	0.1	256	3,320
IN	Interior	2036	Pines Lake-Elementary Scho	Closet Supplies	1	60W INCANDESCENT	old jar	1	60	0.1	13 WATT LED/NEW	new LED jar exterior	1	13	0.0	0.0	24	500
IN	Interior	2037	Pines Lake-Elementary Scho	Classroom 24	1	2L4' T8 32w/EL	wrap	15	60	0.9	1L4' T8 28w/ELEE HI/NEW	new wrap	15	33	0.5	0.4	1,021	2,520
IN	Interior	2038	Pines Lake-Elementary Scho	Classroom 24	1	2L4' T8 U/EL	trof acr	2	60	0.1	2L2' T8 15w/ELEE HI/RFL	rlrb RT8 kit	2	33	0.1	0.1	136	2,520
IN	Interior	2039	Pines Lake-Elementary Scho	Bath 24	1	100W INCANDESCENT	jar	1	100	0.1	23W COMPACT SI/29712/CF23	screw in	1	23	0.0	0.1	256	3,320
IN	Interior	2040	Pines Lake-Elementary Scho	Classroom 23	1	2L4' T8 32w/EL	wrap	15	60	0.9	1L4' T8 28w/ELEE HI/NEW	new wrap	15	33	0.5	0.4	1,021	2,520
IN	Interior	2041	Pines Lake-Elementary Scho	Classroom 23	1	2L4' T8 U/EL	trof acr	2	60	0.1	2L2' T8 15w/ELEE HI/RFL	rlrb RT8 kit	2	33	0.1	0.1	136	2,520
IN	Interior	2042	Pines Lake-Elementary Scho	Bath 23	1	100W INCANDESCENT	jar	1	100	0.1	23W COMPACT SI/29712/CF23	screw in	1	23	0.0	0.1	256	3,320
IN	Interior	2043	Pines Lake-Elementary Scho	Closet Clean	1	42W COMPACT HARDWI	keyless	1	44	0.0	NO RETRO	no change needed		44	0.0			500
IN	Interior	2044	Pines Lake-Elementary Scho	Classroom 22	1	2L4' T8 32w/EL	wrap	15	60	0.9	1L4' T8 28w/ELEE HI/NEW	new wrap	15	33	0.5	0.4	1,021	2,520
IN	Interior	2045	Pines Lake-Elementary Scho	Classroom 22	1	2L4' T8 U/EL	trof acr	2	60	0.1	2L2' T8 15w/ELEE HI/RFL	rlrb RT8 kit	2	33	0.1	0.1	136	2,520
IN	Interior	2046	Pines Lake-Elementary Scho	Bath 22	1	100W INCANDESCENT	jar	1	100	0.1	23W COMPACT SI/29712/CF23	screw in	1	23	0.0	0.1	256	3,320
IN	Interior	2047	Pines Lake-Elementary Scho	Classroom 21	1	2L4' T8 32w/EL	wrap	15	60	0.9	1L4' T8 28w/ELEE HI/NEW	new wrap	15	33	0.5	0.4	1,021	2,520
IN	Interior	2048	Pines Lake-Elementary Scho	Classroom 21	1	2L4' T8 U/EL	trof acr	2	60	0.1	2L2' T8 15w/ELEE HI/RFL	rlrb RT8 kit	2	33	0.1	0.1	136	2,520
IN	Interior	2049	Pines Lake-Elementary Scho	Bath 21	1	100W INCANDESCENT	jar	1	100	0.1	23W COMPACT SI/29712/CF23	screw in	1	23	0.0	0.1	256	3,320
IN	Interior	2050	Pines Lake-Elementary Scho	Bath Staff	1	60W INCANDESCENT	old drum	1	60	0.1	2L2' T8 15w/ELEE LO/NEW	new wrap	1	24	0.0	0.0	120	3,320
IN	Interior	2051	Pines Lake-Elementary Scho	Classroom 20	1	2L4' T8 32w/EL	wrap	15	60	0.9	1L4' T8 28w/ELEE HI/NEW	new wrap	15	33	0.5	0.4	1,021	2,520
IN	Interior	2052	Pines Lake-Elementary Scho	Classroom 20	1	2L4' T8 U/EL	trof acr	2	60	0.1	2L2' T8 15w/ELEE HI/RFL	rlrb RT8 kit	2	33	0.1	0.1	136	2,520
IN	Interior	2053	Pines Lake-Elementary Scho	Bath 20	1	100W INCANDESCENT	jar	1	100	0.1	23W COMPACT SI/29712/CF23	screw in	1	23	0.0	0.1	256	3,320
IN	Interior	2054	Pines Lake-Elementary Scho	Hall Sgi1 To Classroom 9	1	3L4' T8 32w/EL	trof acr	16	88	1.4	3L4' T8 28w/ELEE LO	rlrb	16	63	1.0	0.4	1,448	3,620
IN	Interior	2055	Pines Lake-Elementary Scho	Hall Sgi1 To Classroom 9	1	1L6' T12 STD/STD	strip reflector	1	95	0.1	2L3' T8 21w/ELEE/NEW-6'	new wrap	1	45	0.0	0.1	181	3,620
IN	Interior	2056	Pines Lake-Elementary Scho	Mechanical Boiler	1	4L4' T8 32w/EL-8'	strip reflector	1	112	0.1	4L4' T8 28w/ELEE LO-8'	rlrb	1	83	0.1	0.0	15	500
IN	Interior	2057	Pines Lake-Elementary Scho	Mechanical Boiler	1	100W INCANDESCENT	dome	3	100	0.3	2L2' T8 15w/ELEE LO/NEW	new wrap	3	24	0.1	0.2	114	500
IN	Interior	2058	Pines Lake-Elementary Scho	Hall Boiler	1	42W COMPACT HARDWI	dome	1	44	0.0	2L4' T8 28w/ELEE LO/NEW	new wrap	1	42	0.0	0.0	7	3,620
IN	Interior	2059	Pines Lake-Elementary Scho	Classroom 1 Sgi	1	4L4' T12 EE/EEMAG	trof acr	6	140	0.8	2L4' T8 28w/ELEE HI/RFL	rlrb RT8 kit	6	64	0.4	0.5	1,149	2,520
IN	Interior	2060	Pines Lake-Elementary Scho	Classroom 2	1	4L4' T12 EE/EEMAG	trof acr	6	140	0.8	2L4' T8 28w/ELEE HI/RFL	rlrb RT8 kit	6	64	0.4	0.5	1,149	2,520
IN	Interior	2061	Pines Lake-Elementary Scho	Bath Girls	1	3L4' T8 32w/EL	box acrylic	2	88	0.2	3L4' T8 28w/ELEE LO	rlrb	2	63	0.1	0.1	166	3,320
IN	Interior	2062	Pines Lake-Elementary Scho	Classroom 3	1	4L4' T12 EE/EEMAG-8'	old wrap	9	140	1.3	2L4' T8 28w/ELEE HI/NEW-8'	new wrap	9	64	0.6	0.7	1,724	2,520
IN	Interior	2063	Pines Lake-Elementary Scho	Library	1	2L4' T8 U/EL	trof parabolic	6	60	0.4	2L2' T8 15w/ELEE HI/RFL	rlrb RT8 kit	6	33	0.2	0.2	408	2,520
IN	Interior	2064	Pines Lake-Elementary Scho	Library	1	2L4' T12 U EE/EEMAG	trof parabolic	19	70	1.3	2L2' T8 15w/ELEE HI/RFL	rlrb RT8 kit	19	33	0.6	0.7	1,772	2,520

In or Out	ECM	Line	Building Name	Location	Fl	Pre Fixture Description	Pre Fixture Style	Pre Qty	Pre Watts	Pre kW	Post Fixture Description	Post Fixture Style	Post Qty	Post Watts	Post kW	kW Saved	kWH Saved	Annual Hours
IN	Interior	2065	Pines Lake-Elementary Scho	Library	1	4L4' T12 EE/EEMAG-8'	indirect	8	140	1.1	4L4' T8 28w/ELEE LO-8'	rlrb	8	83	0.7	0.5	1,149	2,520
IN	Interior	2066	Pines Lake-Elementary Scho	Library	1	2x18W COMPACT HARDV	can rec 12"	10	38	0.4	NO RETRO	no change needed		38	0.4			2,520
IN	Interior	2067	Pines Lake-Elementary Scho	Library	1	6L4' T12 EE/EEMAG	decorative	6	210	1.3	6L4' T8 28w/ELEE LO	rlrb 4L & 2L	6	126	0.8	0.5	1,270	2,520
IN	Interior	2068	Pines Lake-Elementary Scho	Library	1	3L4' T12 EE/EEMAG	trof acr	6	110	0.7	2L4' T8 28w/ELEE HI/RFL	rlrb RT8 kit	6	64	0.4	0.3	696	2,520
IN	Interior	2069	Pines Lake-Elementary Scho	Office Lib	1	3L4' T12 EE/EEMAG	trof acr	3	110	0.3	3L4' T8 28w/ELEE LO	rlrb	3	63	0.2	0.1	327	2,320
IN	Interior	2070	Pines Lake-Elementary Scho	Storage Server	1	3L4' T12 EE/EEMAG	trof acr	2	110	0.2	3L4' T8 28w/ELEE LO	rlrb	2	63	0.1	0.1	47	500
IN	Interior	2071	Pines Lake-Elementary Scho	Lounge Staff	1	4L4' T12 EE/EEMAG	trof acr	8	140	1.1	2L4' T8 28w/ELEE HI/RFL	rlrb rfl	8	64	0.5	0.6	1,532	2,520
IN	Interior	2072	Pines Lake-Elementary Scho	Storage Lounge	1	60W INCANDESCENT	keyless	1	60	0.1	23W COMPACT SI/29712/CF23	screw in	1	23	0.0	0.0	19	500
IN	Interior	2073	Pines Lake-Elementary Scho	Bath Staff	1	4L4' T12 EE/EEMAG	trof acr	1	140	0.1	2L4' T8 28w/ELEE HI/RFL	rlrb rfl	1	64	0.1	0.1	252	3,320
IN	Interior	2074	Pines Lake-Elementary Scho	Storage Tables	1	4L4' T12 EE/EEMAG-8'	old wrap	2	140	0.3	2L4' T8 28w/ELEE HI/NEW-8'	new wrap	2	64	0.1	0.2	76	500
IN	Interior	2075	Pines Lake-Elementary Scho	Storage Tables	1	60W INCANDESCENT	dome	1	60	0.1	23W COMPACT SI/29712/CF23	screw in	1	23	0.0	0.0	19	500
IN	Interior	2076	Pines Lake-Elementary Scho	Closet Clean	1	42W COMPACT HARDWI	keyless	1	44	0.0	NO RETRO	no change needed		44	0.0			500
IN	Interior	2077	Pines Lake-Elementary Scho	Bath Boys	1	3L4' T8 32w/EL	box acrylic	2	88	0.2	3L4' T8 28w/ELEE LO	rlrb	2	63	0.1	0.1	166	3,320
IN	Interior	2078	Pines Lake-Elementary Scho	Office Nurse	1	4L4' T8 32w/EL-8'	old wrap	2	112	0.2	2L4' T8 28w/ELEE HI/NEW-8'	new wrap	2	64	0.1	0.1	223	2,320
IN	Interior	2079	Pines Lake-Elementary Scho	Bath Nurse	1	60W INCANDESCENT	vanity	1	60	0.1	2L2' T8 15w/ELEE LO/NEW	new vanity	1	24	0.0	0.0	120	3,320
IN	Interior	2080	Pines Lake-Elementary Scho	Classroom 13 Sgi	1	4L4' T8 32w/EL-8'	old wrap	6	112	0.7	2L4' T8 28w/ELEE HI/NEW-8'	new wrap	6	64	0.4	0.3	726	2,520
IN	Interior	2081	Pines Lake-Elementary Scho	Classroom 6	1	4L4' T8 32w/EL-8'	old wrap	5	112	0.6	2L4' T8 28w/ELEE HI/NEW-8'	new wrap	5	64	0.3	0.2	605	2,520
IN	Interior	2082	Pines Lake-Elementary Scho	Classroom 6	1	4L4' T12 EE/EEMAG-8'	old wrap	4	140	0.6	2L4' T8 28w/ELEE HI/NEW-8'	new wrap	4	64	0.3	0.3	766	2,520
IN	Interior	2083	Pines Lake-Elementary Scho	Classroom 7	1	4L4' T8 32w/EL-8'	old wrap	5	112	0.6	2L4' T8 28w/ELEE HI/NEW-8'	new wrap	5	64	0.3	0.2	605	2,520
IN	Interior	2084	Pines Lake-Elementary Scho	Classroom 7	1	4L4' T12 EE/EEMAG-8'	old wrap	4	140	0.6	2L4' T8 28w/ELEE HI/NEW-8'	new wrap	4	64	0.3	0.3	766	2,520
IN	Interior	2085	Pines Lake-Elementary Scho	Classroom 8	1	4L4' T8 32w/EL-8'	old wrap	5	112	0.6	2L4' T8 28w/ELEE HI/NEW-8'	new wrap	5	64	0.3	0.2	605	2,520
IN	Interior	2086	Pines Lake-Elementary Scho	Classroom 8	1	4L4' T12 EE/EEMAG-8'	old wrap	4	140	0.6	2L4' T8 28w/ELEE HI/NEW-8'	new wrap	4	64	0.3	0.3	766	2,520
IN	Interior	2087	Pines Lake-Elementary Scho	Classroom 9	1	4L4' T8 32w/EL-8'	old wrap	5	112	0.6	2L4' T8 28w/ELEE HI/NEW-8'	new wrap	5	64	0.3	0.2	605	2,520
IN	Interior	2088	Pines Lake-Elementary Scho	Classroom 9	1	4L4' T12 EE/EEMAG-8'	old wrap	4	140	0.6	2L4' T8 28w/ELEE HI/NEW-8'	new wrap	4	64	0.3	0.3	766	2,520
IN	Interior	2089	Pines Lake-Elementary Scho	Classroom 10	1	4L4' T8 32w/EL-8'	old wrap	5	112	0.6	2L4' T8 28w/ELEE HI/NEW-8'	new wrap	5	64	0.3	0.2	605	2,520
IN	Interior	2090	Pines Lake-Elementary Scho	Classroom 10	1	4L4' T12 EE/EEMAG-8'	old wrap	4	140	0.6	2L4' T8 28w/ELEE HI/NEW-8'	new wrap	4	64	0.3	0.3	766	2,520
IN	Interior	2091	Pines Lake-Elementary Scho	Classroom 11	1	4L4' T8 32w/EL-8'	old wrap	5	112	0.6	2L4' T8 28w/ELEE HI/NEW-8'	new wrap	5	64	0.3	0.2	605	2,520
IN	Interior	2092	Pines Lake-Elementary Scho	Classroom 11	1	4L4' T12 EE/EEMAG-8'	old wrap	4	140	0.6	2L4' T8 28w/ELEE HI/NEW-8'	new wrap	4	64	0.3	0.3	766	2,520
IN	Interior	2093	Pines Lake-Elementary Scho	Classroom 12	1	4L4' T8 32w/EL-8'	old wrap	5	112	0.6	2L4' T8 28w/ELEE HI/NEW-8'	new wrap	5	64	0.3	0.2	605	2,520
IN	Interior	2094	Pines Lake-Elementary Scho	Classroom 12	1	4L4' T12 EE/EEMAG-8'	old wrap	4	140	0.6	2L4' T8 28w/ELEE HI/NEW-8'	new wrap	4	64	0.3	0.3	766	2,520
IN	Exterior	2095	Pines Lake-Elementary Scho	Bldg Mt Fixture 1	ext	100W HI PRESSURE SOD	wallpack	2	130	0.3	50 WATT LED/NEW	new LED wallpack	2	50	0.1	0.2	701	4,380
IN	Exterior	2096	Pines Lake-Elementary Scho	Bldg Mt Fixture 2	ext	50W HI PRESSURE SODI	wallpack	8	65	0.5	26 WATT LED/NEW	new LED wallpack	8	26	0.2	0.3	1,367	4,380
IN	Exterior	2097	Pines Lake-Elementary Scho	Bldg Mt Fixture 3	ext	250W HI PRESSURE SOD	wallpack	11	295	3.2	133 WATT LED/NEW	new LED wallpack	11	133	1.5	1.8	7,805	4,380
IN	Exterior	2098	Pines Lake-Elementary Scho	Bldg Mt Fixture 4	ext	150W HI PRESSURE SOD	wallpack	3	190	0.6	70 WATT LED/NEW	new LED wallpack	3	70	0.2	0.4	1,577	4,380
IN	Exterior	2099	Pines Lake-Elementary Scho	Bldg Mt Fixture 5	ext	150W HI PRESSURE SOD	canopy	3	190	0.6	70 WATT LED/NEW	new LED exterior area lig	3	70	0.2	0.4	1,577	4,380
IN	Exterior	2100	Pines Lake-Elementary Scho	Bldg Mt Fixture 6	ext	50W HI PRESSURE SODI	square surface mt	2	65	0.1	26 WATT LED/NEW	new LED exterior area lig	2	26	0.1	0.1	342	4,380
IN	Exterior	2101	Pines Lake-Elementary Scho	Bldg Mt Fixture 7	ext	2x18W COMPACT HARDV	drum	1	38	0.0	NO RETRO	no change needed		38	0.0			4,380
IN	Exterior	2102	Pines Lake-Elementary Scho	Bldg Mt Fixture 8	ext	250W HI PRESSURE SOD	flood	1	295	0.3	133 WATT LED/NEW	new LED flood	1	133	0.1	0.2	710	4,380
IN	Exterior	2103	Pines Lake-Elementary Scho	Bldg Mt Fixture 9 (2)	ext	250W METAL HALIDE	shoebox	4	295	1.2	133 WATT LED/NEW	new LED shoebox	4	133	0.5	0.6	2,838	4,380
IN	Exterior	2104	Pines Lake-Elementary Scho	Bldg Mt Fixture 10	ext	72W COMPACT SCREWI	wallpack	1	72	0.1	26 WATT LED/NEW	new LED wallpack	1	26	0.0	0.0	201	4,380
IN	Exterior	2105	Pines Lake-Elementary Scho	Bldg Mt Fixture 11	ext	3x13W COMPACT HARDV	drum	7	45	0.3	NO RETRO	no change needed		45	0.3			4,380
IN	Interior	2106	Anthony Wayne-Middle Scho	Stair 4	s	2x18W COMPACT HARDV	sconce	8	38	0.3	NO RETRO	no change needed		38	0.3			3,640
IN	Interior	2107	Anthony Wayne-Middle Scho	Classroom 227	2	3L4' T8 32w/EL	indirect/direct dbl	16	88	1.4	3L4' T8 28w/ELEE LO (1L&2L BA	rlrb dbl switched	16	64	1.0	0.4	763	1,988
IN	Interior	2108	Anthony Wayne-Middle Scho	Classroom 227	2	3L2' T8 17w/EL	indirect dbl switch	4	47	0.2	3L2' T8 15w/ELEE LO	rlrb dbl switched	4	39	0.2	0.0	64	1,988
IN	Interior	2109	Anthony Wayne-Middle Scho	Classroom 226	2	3L2' F40 BIAX/EL	trof parabolic	2	102	0.2	2L2' T8 15w/ELEE HI/RFL	rlrb RT8 kit	2	33	0.1	0.1	274	1,988
IN	Interior	2110	Anthony Wayne-Middle Scho	Classroom 226	2	3L4' T8 32w/EL	trof para dbl switc	21	88	1.8	2L4' T8 28w/ELEE HI/RFL	rlrb RT8 kit	21	64	1.3	0.5	1,002	1,988
IN	Interior	2111	Anthony Wayne-Middle Scho	Classroom 225	2	3L4' T8 32w/EL	trof para dbl switc	4	88	0.4	2L4' T8 28w/ELEE HI/RFL	rlrb RT8 kit	4	64	0.3	0.1	191	1,988
IN	Interior	2112	Anthony Wayne-Middle Scho	Classroom 224	2	3L4' T8 32w/EL	trof para dbl switc	4	88	0.4	2L4' T8 28w/ELEE HI/RFL	rlrb RT8 kit	4	64	0.3	0.1	191	1,988

In or Out	ECM	Line	Building Name	Location	Fl	Pre Fixture Description	Pre Fixture Style	Pre Qty	Pre Watts	Pre kW	Post Fixture Description	Post Fixture Style	Post Qty	Post Watts	Post kW	kW Saved	kWH Saved	Annual Hours
IN	Interior	2113	Anthony Wayne-Middle Scho	Classroom 222	2	3L4' T8 32w/EL	trof para dbl switc	10	88	0.9	2L4' T8 28w/ELEE HI/RFL	rlrb RT8 kit	10	64	0.6	0.2	477	1,988
IN	Interior	2114	Anthony Wayne-Middle Scho	Classroom 222	2	3L2' F40 BIAX/EL	trof para dbl switc	2	102	0.2	2L2' T8 15w/ELEE HI/RFL	rlrb RT8 kit	2	33	0.1	0.1	274	1,988
IN	Interior	2115	Anthony Wayne-Middle Scho	Classroom 223	2	3L4' T8 32w/EL	trof para dbl switc	10	88	0.9	2L4' T8 28w/ELEE HI/RFL	rlrb RT8 kit	10	64	0.6	0.2	477	1,988
IN	Interior	2116	Anthony Wayne-Middle Scho	Classroom 223	2	3L2' F40 BIAX/EL	trof para dbl switc	2	102	0.2	2L2' T8 15w/ELEE HI/RFL	rlrb RT8 kit	2	33	0.1	0.1	274	1,988
IN	Interior	2117	Anthony Wayne-Middle Scho	Classroom 221	2	3L4' T8 32w/EL	trof para dbl switc	10	88	0.9	2L4' T8 28w/ELEE HI/RFL	rlrb RT8 kit	10	64	0.6	0.2	477	1,988
IN	Interior	2118	Anthony Wayne-Middle Scho	Classroom 221	2	3L2' F40 BIAX/EL	trof para dbl switc	2	102	0.2	2L2' T8 15w/ELEE HI/RFL	rlrb RT8 kit	2	33	0.1	0.1	274	1,988
IN	Interior	2119	Anthony Wayne-Middle Scho	Classroom 220	2	3L4' T8 32w/EL	trof para dbl switc	10	88	0.9	2L4' T8 28w/ELEE HI/RFL	rlrb RT8 kit	10	64	0.6	0.2	477	1,988
IN	Interior	2120	Anthony Wayne-Middle Scho	Classroom 220	2	3L2' F40 BIAX/EL	trof para dbl switc	2	102	0.2	2L2' T8 15w/ELEE HI/RFL	rlrb RT8 kit	2	33	0.1	0.1	274	1,988
IN	Interior	2121	Anthony Wayne-Middle Scho	Classroom 219	2	3L4' T8 32w/EL	trof para dbl switc	10	88	0.9	2L4' T8 28w/ELEE HI/RFL	rlrb RT8 kit	10	64	0.6	0.2	477	1,988
IN	Interior	2122	Anthony Wayne-Middle Scho	Classroom 219	2	3L2' F40 BIAX/EL	trof para dbl switc	2	102	0.2	2L2' T8 15w/ELEE HI/RFL	rlrb RT8 kit	2	33	0.1	0.1	274	1,988
IN	Interior	2123	Anthony Wayne-Middle Scho	Classroom 218	2	3L4' T8 32w/EL	trof para dbl switc	10	88	0.9	2L4' T8 28w/ELEE HI/RFL	rlrb RT8 kit	10	64	0.6	0.2	477	1,988
IN	Interior	2124	Anthony Wayne-Middle Scho	Classroom 218	2	3L2' F40 BIAX/EL	trof para dbl switc	2	102	0.2	2L2' T8 15w/ELEE HI/RFL	rlrb RT8 kit	2	33	0.1	0.1	274	1,988
IN	Interior	2125	Anthony Wayne-Middle Scho	Hall 226 To 218	2	3L4' T8 32w/EL	trof acr	9	88	0.8	3L4' T8 28w/ELEE LO	rlrb	9	63	0.6	0.2	573	2,548
IN	Interior	2126	Anthony Wayne-Middle Scho	Hall 226 To 218	2	4L4' T8 32w/EL	decorative	3	112	0.3	4L4' T8 28w/ELEE LO	rlrb	3	83	0.2	0.1	222	2,548
IN	Interior	2127	Anthony Wayne-Middle Scho	Hall 226 To 218	2	2x18W COMPACT HARDV	can rec 9"	12	38	0.5	NO RETRO	no change needed		38	0.5			2,548
IN	Interior	2128	Anthony Wayne-Middle Scho	Storage 218 Dr Data	2	2L4' T8 32w/EL	wrap	3	60	0.2	1L4' T8 28w/ELEE HI/NEW	new wrap	3	33	0.1	0.1	41	500
IN	Interior	2129	Anthony Wayne-Middle Scho	Stair 3	s	2x18W COMPACT HARDV	sconce	13	38	0.5	NO RETRO	no change needed		38	0.5			3,640
IN	Interior	2130	Anthony Wayne-Middle Scho	Bath Women	2	3L2' F40 BIAX/EL	trof acr	3	102	0.3	3L2' F40BIAX/EL28W	rlrb	3	94	0.3	0.0	61	2,548
IN	Interior	2131	Anthony Wayne-Middle Scho	Bath Women	2	2L2' T8 17w/EL	vanity	1	33	0.0	2L2' T8 15w/ELEE LO/NEW	new vanity	1	24	0.0	0.0	23	2,548
IN	Interior	2132	Anthony Wayne-Middle Scho	Storage 219	2	2L4' T8 32w/EL	wrap	1	60	0.1	1L4' T8 28w/ELEE HI/NEW	new wrap	1	33	0.0	0.0	14	500
IN	Interior	2133	Anthony Wayne-Middle Scho	Bath Girls	2	3L4' T8 32w/EL	trof acr	3	88	0.3	3L4' T8 28w/ELEE LO	rlrb	3	63	0.2	0.1	191	2,548
IN	Interior	2134	Anthony Wayne-Middle Scho	Bath Girls	2	2L4' T8 32w/EL	vanity	2	60	0.1	2L4' T8 28w/ELEE LO/NEW	new vanity	2	42	0.1	0.0	92	2,548
IN	Interior	2135	Anthony Wayne-Middle Scho	Storage 214 Sc	2	3L4' T8 32w/EL	trof acr	2	88	0.2	3L4' T8 28w/ELEE LO	rlrb	2	63	0.1	0.1	18	350
IN	Interior	2136	Anthony Wayne-Middle Scho	Closet Clean	2	3L4' T8 32w/EL	trof acr	1	88	0.1	3L4' T8 28w/ELEE LO	rlrb	1	63	0.1	0.0	9	350
IN	Interior	2137	Anthony Wayne-Middle Scho	Classroom 217	2	3L4' T8 32w/EL	trof para dbl switc	12	88	1.1	2L4' T8 28w/ELEE HI/RFL	rlrb RT8 kit	12	64	0.8	0.3	573	1,988
IN	Interior	2138	Anthony Wayne-Middle Scho	Classroom 215	2	3L4' T8 32w/EL	trof para dbl switc	4	88	0.4	2L4' T8 28w/ELEE HI/RFL	rlrb RT8 kit	4	64	0.3	0.1	191	1,988
IN	Interior	2139	Anthony Wayne-Middle Scho	Hall 281 Dr To 204	2	1L2' F40 BIAX/EL	wallwash	36	46	1.7	1L2' F40BIAX/EL28W	rlrb	36	32	1.2	0.5	1,835	3,640
IN	Interior	2140	Anthony Wayne-Middle Scho	Hall 281 Dr To 204	2	2x18W COMPACT HARDV	can rec 9"	4	38	0.2	NO RETRO	no change needed		38	0.2			3,640
IN	Interior	2141	Anthony Wayne-Middle Scho	Hall 281 Dr To 204	2	4L4' T8 32w/EL	decorative	1	112	0.1	4L4' T8 28w/ELEE LO	rlrb	1	83	0.1	0.0	106	3,640
IN	Interior	2142	Anthony Wayne-Middle Scho	Classroom 214	2	3L4' T8 32w/EL	trof para dbl switc	15	88	1.3	2L4' T8 28w/ELEE HI/RFL	rlrb RT8 kit	15	64	1.0	0.4	716	1,988
IN	Interior	2143	Anthony Wayne-Middle Scho	Storage 214Sc	2	3L4' T8 32w/EL	trof acr	2	88	0.2	3L4' T8 28w/ELEE LO	rlrb	2	63	0.1	0.1	18	350
IN	Interior	2144	Anthony Wayne-Middle Scho	Office Prep Room	2	3L4' T8 32w/EL	trof para dbl switc	3	88	0.3	3L4' T8 28w/ELEE LO (1L&2L BA	rlrb dbl switched	3	64	0.2	0.1	143	1,988
IN	Interior	2145	Anthony Wayne-Middle Scho	Classroom 201	2	3L4' T8 32w/EL	trof para dbl switc	15	88	1.3	2L4' T8 28w/ELEE HI/RFL	rlrb RT8 kit	15	64	1.0	0.4	716	1,988
IN	Interior	2146	Anthony Wayne-Middle Scho	Storage 201Sc	2	3L2' F40 BIAX/EL	trof acr	1	102	0.1	3L2' F40BIAX/EL28W	rlrb	1	94	0.1	0.0	3	350
IN	Interior	2147	Anthony Wayne-Middle Scho	Hall Rotunda	2	1L2' 24W T5HO/EL	cove	35	29	1.0	NO RETRO	no change needed		29	1.0			2,548
IN	Interior	2148	Anthony Wayne-Middle Scho	Storage 201	2	3L4' T8 32w/EL	trof acr	2	88	0.2	3L4' T8 28w/ELEE LO	rlrb	2	63	0.1	0.1	18	350
IN	Interior	2149	Anthony Wayne-Middle Scho	Classroom 216	2	3L4' T8 32w/EL	trof para dbl switc	9	88	0.8	2L4' T8 28w/ELEE HI/RFL	rlrb RT8 kit	9	64	0.6	0.2	429	1,988
IN	Interior	2150	Anthony Wayne-Middle Scho	Classroom 216	2	3L2' F40 BIAX/EL	trof para dbl switc	1	102	0.1	2L2' T8 15w/ELEE HI/RFL	rlrb RT8 kit	1	33	0.0	0.1	137	1,988
IN	Interior	2151	Anthony Wayne-Middle Scho	Office Breakout Room	2	100W METAL HALIDE	indirect	4	120	0.5	NO RETRO	no change		120	0.5			2,840
IN	Interior	2152	Anthony Wayne-Middle Scho	Office Breakout Room	2	150W METAL HALIDE	can rec 9"	4	190	0.8	22 WATT LED/KIT	Spectrum Lighting can re	4	22	0.1	0.7	1,908	2,840
IN	Interior	2153	Anthony Wayne-Middle Scho	Classroom 200	2	3L4' T8 32w/EL	trof para dbl switc	9	88	0.8	2L4' T8 28w/ELEE HI/RFL	rlrb RT8 kit	9	64	0.6	0.2	429	1,988
IN	Interior	2154	Anthony Wayne-Middle Scho	Classroom 200	2	3L2' F40 BIAX/EL	trof para dbl switc	1	102	0.1	2L2' T8 15w/ELEE HI/RFL	rlrb RT8 kit	1	33	0.0	0.1	137	1,988
IN	Interior	2155	Anthony Wayne-Middle Scho	Classroom 203	2	3L4' T8 32w/EL	trof para dbl switc	4	88	0.4	2L4' T8 28w/ELEE HI/RFL	rlrb RT8 kit	4	64	0.3	0.1	191	1,988
IN	Interior	2156	Anthony Wayne-Middle Scho	Storage 202	2	3L4' T8 32w/EL	trof acr	1	88	0.1	3L4' T8 28w/ELEE LO	rlrb	1	63	0.1	0.0	9	350
IN	Interior	2157	Anthony Wayne-Middle Scho	Classroom 202	2	3L4' T8 32w/EL	trof para dbl switc	12	88	1.1	2L4' T8 28w/ELEE HI/RFL	rlrb RT8 kit	12	64	0.8	0.3	573	1,988
IN	Interior	2158	Anthony Wayne-Middle Scho	Bath Boys	2	3L4' T8 32w/EL	trof acr	4	88	0.4	3L4' T8 28w/ELEE LO	rlrb	4	63	0.3	0.1	255	2,548
IN	Interior	2159	Anthony Wayne-Middle Scho	Bath Boys	2	2L4' T8 32w/EL	vanity	2	60	0.1	2L4' T8 28w/ELEE LO/NEW	new vanity	2	42	0.1	0.0	92	2,548
IN	Interior	2160	Anthony Wayne-Middle Scho	Storage 201Sc	2	3L4' T8 32w/EL	trof parabolic	2	88	0.2	2L4' T8 28w/ELEE HI/RFL	rlrb rfl	2	64	0.1	0.0	17	350

In or Out	ECM	Line	Building Name	Location	Fl	Pre Fixture Description	Pre Fixture Style	Pre Qty	Pre Watts	Pre kW	Post Fixture Description	Post Fixture Style	Post Qty	Post Watts	Post kW	kW Saved	kWH Saved	Annual Hours
IN	Interior	2161	Anthony Wayne-Middle Scho	Bath Men	2	3L2' F40 BIAX/EL	trof acr	3	102	0.3	3L2' F40BIAX/EL28W	rlrb	3	94	0.3	0.0	61	2,548
IN	Interior	2162	Anthony Wayne-Middle Scho	Bath Men	2	2L2' T8 17w/EL	vanity	1	33	0.0	2L2' T8 15w/ELEE LO/NEW	new vanity	1	24	0.0	0.0	23	2,548
IN	Interior	2163	Anthony Wayne-Middle Scho	Stair 2	s	2x18W COMPACT HARDV	sconce	13	38	0.5	NO RETRO	no change needed		38	0.5			3,640
IN	Interior	2164	Anthony Wayne-Middle Scho	Mechanical 204 Me	2	2L4' T8 32w/EL	wrap	3	60	0.2	1L4' T8 28w/ELEE HI/NEW	new wrap	3	33	0.1	0.1	41	500
IN	Interior	2165	Anthony Wayne-Middle Scho	Hall 204 Me To Stair 1	2	3L4' T8 32w/EL	trof acr	9	88	0.8	3L4' T8 28w/ELEE LO	rlrb	9	63	0.6	0.2	573	2,548
IN	Interior	2166	Anthony Wayne-Middle Scho	Hall 204 Me To Stair 1	2	4L4' T8 32w/EL	decorative	3	112	0.3	4L4' T8 28w/ELEE LO	rlrb	3	83	0.2	0.1	222	2,548
IN	Interior	2167	Anthony Wayne-Middle Scho	Hall 204 Me To Stair 1	2	2x18W COMPACT HARDV	can rec 9"	10	38	0.4	NO RETRO	no change needed		38	0.4			2,548
IN	Interior	2168	Anthony Wayne-Middle Scho	Classroom 205	2	3L4' T8 32w/EL	trof para dbl switc	11	88	1.0	2L4' T8 28w/ELEE HI/RFL	rlrb RT8 kit	11	64	0.7	0.3	525	1,988
IN	Interior	2169	Anthony Wayne-Middle Scho	Classroom 205	2	3L2' F40 BIAX/EL	trof para dbl switc	1	102	0.1	2L2' T8 15w/ELEE HI/RFL	rlrb RT8 kit	1	33	0.0	0.1	137	1,988
IN	Interior	2170	Anthony Wayne-Middle Scho	Storage 205 Sc	2	3L4' T8 32w/EL	trof acr	1	88	0.1	3L4' T8 28w/ELEE LO	rlrb	1	63	0.1	0.0	9	350
IN	Interior	2171	Anthony Wayne-Middle Scho	Classroom 204	2	3L4' T8 32w/EL	trof para dbl switc	10	88	0.9	2L4' T8 28w/ELEE HI/RFL	rlrb RT8 kit	10	64	0.6	0.2	477	1,988
IN	Interior	2172	Anthony Wayne-Middle Scho	Classroom 204	2	3L2' F40 BIAX/EL	trof para dbl switc	2	102	0.2	2L2' T8 15w/ELEE HI/RFL	rlrb RT8 kit	2	33	0.1	0.1	274	1,988
IN	Interior	2173	Anthony Wayne-Middle Scho	Classroom 207	2	3L4' T8 32w/EL	trof para dbl switc	11	88	1.0	2L4' T8 28w/ELEE HI/RFL	rlrb RT8 kit	11	64	0.7	0.3	525	1,988
IN	Interior	2174	Anthony Wayne-Middle Scho	Classroom 207	2	3L2' F40 BIAX/EL	trof para dbl switc	1	102	0.1	2L2' T8 15w/ELEE HI/RFL	rlrb RT8 kit	1	33	0.0	0.1	137	1,988
IN	Interior	2175	Anthony Wayne-Middle Scho	Classroom 204	2	3L4' T8 32w/EL	trof para dbl switc	9	88	0.8	2L4' T8 28w/ELEE HI/RFL	rlrb RT8 kit	9	64	0.6	0.2	429	1,988
IN	Interior	2176	Anthony Wayne-Middle Scho	Classroom 204	2	3L2' F40 BIAX/EL	trof para dbl switc	2	102	0.2	2L2' T8 15w/ELEE HI/RFL	rlrb RT8 kit	2	33	0.1	0.1	274	1,988
IN	Interior	2177	Anthony Wayne-Middle Scho	Classroom 208	2	3L4' T8 32w/EL	trof para dbl switc	11	88	1.0	2L4' T8 28w/ELEE HI/RFL	rlrb RT8 kit	11	64	0.7	0.3	525	1,988
IN	Interior	2178	Anthony Wayne-Middle Scho	Classroom 208	2	3L2' F40 BIAX/EL	trof para dbl switc	1	102	0.1	2L2' T8 15w/ELEE HI/RFL	rlrb RT8 kit	1	33	0.0	0.1	137	1,988
IN	Interior	2179	Anthony Wayne-Middle Scho	Classroom 209	2	3L4' T8 32w/EL	trof para dbl switc	10	88	0.9	2L4' T8 28w/ELEE HI/RFL	rlrb RT8 kit	10	64	0.6	0.2	477	1,988
IN	Interior	2180	Anthony Wayne-Middle Scho	Classroom 209	2	3L2' F40 BIAX/EL	trof para dbl switc	2	102	0.2	2L2' T8 15w/ELEE HI/RFL	rlrb RT8 kit	2	33	0.1	0.1	274	1,988
IN	Interior	2181	Anthony Wayne-Middle Scho	Classroom 211	2	3L4' T8 32w/EL	trof para dbl switc	4	88	0.4	2L4' T8 28w/ELEE HI/RFL	rlrb RT8 kit	4	64	0.3	0.1	191	1,988
IN	Interior	2182	Anthony Wayne-Middle Scho	Classroom 210	2	3L4' T8 32w/EL	trof para dbl switc	4	88	0.4	2L4' T8 28w/ELEE HI/RFL	rlrb RT8 kit	4	64	0.3	0.1	191	1,988
IN	Interior	2183	Anthony Wayne-Middle Scho	Classroom 212	2	3L4' T8 32w/EL	trof para dbl switc	15	88	1.3	2L4' T8 28w/ELEE HI/RFL	rlrb RT8 kit	15	64	1.0	0.4	716	1,988
IN	Interior	2184	Anthony Wayne-Middle Scho	Classroom 212	2	3L2' F40 BIAX/EL	trof para dbl switc	1	102	0.1	2L2' T8 15w/ELEE HI/RFL	rlrb RT8 kit	1	33	0.0	0.1	137	1,988
IN	Interior	2185	Anthony Wayne-Middle Scho	Storage 212 Sc	2	3L4' T8 32w/EL	trof parabolic	2	88	0.2	2L4' T8 28w/ELEE HI/RFL	rlrb rfl	2	64	0.1	0.0	17	350
IN	Interior	2186	Anthony Wayne-Middle Scho	Classroom 213	2	3L4' T8 32w/EL	trof para dbl switc	15	88	1.3	2L4' T8 28w/ELEE HI/RFL	rlrb RT8 kit	15	64	1.0	0.4	716	1,988
IN	Interior	2187	Anthony Wayne-Middle Scho	Classroom 213	2	3L2' F40 BIAX/EL	trof para dbl switc	1	102	0.1	2L2' T8 15w/ELEE HI/RFL	rlrb RT8 kit	1	33	0.0	0.1	137	1,988
IN	Interior	2188	Anthony Wayne-Middle Scho	Office 212 Ao	2	3L4' T8 32w/EL	trof para dbl switc	2	88	0.2	3L4' T8 28w/ELEE LO (1L&2L BA	rlrb dbl switched	2	64	0.1	0.0	95	1,988
IN	Interior	2189	Anthony Wayne-Middle Scho	Stair 1	s	2x18W COMPACT HARDV	sconce	8	38	0.3	NO RETRO	no change needed		38	0.3			3,640
IN	Interior	2190	Anthony Wayne-Middle Scho	Office 108 Ao	1	3L4' T8 32w/EL	trof para dbl switc	2	88	0.2	3L4' T8 28w/ELEE LO (1L&2L BA	rlrb dbl switched	2	64	0.1	0.0	95	1,988
IN	Interior	2191	Anthony Wayne-Middle Scho	Classroom 108	1	6L4' T8 32w/EL-8'	indirect dbl switch	12	180	2.2	6L4' T8 28w/ELEE LO-8'	rlrb	12	126	1.5	0.6	1,288	1,988
IN	Interior	2192	Anthony Wayne-Middle Scho	Office 108 P3	1	3L4' T8 32w/EL	indirect dbl switch	2	88	0.2	3L4' T8 28w/ELEE LO (1L&2L BA	rlrb dbl switched	2	64	0.1	0.0	95	1,988
IN	Interior	2193	Anthony Wayne-Middle Scho	Office 108 P2	1	3L4' T8 32w/EL	indirect dbl switch	2	88	0.2	3L4' T8 28w/ELEE LO (1L&2L BA	rlrb dbl switched	2	64	0.1	0.0	95	1,988
IN	Interior	2194	Anthony Wayne-Middle Scho	Office 108 P1	1	3L4' T8 32w/EL	indirect dbl switch	2	88	0.2	3L4' T8 28w/ELEE LO (1L&2L BA	rlrb dbl switched	2	64	0.1	0.0	95	1,988
IN	Interior	2195	Anthony Wayne-Middle Scho	Storage 108 Sa	1	2L4' T8 32w/EL	wrap	1	60	0.1	1L4' T8 28w/ELEE HI/NEW	new wrap	1	33	0.0	0.0	9	350
IN	Interior	2196	Anthony Wayne-Middle Scho	Storage 108 Sb	1	2L4' T8 32w/EL	wrap	1	60	0.1	1L4' T8 28w/ELEE HI/NEW	new wrap	1	33	0.0	0.0	9	350
IN	Interior	2197	Anthony Wayne-Middle Scho	Storage 108 Sc	1	2L4' T8 32w/EL	wrap	1	60	0.1	1L4' T8 28w/ELEE HI/NEW	new wrap	1	33	0.0	0.0	9	350
IN	Interior	2198	Anthony Wayne-Middle Scho	Classroom 109	1	6L4' T8 32w/EL-8'	indirect dbl switch	12	180	2.2	6L4' T8 28w/ELEE LO-8'	rlrb	12	126	1.5	0.6	1,288	1,988
IN	Interior	2199	Anthony Wayne-Middle Scho	Hall 109 To Cafetorium	1	3L4' T8 32w/EL	trof parabolic	3	88	0.3	2L4' T8 28w/ELEE HI/RFL	rlrb rfl	3	64	0.2	0.1	262	3,640
IN	Interior	2200	Anthony Wayne-Middle Scho	Hall 109 To Cafetorium	1	3L4' T8 32w/EL	trof parabolic	4	88	0.4	2L4' T8 28w/ELEE HI/RFL	rlrb rfl	4	64	0.3	0.1	349	3,640
IN	Interior	2201	Anthony Wayne-Middle Scho	Hall 109 To Cafetorium	1	2L4' T8 28w/ELEE	indirect	2	48	0.1	2L4' T8 28w/ELEE LO	rlrb	2	42	0.1	0.0	44	3,640
IN	Interior	2202	Anthony Wayne-Middle Scho	Hall 109 To Cafetorium	1	3L4' T8 32w/EL	trof parabolic	3	88	0.3	2L4' T8 28w/ELEE HI/RFL	rlrb rfl	3	64	0.2	0.1	262	3,640
IN	Interior	2203	Anthony Wayne-Middle Scho	Lounge Staff	1	3L4' T8 32w/EL	trof para dbl switc	9	88	0.8	3L4' T8 28w/ELEE LO (1L&2L BA	rlrb dbl switched	9	64	0.6	0.2	381	1,764
IN	Interior	2204	Anthony Wayne-Middle Scho	Bath Boys	1	2x13W COMPACT HARDV	can rec 9"	1	30	0.0	NO RETRO	no change needed		30	0.0			2,548
IN	Interior	2205	Anthony Wayne-Middle Scho	Bath Boys	1	3L4' T8 32w/EL	trof acr	2	88	0.2	3L4' T8 28w/ELEE LO	rlrb	2	63	0.1	0.1	127	2,548
IN	Interior	2206	Anthony Wayne-Middle Scho	Bath Girls	1	2x13W COMPACT HARDV	can rec 9"	1	30	0.0	NO RETRO	no change needed		30	0.0			2,548
IN	Interior	2207	Anthony Wayne-Middle Scho	Bath Girls	1	3L4' T8 32w/EL	trof acr	2	88	0.2	3L4' T8 28w/ELEE LO	rlrb	2	63	0.1	0.1	127	2,548
IN	Interior	2208	Anthony Wayne-Middle Scho	Cafeteria Seating Area	1	6L4' T8 32w/EL-8'	indirect/direct	30	180	5.4	6L4' T8 28w/ELEE LO-8'	rlrb	30	126	3.8	1.6	5,573	3,440

In or Out	ECM	Line	Building Name	Location	Fl	Pre Fixture Description	Pre Fixture Style	Pre Qty	Pre Watts	Pre kW	Post Fixture Description	Post Fixture Style	Post Qty	Post Watts	Post kW	kW Saved	kWH Saved	Annual Hours
IN	Interior	2209	Anthony Wayne-Middle Scho	Cafeteria Seating Area	1	150W INCANDESCENT	decorative	8	150	1.2	NO RETRO	no change		150	1.2			3,440
IN	Interior	2210	Anthony Wayne-Middle Scho	Office 128 S1	1	3L4' T8 32w/EL	trof acr	4	88	0.4	3L4' T8 28w/ELEE LO	rlrb	4	63	0.3	0.1	199	1,988
IN	Interior	2211	Anthony Wayne-Middle Scho	Kitchen 131 Cf	1	2x18W COMPACT HARDV	can rec 9"	15	38	0.6	NO RETRO	no change needed		38	0.6			2,840
IN	Interior	2212	Anthony Wayne-Middle Scho	Kitchen 131 Cf	1	3L4' T8 32w/EL	trof acr	9	88	0.8	3L4' T8 28w/ELEE LO	rlrb	9	63	0.6	0.2	639	2,840
IN	Interior	2213	Anthony Wayne-Middle Scho	Kitchen Grease Hood	1	100W INCANDESCENT	jar	8	100	0.8	23W COMPACT SI/29712/CF23	screw in	8	23	0.2	0.6	1,749	2,840
IN	Interior	2214	Anthony Wayne-Middle Scho	Kitchen Grease Hood	1	3L2' F40 BIAX/EL	trof acr	4	102	0.4	3L2' F40BIAX/EL28W	rlrb	4	94	0.4	0.0	91	2,840
IN	Interior	2215	Anthony Wayne-Middle Scho	Closet 131 Sc	1	2x18W COMPACT HARDV	sconce	1	38	0.0	NO RETRO	no change needed		38	0.0			350
IN	Interior	2216	Anthony Wayne-Middle Scho	Bath By 130 Ao	1	3L2' F40 BIAX/EL	trof acr	1	102	0.1	3L2' F40BIAX/EL28W	rlrb	1	94	0.1	0.0	20	2,548
IN	Interior	2217	Anthony Wayne-Middle Scho	Office 130 Ao	1	3L4' T8 32w/EL	trof para dbl switc	2	88	0.2	3L4' T8 28w/ELEE LO (1L&2L BA	rlrb dbl switched	2	64	0.1	0.0	95	1,988
IN	Interior	2218	Anthony Wayne-Middle Scho	Stage 130 Ao	1	250W METAL HALIDE	high bay	3	295	0.9	4L4' T8 28w/ELEE HI/NEW-8'	new wrap	3	126	0.4	0.5	1,643	3,240
IN	Interior	2219	Anthony Wayne-Middle Scho	Stage 130 Ao	1	23W COMPACT HARDWI	keyless	4	24	0.1	NO RETRO	no change needed		24	0.1			3,240
IN	Interior	2220	Anthony Wayne-Middle Scho	Storage Video	1	2L4' T8 32w/EL	vapor tight	2	60	0.1	2L4' T8 28w/ELEE LO	rlrb	2	42	0.1	0.0	13	350
IN	Interior	2221	Anthony Wayne-Middle Scho	Mechanical 106 Fire Alarm	1	2L4' T8 32w/EL	wrap	8	60	0.5	1L4' T8 28w/ELEE HI/NEW	new wrap	8	33	0.3	0.2	108	500
IN	Interior	2222	Anthony Wayne-Middle Scho	Classroom 107	1	3L4' T8 32w/EL	trof para dbl switc	11	88	1.0	2L4' T8 28w/ELEE HI/RFL	rlrb RT8 kit	11	64	0.7	0.3	525	1,988
IN	Interior	2223	Anthony Wayne-Middle Scho	Classroom 107	1	3L2' F40 BIAX/EL	trof para dbl switc	1	102	0.1	2L2' T8 15w/ELEE HI/RFL	rlrb RT8 kit	1	33	0.0	0.1	137	1,988
IN	Interior	2224	Anthony Wayne-Middle Scho	Classroom 104	1	3L4' T8 32w/EL	trof para dbl switc	11	88	1.0	2L4' T8 28w/ELEE HI/RFL	rlrb RT8 kit	11	64	0.7	0.3	525	1,988
IN	Interior	2225	Anthony Wayne-Middle Scho	Classroom 104	1	3L2' F40 BIAX/EL	trof para dbl switc	1	102	0.1	2L2' T8 15w/ELEE HI/RFL	rlrb RT8 kit	1	33	0.0	0.1	137	1,988
IN	Interior	2226	Anthony Wayne-Middle Scho	Classroom 105	1	3L4' T8 32w/EL	trof para dbl switc	10	88	0.9	2L4' T8 28w/ELEE HI/RFL	rlrb RT8 kit	10	64	0.6	0.2	477	1,988
IN	Interior	2227	Anthony Wayne-Middle Scho	Classroom 105	1	3L2' F40 BIAX/EL	trof para dbl switc	2	102	0.2	2L2' T8 15w/ELEE HI/RFL	rlrb RT8 kit	2	33	0.1	0.1	274	1,988
IN	Interior	2228	Anthony Wayne-Middle Scho	Classroom 103	1	3L4' T8 32w/EL	trof para dbl switc	10	88	0.9	2L4' T8 28w/ELEE HI/RFL	rlrb RT8 kit	10	64	0.6	0.2	477	1,988
IN	Interior	2229	Anthony Wayne-Middle Scho	Classroom 103	1	3L2' F40 BIAX/EL	trof para dbl switc	2	102	0.2	2L2' T8 15w/ELEE HI/RFL	rlrb RT8 kit	2	33	0.1	0.1	274	1,988
IN	Interior	2230	Anthony Wayne-Middle Scho	Classroom 102	1	3L4' T8 32w/EL	trof para dbl switc	10	88	0.9	2L4' T8 28w/ELEE HI/RFL	rlrb RT8 kit	10	64	0.6	0.2	477	1,988
IN	Interior	2231	Anthony Wayne-Middle Scho	Classroom 102	1	3L2' F40 BIAX/EL	trof para dbl switc	2	102	0.2	2L2' T8 15w/ELEE HI/RFL	rlrb RT8 kit	2	33	0.1	0.1	274	1,988
IN	Interior	2232	Anthony Wayne-Middle Scho	Mechanical 101 Me	1	2L4' T8 32w/EL	wrap	3	60	0.2	1L4' T8 28w/ELEE HI/NEW	new wrap	3	33	0.1	0.1	41	500
IN	Interior	2233	Anthony Wayne-Middle Scho	Bath Men	1	3L2' F40 BIAX/EL	trof acr	3	102	0.3	3L2' F40BIAX/EL28W	rlrb	3	94	0.3	0.0	61	2,548
IN	Interior	2234	Anthony Wayne-Middle Scho	Bath Men	1	2L2' T8 17w/EL	vanity	1	33	0.0	2L2' T8 15w/ELEE LO/NEW	new vanity	1	24	0.0	0.0	23	2,548
IN	Interior	2235	Anthony Wayne-Middle Scho	Bath Boys	1	3L4' T8 32w/EL	trof acr	4	88	0.4	3L4' T8 28w/ELEE LO	rlrb	4	63	0.3	0.1	255	2,548
IN	Interior	2236	Anthony Wayne-Middle Scho	Bath Boys	1	2L4' T8 32w/EL	vanity	2	60	0.1	2L4' T8 28w/ELEE LO/NEW	new vanity	2	42	0.1	0.0	92	2,548
IN	Interior	2237	Anthony Wayne-Middle Scho	Hall Stair 1 To Stair 2	1	1L2' F40 BIAX/EL	wallwash	4	46	0.2	1L2' F40BIAX/EL28W	rlrb	4	32	0.1	0.1	204	3,640
IN	Interior	2238	Anthony Wayne-Middle Scho	Hall Stair 1 To Stair 2	1	3L4' T8 32w/EL	trof acr	9	88	0.8	3L4' T8 28w/ELEE LO	rlrb	9	63	0.6	0.2	819	3,640
IN	Interior	2239	Anthony Wayne-Middle Scho	Hall Stair 1 To Stair 2	1	4L4' T8 32w/EL	decorative	4	112	0.4	4L4' T8 28w/ELEE LO	rlrb	4	83	0.3	0.1	422	3,640
IN	Interior	2240	Anthony Wayne-Middle Scho	Hall Stair 1 To Stair 2	1	2x18W COMPACT HARDV	can rec 9"	12	38	0.5	NO RETRO	no change needed		38	0.5			3,640
IN	Interior	2241	Anthony Wayne-Middle Scho	Hall Stair 2 To Boys Locker	1	3L4' T8 32w/EL	trof parabolic	5	88	0.4	2L4' T8 28w/ELEE HI/RFL	rlrb rfl	5	64	0.3	0.1	437	3,640
IN	Interior	2242	Anthony Wayne-Middle Scho	Hall Stair 2 To Boys Locker	1	3L4' T8 32w/EL	trof parabolic	2	88	0.2	2L4' T8 28w/ELEE HI/RFL	rlrb rfl	2	64	0.1	0.0	175	3,640
IN	Interior	2243	Anthony Wayne-Middle Scho	Hall Stair 2 To Boys Locker	1	2L4' T8 28w/ELEE-8'	indirect	2	48	0.1	2L4' T8 28w/ELEE LO-8'	rlrb	2	42	0.1	0.0	44	3,640
IN	Interior	2244	Anthony Wayne-Middle Scho	Hall Stair 2 To Boys Locker	1	1L2' F40 BIAX/EL	wallwash	2	46	0.1	1L2' F40BIAX/EL28W	rlrb	2	32	0.1	0.0	102	3,640
IN	Interior	2245	Anthony Wayne-Middle Scho	Bath Boys	1	3L4' T8 32w/EL	trof acr	2	88	0.2	3L4' T8 28w/ELEE LO	rlrb	2	63	0.1	0.1	182	3,640
IN	Interior	2246	Anthony Wayne-Middle Scho	Bath Boys	1	3L2' F40 BIAX/EL	trof acr	1	102	0.1	3L2' F40BIAX/EL28W	rlrb	1	94	0.1	0.0	29	3,640
IN	Interior	2247	Anthony Wayne-Middle Scho	Locker Boys	1	3L2' F40 BIAX/EL	trof acr	2	102	0.2	3L2' F40BIAX/EL28W	rlrb	2	94	0.2	0.0	58	3,640
IN	Interior	2248	Anthony Wayne-Middle Scho	Locker Boys	1	3L4' T8 32w/EL	trof acr	12	88	1.1	3L4' T8 28w/ELEE LO	rlrb	12	63	0.8	0.3	1,092	3,640
IN	Interior	2249	Anthony Wayne-Middle Scho	Locker Toilet	1	3L4' T8 32w/EL	trof acr	2	88	0.2	3L4' T8 28w/ELEE LO	rlrb	2	63	0.1	0.1	127	2,548
IN	Interior	2250	Anthony Wayne-Middle Scho	Office 125 Ao Coach	1	3L4' T8 32w/EL	trof para dbl switc	2	88	0.2	3L4' T8 28w/ELEE LO (1L&2L BA	rlrb dbl switched	2	64	0.1	0.0	136	2,840
IN	Interior	2251	Anthony Wayne-Middle Scho	Bath 125 Ao Coach	1	3L2' F40 BIAX/EL	trof acr	1	102	0.1	3L2' F40BIAX/EL28W	rlrb	1	94	0.1	0.0	29	3,640
IN	Interior	2252	Anthony Wayne-Middle Scho	Bath 125 Ao Coach	1	2L2' T8 17w/EL	vanity	1	33	0.0	2L2' T8 15w/ELEE LO/NEW	new vanity	1	24	0.0	0.0	33	3,640
IN	Interior	2253	Anthony Wayne-Middle Scho	Bath 125 Ao Coach	1	2x18W COMPACT HARDV	can rec 9"	1	38	0.0	NO RETRO	no change needed		38	0.0			3,640
IN	Interior	2254	Anthony Wayne-Middle Scho	Gym Main	1	400W METAL HALIDE	indirect	16	455	7.3	222 WATT LED/NEW	new LED hibay polylens	16	222	3.6	3.7	12,824	3,440
IN	Interior	2255	Anthony Wayne-Middle Scho	Storage 123 Sta	1	2L4' T8 32w/EL	wrap	2	60	0.1	1L4' T8 28w/ELEE HI/NEW	new wrap	2	33	0.1	0.1	19	350
IN	Interior	2256	Anthony Wayne-Middle Scho	Storage 123 St B	1	2L4' T8 32w/EL	wrap	2	60	0.1	1L4' T8 28w/ELEE HI/NEW	new wrap	2	33	0.1	0.1	19	350

In or Out	ECM	Line	Building Name	Location	Fl	Pre Fixture Description	Pre Fixture Style	Pre Qty	Pre Watts	Pre kW	Post Fixture Description	Post Fixture Style	Post Qty	Post Watts	Post kW	kW Saved	kWH Saved	Annual Hours
IN	Interior	2257	Anthony Wayne-Middle Scho	Gym 124 Aux	1	250W METAL HALIDE	indirect	12	295	3.5	222 WATT LED/NEW	new LED hibay polylens	12	222	2.7	0.9	3,013	3,440
IN	Interior	2258	Anthony Wayne-Middle Scho	Storage 124 S2	1	2L4' T8 32w/EL	wrap	1	60	0.1	1L4' T8 28w/ELEE HI/NEW	new wrap	1	33	0.0	0.0	9	350
IN	Interior	2259	Anthony Wayne-Middle Scho	Storage 124 S1	1	2L4' T8 32w/EL	wrap	1	60	0.1	1L4' T8 28w/ELEE HI/NEW	new wrap	1	33	0.0	0.0	9	350
IN	Interior	2260	Anthony Wayne-Middle Scho	Gym 126 Aux	1	250W METAL HALIDE	indirect	12	295	3.5	222 WATT LED/NEW	new LED hibay polylens	12	222	2.7	0.9	3,013	3,440
IN	Interior	2261	Anthony Wayne-Middle Scho	Storage 126 S2	1	2L4' T8 32w/EL	wrap	1	60	0.1	1L4' T8 28w/ELEE HI/NEW	new wrap	1	33	0.0	0.0	9	350
IN	Interior	2262	Anthony Wayne-Middle Scho	Storage 126 S1	1	2L4' T8 32w/EL	wrap	1	60	0.1	1L4' T8 28w/ELEE HI/NEW	new wrap	1	33	0.0	0.0	9	350
IN	Interior	2263	Anthony Wayne-Middle Scho	Hall Stair 3 To Girls Locker	1	3L4' T8 32w/EL	trof parabolic	5	88	0.4	2L4' T8 28w/ELEE HI/RFL	rlrb rfl	5	64	0.3	0.1	437	3,640
IN	Interior	2264	Anthony Wayne-Middle Scho	Hall Stair 3 To Girls Locker	1	3L4' T8 32w/EL	trof parabolic	2	88	0.2	2L4' T8 28w/ELEE HI/RFL	rlrb rfl	2	64	0.1	0.0	175	3,640
IN	Interior	2265	Anthony Wayne-Middle Scho	Hall Stair 3 To Girls Locker	1	2L4' T8 28w/ELEE-8'	indirect	2	48	0.1	2L4' T8 28w/ELEE LO-8'	rlrb	2	42	0.1	0.0	44	3,640
IN	Interior	2266	Anthony Wayne-Middle Scho	Hall Stair 3 To Girls Locker	1	1L2' F40 BIAX/EL	wallwash	2	46	0.1	1L2' F40BIAX/EL28W	rlrb	2	32	0.1	0.0	102	3,640
IN	Interior	2267	Anthony Wayne-Middle Scho	Bath Girls	1	3L4' T8 32w/EL	trof acr	2	88	0.2	3L4' T8 28w/ELEE LO	rlrb	2	63	0.1	0.1	182	3,640
IN	Interior	2268	Anthony Wayne-Middle Scho	Bath Girls	1	3L2' F40 BIAX/EL	trof acr	1	102	0.1	3L2' F40BIAX/EL28W	rlrb	1	94	0.1	0.0	29	3,640
IN	Interior	2269	Anthony Wayne-Middle Scho	Locker 127 Girls	1	3L2' F40 BIAX/EL	trof acr	2	102	0.2	3L2' F40BIAX/EL28W	rlrb	2	94	0.2	0.0	58	3,640
IN	Interior	2270	Anthony Wayne-Middle Scho	Locker 127 Girls	1	3L4' T8 32w/EL	trof acr	12	88	1.1	3L4' T8 28w/ELEE LO	rlrb	12	63	0.8	0.3	1,092	3,640
IN	Interior	2271	Anthony Wayne-Middle Scho	Locker Toilet	1	3L4' T8 32w/EL	trof acr	2	88	0.2	3L4' T8 28w/ELEE LO	rlrb	2	63	0.1	0.1	182	3,640
IN	Interior	2272	Anthony Wayne-Middle Scho	Office 127 Ao Coach	1	3L4' T8 32w/EL	trof para dbl switc	2	88	0.2	3L4' T8 28w/ELEE LO (1L&2L BA	rlrb dbl switched	2	64	0.1	0.0	136	2,840
IN	Interior	2273	Anthony Wayne-Middle Scho	Bath 127 Ao Coach	1	3L2' F40 BIAX/EL	trof acr	1	102	0.1	3L2' F40BIAX/EL28W	rlrb	1	94	0.1	0.0	29	3,640
IN	Interior	2274	Anthony Wayne-Middle Scho	Bath 127 Ao Coach	1	2L2' T8 17w/EL	vanity	1	33	0.0	2L2' T8 15w/ELEE LO/NEW	new vanity	1	24	0.0	0.0	33	3,640
IN	Interior	2275	Anthony Wayne-Middle Scho	Bath 127 Ao Coach	1	2x18W COMPACT HARDV	can rec 9"	1	38	0.0	NO RETRO	no change needed		38	0.0			3,640
IN	Interior	2276	Anthony Wayne-Middle Scho	Classroom 101	1	3L4' T8 32w/EL	trof para dbl switc	15	88	1.3	2L4' T8 28w/ELEE HI/RFL	rlrb RT8 kit	15	64	1.0	0.4	716	1,988
IN	Interior	2277	Anthony Wayne-Middle Scho	Office 101 Sp	1	3L4' T8 32w/EL	trof para dbl switc	4	88	0.4	3L4' T8 28w/ELEE LO (1L&2L BA	rlrb dbl switched	4	64	0.3	0.1	191	1,988
IN	Interior	2278	Anthony Wayne-Middle Scho	Mechanical 101 Me Elevator	1	2L4' T8 32w/EL	wrap	1	60	0.1	1L4' T8 28w/ELEE HI/NEW	new wrap	1	33	0.0	0.0	14	500
IN	Interior	2279	Anthony Wayne-Middle Scho	Classroom 112 Science	1	3L4' T8 32w/EL	trof para dbl switc	15	88	1.3	2L4' T8 28w/ELEE HI/RFL	rlrb RT8 kit	15	64	1.0	0.4	716	1,988
IN	Interior	2280	Anthony Wayne-Middle Scho	Storage 100 Sc Paper Storage	1	3L2' F40 BIAX/EL	trof acr	2	102	0.2	3L2' F40BIAX/EL28W	rlrb	2	94	0.2	0.0	6	350
IN	Interior	2281	Anthony Wayne-Middle Scho	Hall 100 Sc To Stair 3	1	1L2' F40 BIAX/EL	wallwash	36	46	1.7	1L2' F40BIAX/EL28W	rlrb	36	32	1.2	0.5	1,835	3,640
IN	Interior	2282	Anthony Wayne-Middle Scho	Hall 100 Sc To Stair 3	1	2x18W COMPACT HARDV	can rec 9"	2	38	0.1	NO RETRO	no change needed		38	0.1			3,640
IN	Interior	2283	Anthony Wayne-Middle Scho	Hall 100 Sc To Stair 3	1	4L4' T8 32w/EL	decorative	1	112	0.1	4L4' T8 28w/ELEE LO	rlrb	1	83	0.1	0.0	106	3,640
IN	Interior	2284	Anthony Wayne-Middle Scho	Hall 100 Sc To Stair 3	1	1L2' 24W T5HO/EL	cove	35	29	1.0	NO RETRO	no change needed		29	1.0			3,640
IN	Interior	2285	Anthony Wayne-Middle Scho	Hall 100 Sc To Stair 3	1	3L4' T8 32w/EL	trof parabolic	2	88	0.2	2L4' T8 28w/ELEE HI/RFL	rlrb rfl	2	64	0.1	0.0	175	3,640
IN	Interior	2286	Anthony Wayne-Middle Scho	Hall Entry	1	2x13W COMPACT HARDV	can rec 9"	4	30	0.1	NO RETRO	no change needed		30	0.1			3,640
IN	Interior	2287	Anthony Wayne-Middle Scho	Hall Entry	1	100W METAL HALIDE	indirect	4	120	0.5	NO RETRO	no change		120	0.5			3,640
IN	Interior	2288	Anthony Wayne-Middle Scho	Office Open 100 Main	1	6L4' T8 32w/EL-8'	indirect/direct dbl	9	180	1.6	6L4' T8 28w/ELEE LO-8'	rlrb	9	126	1.1	0.5	1,170	2,408
IN	Interior	2289	Anthony Wayne-Middle Scho	Office 100 Co	1	3L4' T8 32w/EL	trof para dbl switc	2	88	0.2	3L4' T8 28w/ELEE LO (1L&2L BA	rlrb dbl switched	2	64	0.1	0.0	95	1,988
IN	Interior	2290	Anthony Wayne-Middle Scho	Office 100 Do	1	9L4' T8 32w/EL-12'	indirect/direct dbl	1	264	0.3	9L4' T8 28w/ELEE LO-12'	rlrb	1	189	0.2	0.1	149	1,988
IN	Interior	2291	Anthony Wayne-Middle Scho	Office 100 Ao	1	9L4' T8 32w/EL-12'	indirect/direct dbl	1	264	0.3	9L4' T8 28w/ELEE LO-12'	rlrb	1	189	0.2	0.1	149	1,988
IN	Interior	2292	Anthony Wayne-Middle Scho	Bath Staff	1	3L2' F40 BIAX/EL	trof acr	1	102	0.1	3L2' F40BIAX/EL28W	rlrb	1	94	0.1	0.0	20	2,548
IN	Interior	2293	Anthony Wayne-Middle Scho	Conference 100 Bo	1	9L4' T8 32w/EL-12'	indirect/direct dbl	1	264	0.3	9L4' T8 28w/ELEE LO-12'	rlrb	1	189	0.2	0.1	149	1,988
IN	Interior	2294	Anthony Wayne-Middle Scho	Storage 100 Eo	1	3L4' T8 32w/EL	trof acr	2	88	0.2	3L4' T8 28w/ELEE LO	rlrb	2	63	0.1	0.1	85	1,708
IN	Interior	2295	Anthony Wayne-Middle Scho	Office Open 110	1	9L4' T8 32w/EL-12'	indirect/direct dbl	2	264	0.5	9L4' T8 28w/ELEE LO-12'	rlrb	2	189	0.4	0.2	361	2,408
IN	Interior	2296	Anthony Wayne-Middle Scho	Office Open 110	1	3L2' F40 BIAX/EL	trof parabolic	2	102	0.2	3L2' F40BIAX/EL28W	rlrb	2	94	0.2	0.0	39	2,408
IN	Interior	2297	Anthony Wayne-Middle Scho	Office 110 Eo	1	6L4' T8 32w/EL-8'	indirect/direct dbl	1	180	0.2	6L4' T8 28w/ELEE LO-8'	rlrb	1	126	0.1	0.1	107	1,988
IN	Interior	2298	Anthony Wayne-Middle Scho	Office 110 Do	1	6L4' T8 32w/EL-8'	indirect/direct dbl	1	180	0.2	6L4' T8 28w/ELEE LO-8'	rlrb	1	126	0.1	0.1	107	1,988
IN	Interior	2299	Anthony Wayne-Middle Scho	Storage 110 Cc	1	3L2' F40 BIAX/EL	trof acr	1	102	0.1	3L2' F40BIAX/EL28W	rlrb	1	94	0.1	0.0	3	350
IN	Interior	2300	Anthony Wayne-Middle Scho	Office 110 Co	1	6L4' T8 32w/EL-8'	indirect/direct dbl	1	180	0.2	6L4' T8 28w/ELEE LO-8'	rlrb	1	126	0.1	0.1	107	1,988
IN	Interior	2301	Anthony Wayne-Middle Scho	Office 110 Bo	1	6L4' T8 32w/EL-8'	indirect/direct dbl	1	180	0.2	6L4' T8 28w/ELEE LO-8'	rlrb	1	126	0.1	0.1	107	1,988
IN	Interior	2302	Anthony Wayne-Middle Scho	Office 110 Ao	1	6L4' T8 32w/EL-8'	indirect/direct dbl	1	180	0.2	6L4' T8 28w/ELEE LO-8'	rlrb	1	126	0.1	0.1	107	1,988
IN	Interior	2303	Anthony Wayne-Middle Scho	Storage 110 Sc	1	3L4' T8 32w/EL	trof acrylic dbl swi	1	88	0.1	3L4' T8 28w/ELEE LO (1L&2L BA	rlrb dbl switched	1	64	0.1	0.0	8	350
IN	Interior	2304	Anthony Wayne-Middle Scho	Office 111 Nurse	1	3L2' F40 BIAX/EL	trof acr	1	102	0.1	3L2' F40BIAX/EL28W	rlrb	1	94	0.1	0.0	16	1,988

In or Out	ECM	Line	Building Name	Location	Fl	Pre Fixture Description	Pre Fixture Style	Pre Qty	Pre Watts	Pre kW	Post Fixture Description	Post Fixture Style	Post Qty	Post Watts	Post kW	kW Saved	kWH Saved	Annual Hours
IN	Interior	2305	Anthony Wayne-Middle Scho	Office 111 Nurse	1	6L4' T8 32w/EL-8'	indirect/direct dbl	2	180	0.4	6L4' T8 28w/ELEE LO-8'	rlrb	2	126	0.3	0.1	215	1,988
IN	Interior	2306	Anthony Wayne-Middle Scho	Office 111 Nurse	1	3L4' T8 32w/EL	troffer indirect	1	88	0.1	3L4' T8 28w/ELEE LO	rlrb	1	63	0.1	0.0	71	2,840
IN	Interior	2307	Anthony Wayne-Middle Scho	Office 111 Nurse	1	3L4' T8 32w/EL	troffer indirect	1	88	0.1	3L4' T8 28w/ELEE LO	rlrb	1	63	0.1	0.0	71	2,840
IN	Interior	2308	Anthony Wayne-Middle Scho	Office 111 Nurse	1	3L4' T8 32w/EL	troffer indirect	1	88	0.1	3L4' T8 28w/ELEE LO	rlrb	1	63	0.1	0.0	71	2,840
IN	Interior	2309	Anthony Wayne-Middle Scho	Office 111 Nurse	1	3L4' T8 32w/EL	troffer indirect	1	88	0.1	3L4' T8 28w/ELEE LO	rlrb	1	63	0.1	0.0	71	2,840
IN	Interior	2310	Anthony Wayne-Middle Scho	Bath 111 Nurse	1	3L4' T8 32w/EL	trof acr	1	88	0.1	3L4' T8 28w/ELEE LO	rlrb	1	63	0.1	0.0	64	2,548
IN	Interior	2311	Anthony Wayne-Middle Scho	Office 110 Ao Exam	1	3L4' T8 32w/EL	trof para dbl switc	2	88	0.2	3L4' T8 28w/ELEE LO (1L&2L BA	rlrb dbl switched	2	64	0.1	0.0	95	1,988
IN	Interior	2312	Anthony Wayne-Middle Scho	Storage 111 Sc Medical	1	3L4' T8 32w/EL	trof acr	1	88	0.1	3L4' T8 28w/ELEE LO	rlrb	1	63	0.1	0.0	9	350
IN	Interior	2313	Anthony Wayne-Middle Scho	Bath Girls	1	3L4' T8 32w/EL	trof acr	4	88	0.4	3L4' T8 28w/ELEE LO	rlrb	4	63	0.3	0.1	255	2,548
IN	Interior	2314	Anthony Wayne-Middle Scho	Bath Girls	1	2L4' T8 32w/EL	vanity	2	60	0.1	2L4' T8 28w/ELEE LO/NEW	new vanity	2	42	0.1	0.0	92	2,548
IN	Interior	2315	Anthony Wayne-Middle Scho	Bath Women	1	3L2' F40 BIAX/EL	trof acr	3	102	0.3	3L2' F40BIAX/EL28W	rlrb	3	94	0.3	0.0	61	2,548
IN	Interior	2316	Anthony Wayne-Middle Scho	Bath Women	1	2L4' T8 32w/EL	vanity	1	60	0.1	2L4' T8 28w/ELEE LO/NEW	new vanity	1	42	0.0	0.0	46	2,548
IN	Interior	2317	Anthony Wayne-Middle Scho	Closet 114 Jc / 114 Dr	1	2L4' T8 32w/EL	wrap	4	60	0.2	1L4' T8 28w/ELEE HI/NEW	new wrap	4	33	0.1	0.1	54	500
IN	Interior	2318	Anthony Wayne-Middle Scho	Hall 114 Jc To 122	1	3L4' T8 32w/EL	trof acr	9	88	0.8	3L4' T8 28w/ELEE LO	rlrb	9	63	0.6	0.2	819	3,640
IN	Interior	2319	Anthony Wayne-Middle Scho	Hall 114 Jc To 122	1	2x13W COMPACT HARDV	can rec 9"	8	30	0.2	NO RETRO	no change needed		30	0.2			3,640
IN	Interior	2320	Anthony Wayne-Middle Scho	Hall 114 Jc To 122	1	4L4' T8 32w/EL	decorative	3	112	0.3	4L4' T8 28w/ELEE LO	rlrb	3	83	0.2	0.1	317	3,640
IN	Interior	2321	Anthony Wayne-Middle Scho	Office Open 113 Cst	1	3L4' T8 32w/EL	trof para dbl switc	4	88	0.4	3L4' T8 28w/ELEE LO (1L&2L BA	rlrb dbl switched	4	64	0.3	0.1	231	2,408
IN	Interior	2322	Anthony Wayne-Middle Scho	Office Open 113 Cst	1	3L2' F40 BIAX/EL	trof para dbl switc	2	102	0.2	3L2' F40BIAX/EL28W	rlrb	2	94	0.2	0.0	39	2,408
IN	Interior	2323	Anthony Wayne-Middle Scho	Office 113 Ao	1	3L4' T8 32w/EL	trof para dbl switc	2	88	0.2	3L4' T8 28w/ELEE LO (1L&2L BA	rlrb dbl switched	2	64	0.1	0.0	95	1,988
IN	Interior	2324	Anthony Wayne-Middle Scho	Office 113 Co	1	3L4' T8 32w/EL	trof para dbl switc	2	88	0.2	3L4' T8 28w/ELEE LO (1L&2L BA	rlrb dbl switched	2	64	0.1	0.0	95	1,988
IN	Interior	2325	Anthony Wayne-Middle Scho	Closet 113 Sc	1	3L4' T8 32w/EL	trof acr	1	88	0.1	3L4' T8 28w/ELEE LO	rlrb	1	63	0.1	0.0	9	350
IN	Interior	2326	Anthony Wayne-Middle Scho	Office 113 Bo	1	3L4' T8 32w/EL	trof para dbl switc	2	88	0.2	3L4' T8 28w/ELEE LO (1L&2L BA	rlrb dbl switched	2	64	0.1	0.0	95	1,988
IN	Interior	2327	Anthony Wayne-Middle Scho	Office 113 Do	1	3L4' T8 32w/EL	trof para dbl switc	2	88	0.2	3L4' T8 28w/ELEE LO (1L&2L BA	rlrb dbl switched	2	64	0.1	0.0	95	1,988
IN	Interior	2328	Anthony Wayne-Middle Scho	Classroom 114	1	3L4' T8 32w/EL	trof para dbl switc	11	88	1.0	2L4' T8 28w/ELEE HI/RFL	rlrb RT8 kit	11	64	0.7	0.3	525	1,988
IN	Interior	2329	Anthony Wayne-Middle Scho	Classroom 114	1	3L2' F40 BIAX/EL	trof para dbl switc	1	102	0.1	2L2' T8 15w/ELEE HI/RFL	rlrb RT8 kit	1	33	0.0	0.1	137	1,988
IN	Interior	2330	Anthony Wayne-Middle Scho	Classroom 116	1	3L4' T8 32w/EL	trof para dbl switc	11	88	1.0	2L4' T8 28w/ELEE HI/RFL	rlrb RT8 kit	11	64	0.7	0.3	525	1,988
IN	Interior	2331	Anthony Wayne-Middle Scho	Classroom 116	1	3L2' F40 BIAX/EL	trof para dbl switc	1	102	0.1	2L2' T8 15w/ELEE HI/RFL	rlrb RT8 kit	1	33	0.0	0.1	137	1,988
IN	Interior	2332	Anthony Wayne-Middle Scho	Classroom 115	1	3L4' T8 32w/EL	trof para dbl switc	11	88	1.0	2L4' T8 28w/ELEE HI/RFL	rlrb RT8 kit	11	64	0.7	0.3	525	1,988
IN	Interior	2333	Anthony Wayne-Middle Scho	Classroom 115	1	3L2' F40 BIAX/EL	trof para dbl switc	1	102	0.1	2L2' T8 15w/ELEE HI/RFL	rlrb RT8 kit	1	33	0.0	0.1	137	1,988
IN	Interior	2334	Anthony Wayne-Middle Scho	Classroom 117	1	3L4' T8 32w/EL	trof para dbl switc	11	88	1.0	2L4' T8 28w/ELEE HI/RFL	rlrb RT8 kit	11	64	0.7	0.3	525	1,988
IN	Interior	2335	Anthony Wayne-Middle Scho	Classroom 117	1	3L2' F40 BIAX/EL	trof para dbl switc	1	102	0.1	2L2' T8 15w/ELEE HI/RFL	rlrb RT8 kit	1	33	0.0	0.1	137	1,988
IN	Interior	2336	Anthony Wayne-Middle Scho	Classroom 118	1	3L4' T8 32w/EL	trof para dbl switc	7	88	0.6	2L4' T8 28w/ELEE HI/RFL	rlrb RT8 kit	7	64	0.4	0.2	334	1,988
IN	Interior	2337	Anthony Wayne-Middle Scho	Classroom 118	1	3L2' F40 BIAX/EL	trof para dbl switc	1	102	0.1	2L2' T8 15w/ELEE HI/RFL	rlrb RT8 kit	1	33	0.0	0.1	137	1,988
IN	Interior	2338	Anthony Wayne-Middle Scho	Classroom 120	1	3L4' T8 32w/EL	trof para dbl switc	7	88	0.6	2L4' T8 28w/ELEE HI/RFL	rlrb RT8 kit	7	64	0.4	0.2	334	1,988
IN	Interior	2339	Anthony Wayne-Middle Scho	Classroom 120	1	3L2' F40 BIAX/EL	trof para dbl switc	1	102	0.1	2L2' T8 15w/ELEE HI/RFL	rlrb RT8 kit	1	33	0.0	0.1	137	1,988
IN	Interior	2340	Anthony Wayne-Middle Scho	Classroom 121	1	3L4' T8 32w/EL	indirect dbl switch	11	88	1.0	3L4' T8 28w/ELEE LO (1L&2L BA	rlrb dbl switched	11	64	0.7	0.3	525	1,988
IN	Interior	2341	Anthony Wayne-Middle Scho	Classroom 121	1	3L2' T8 17w/EL	indirect dbl switch	1	47	0.0	3L2' T8 15w/ELEE LO	rlrb dbl switched	1	39	0.0	0.0	16	1,988
IN	Interior	2342	Anthony Wayne-Middle Scho	Classroom 119	1	3L4' T8 32w/EL	indirect dbl switch	18	88	1.6	3L4' T8 28w/ELEE LO (1L&2L BA	rlrb dbl switched	18	64	1.2	0.4	859	1,988
IN	Interior	2343	Anthony Wayne-Middle Scho	Classroom 119	1	3L2' T8 17w/EL	indirect dbl switch	2	47	0.1	3L2' T8 15w/ELEE LO	rlrb dbl switched	2	39	0.1	0.0	32	1,988
IN	Interior	2344	Anthony Wayne-Middle Scho	Shop 122 Tech Lab/Wood	1	2L4' T5 HO/EL	vapor tight	15	117	1.8	NO RETRO	no change needed		117	1.8			2,440
IN	Interior	2345	Anthony Wayne-Middle Scho	Lounge 132 O2	1	9L4' T8 32w/EL-12'	indirect/direct dbl	2	264	0.5	9L4' T8 28w/ELEE LO-12'	rlrb	2	189	0.4	0.2	265	1,764
IN	Interior	2346	Anthony Wayne-Middle Scho	Office 132-01	1	9L4' T8 32w/EL-12'	indirect/direct dbl	1	264	0.3	9L4' T8 28w/ELEE LO-12'	rlrb	1	189	0.2	0.1	149	1,988
IN	Interior	2347	Anthony Wayne-Middle Scho	Storage A/V	1	3L4' T8 32w/EL	trof acr	4	88	0.4	3L4' T8 28w/ELEE LO	rlrb	4	63	0.3	0.1	171	1,708
IN	Interior	2348	Anthony Wayne-Middle Scho	Library	1	6L4' T8 32w/EL-8'	indirect/direct dbl	45	180	8.1	6L4' T8 28w/ELEE LO-8'	rlrb	45	126	5.7	2.4	6,901	2,840
IN	Interior	2349	Anthony Wayne-Middle Scho	Storage 132 Dr	1	3L4' T8 32w/EL	trof acr	1	88	0.1	3L4' T8 28w/ELEE LO	rlrb	1	63	0.1	0.0	43	1,708
IN	Interior	2350	Anthony Wayne-Middle Scho	Bath Boys	1	3L4' T8 32w/EL	trof acr	1	88	0.1	3L4' T8 28w/ELEE LO	rlrb	1	63	0.1	0.0	64	2,548
IN	Interior	2351	Anthony Wayne-Middle Scho	Bath Girls	1	3L4' T8 32w/EL	trof acr	1	88	0.1	3L4' T8 28w/ELEE LO	rlrb	1	63	0.1	0.0	64	2,548
IN	Interior	2352	Anthony Wayne-Middle Scho	Hall Lib To 117	1	3L4' T8 32w/EL	trof para dbl switc	5	88	0.4	3L4' T8 28w/ELEE LO (1L&2L BA	rlrb dbl switched	5	64	0.3	0.1	437	3,640

In or Out	ECM	Line	Building Name	Location	Fl	Pre Fixture Description	Pre Fixture Style	Pre Qty	Pre Watts	Pre kW	Post Fixture Description	Post Fixture Style	Post Qty	Post Watts	Post kW	kW Saved	kWH Saved	Annual Hours
IN	Interior	2353	Anthony Wayne-Middle Scho	Hall Lib To 117	1	2L4' T5 HO/EL-8'	indirect	2	117	0.2	NO RETRO	no change needed		117	0.2			3,640
IN	Interior	2354	Anthony Wayne-Middle Scho	Hall Lib To 117	1	3L4' T8 32w/EL	trof para dbl switc	6	88	0.5	3L4' T8 28w/ELEE LO (1L&2L BA	rlrb dbl switched	6	64	0.4	0.1	524	3,640
IN	Exterior	2355	Anthony Wayne-Middle Scho	Bldg Mt Fixture 1	ext	2x18W COMPACT HARDV	sconce	41	38	1.6	NO RETRO	no change needed		38	1.6			4,380
IN	Exterior	2356	Anthony Wayne-Middle Scho	Bldg Mt Fixture 2	ext	100W METAL HALIDE	indirect	6	120	0.7	NO RETRO	no change		120	0.7			4,380
IN	Exterior	2357	Anthony Wayne-Middle Scho	Bldg Mt Fixture 3	ext	150W METAL HALIDE	indirect	8	190	1.5	NO RETRO	no change		190	1.5			4,380
IN	Exterior	2358	Anthony Wayne-Middle Scho	Bldg Mt Fixture 4	ext	2x18W COMPACT HARDV	canopy	2	38	0.1	NO RETRO	no change needed		38	0.1			4,380
IN	Exterior	2359	Anthony Wayne-Middle Scho	Bldg Mt Fixture 5	ext	50W METAL HALIDE	can rec 6"	5	65	0.3	22 WATT LED/KIT	Spectrum Lighting can re	5	22	0.1	0.2	942	4,380
IN	Exterior	2360	Anthony Wayne-Middle Scho	Parking Lot Around School (44)	ext	250W HI PRESSURE SOD	shoebox	44	295	13.0	133 WATT LED/NEW	new LED shoebox	44	133	5.9	7.1	31,221	4,380
IN	Interior	2361	Wayne Hills-High School	Classroom 235	2	4L4' T8 32w/EL-8'	wrap	4	112	0.4	2L4' T8 28w/ELEE HI/NEW-8'	new wrap	4	64	0.3	0.2	382	1,988
IN	Interior	2362	Wayne Hills-High School	Classroom 235	2	2L4' T8 28w/ELEE	wrap	1	48	0.0	1L4' T8 28w/ELEE HI/NEW	new wrap	1	33	0.0	0.0	30	1,988
IN	Interior	2363	Wayne Hills-High School	Classroom 235	2	4L4' T8 32w/EL-8'	wrap	8	112	0.9	2L4' T8 28w/ELEE HI/NEW-8'	new wrap	8	64	0.5	0.4	763	1,988
IN	Interior	2364	Wayne Hills-High School	Classroom 235	2	2L4' T8 28w/ELEE	wrap	2	48	0.1	1L4' T8 28w/ELEE HI/NEW	new wrap	2	33	0.1	0.0	60	1,988
IN	Interior	2365	Wayne Hills-High School	Classroom 236	2	4L4' T8 32w/EL-8'	wrap	3	112	0.3	2L4' T8 28w/ELEE HI/NEW-8'	new wrap	3	64	0.2	0.1	286	1,988
IN	Interior	2366	Wayne Hills-High School	Classroom 236	2	2L4' T8 28w/ELEE	wrap	1	48	0.0	1L4' T8 28w/ELEE HI/NEW	new wrap	1	33	0.0	0.0	30	1,988
IN	Interior	2367	Wayne Hills-High School	Classroom 236	2	4L4' T8 32w/EL-8'	wrap	6	112	0.7	2L4' T8 28w/ELEE HI/NEW-8'	new wrap	6	64	0.4	0.3	573	1,988
IN	Interior	2368	Wayne Hills-High School	Classroom 236	2	2L4' T8 28w/ELEE	wrap	2	48	0.1	1L4' T8 28w/ELEE HI/NEW	new wrap	2	33	0.1	0.0	60	1,988
IN	Interior	2369	Wayne Hills-High School	Classroom 237	2	4L4' T8 32w/EL-8'	wrap	3	112	0.3	2L4' T8 28w/ELEE HI/NEW-8'	new wrap	3	64	0.2	0.1	286	1,988
IN	Interior	2370	Wayne Hills-High School	Classroom 237	2	2L4' T8 28w/ELEE	wrap	1	48	0.0	1L4' T8 28w/ELEE HI/NEW	new wrap	1	33	0.0	0.0	30	1,988
IN	Interior	2371	Wayne Hills-High School	Classroom 237	2	4L4' T8 32w/EL-8'	wrap	6	112	0.7	2L4' T8 28w/ELEE HI/NEW-8'	new wrap	6	64	0.4	0.3	573	1,988
IN	Interior	2372	Wayne Hills-High School	Classroom 237	2	2L4' T8 28w/ELEE	wrap	2	48	0.1	1L4' T8 28w/ELEE HI/NEW	new wrap	2	33	0.1	0.0	60	1,988
IN	Interior	2373	Wayne Hills-High School	Classroom 238	2	3L4' T8 32w/EL	trof acr	4	88	0.4	2L4' T8 28w/ELEE/RFL	rlrb RT8 kit	4	48	0.2	0.2	318	1,988
IN	Interior	2374	Wayne Hills-High School	Classroom 238	2	3L4' T8 32w/EL	trof acr	9	88	0.8	2L4' T8 28w/ELEE/RFL	rlrb RT8 kit	9	48	0.4	0.4	716	1,988
IN	Interior	2375	Wayne Hills-High School	Office 238	2	4L4' T8 32w/EL-8'	wrap	1	112	0.1	2L4' T8 28w/ELEE HI/NEW-8'	new wrap	1	64	0.1	0.0	136	2,840
IN	Interior	2376	Wayne Hills-High School	Office 238	2	2L4' T8 28w/ELEE	wrap	1	48	0.0	1L4' T8 28w/ELEE HI/NEW	new wrap	1	33	0.0	0.0	43	2,840
IN	Interior	2377	Wayne Hills-High School	Classroom 239	2	4L4' T8 32w/EL-8'	wrap	2	112	0.2	2L4' T8 28w/ELEE HI/NEW-8'	new wrap	2	64	0.1	0.1	191	1,988
IN	Interior	2378	Wayne Hills-High School	Classroom 239	2	2L4' T8 28w/ELEE	wrap	1	48	0.0	1L4' T8 28w/ELEE HI/NEW	new wrap	1	33	0.0	0.0	30	1,988
IN	Interior	2379	Wayne Hills-High School	Classroom 239	2	4L4' T8 32w/EL-8'	wrap	3	112	0.3	2L4' T8 28w/ELEE HI/NEW-8'	new wrap	3	64	0.2	0.1	286	1,988
IN	Interior	2380	Wayne Hills-High School	Classroom 239	2	2L4' T8 28w/ELEE	wrap	2	48	0.1	1L4' T8 28w/ELEE HI/NEW	new wrap	2	33	0.1	0.0	60	1,988
IN	Interior	2381	Wayne Hills-High School	Classroom 240	2	4L4' T8 32w/EL-8'	wrap	2	112	0.2	2L4' T8 28w/ELEE HI/NEW-8'	new wrap	2	64	0.1	0.1	191	1,988
IN	Interior	2382	Wayne Hills-High School	Classroom 240	2	2L4' T8 28w/ELEE	wrap	1	48	0.0	1L4' T8 28w/ELEE HI/NEW	new wrap	1	33	0.0	0.0	30	1,988
IN	Interior	2383	Wayne Hills-High School	Classroom 240	2	4L4' T8 32w/EL-8'	wrap	3	112	0.3	2L4' T8 28w/ELEE HI/NEW-8'	new wrap	3	64	0.2	0.1	286	1,988
IN	Interior	2384	Wayne Hills-High School	Classroom 240	2	2L4' T8 28w/ELEE	wrap	2	48	0.1	1L4' T8 28w/ELEE HI/NEW	new wrap	2	33	0.1	0.0	60	1,988
IN	Interior	2385	Wayne Hills-High School	Office 240	2	4L4' T8 32w/EL-8'	wrap	1	112	0.1	2L4' T8 28w/ELEE HI/NEW-8'	new wrap	1	64	0.1	0.0	136	2,840
IN	Interior	2386	Wayne Hills-High School	Office 240	2	2L4' T8 28w/ELEE	wrap	1	48	0.0	1L4' T8 28w/ELEE HI/NEW	new wrap	1	33	0.0	0.0	43	2,840
IN	Interior	2387	Wayne Hills-High School	Classroom 241	2	6L4' T8 32w/EL-8'	indirect	4	180	0.7	6L4' T8 28w/ELEE LO-8'	rlrb	4	126	0.5	0.2	429	1,988
IN	Interior	2388	Wayne Hills-High School	Classroom 241	2	3L4' T8 32w/EL	indirect	1	88	0.1	3L4' T8 28w/ELEE LO	rlrb	1	63	0.1	0.0	50	1,988
IN	Interior	2389	Wayne Hills-High School	Classroom 241	2	6L4' T8 32w/EL-8'	indirect	7	180	1.3	6L4' T8 28w/ELEE LO-8'	rlrb	7	126	0.9	0.4	1,074	2,840
IN	Interior	2390	Wayne Hills-High School	Classroom 241	2	3L4' T8 32w/EL	indirect	1	88	0.1	3L4' T8 28w/ELEE LO	rlrb	1	63	0.1	0.0	71	2,840
IN	Interior	2391	Wayne Hills-High School	Hall 235 - 241	2	3L2' T8 17w/EL	trof acr	21	47	1.0	3L2' T8 15w/ELEE LO	rlrb	21	39	0.8	0.2	612	3,640
IN	Interior	2392	Wayne Hills-High School	Hall 235 To 294	2	2L4' T8 32w/EL	trof acr	9	60	0.5	2L4' T8 28w/ELEE LO	rlrb	9	42	0.4	0.2	590	3,640
IN	Interior	2393	Wayne Hills-High School	Stair By 294	s	150W METAL HALIDE	indirect	4	190	0.8	NO RETRO	no change		190	0.8			3,640
IN	Interior	2394	Wayne Hills-High School	Stair By 294	s	2L4' T8 28w/ELEE	trof acr	2	48	0.1	2L4' T8 28w/ELEE LO	rlrb	2	42	0.1	0.0	44	3,640
IN	Interior	2395	Wayne Hills-High School	Classroom 294	2	3L4' T8 32w/EL	trof para dbl switc	9	88	0.8	2L4' T8 28w/ELEE/RFL	rlrb RT8 kit	9	48	0.4	0.4	716	1,988
IN	Interior	2396	Wayne Hills-High School	Classroom 295	2	4L4' T8 32w/EL	trof para dbl switc	8	112	0.9	2L4' T8 28w/ELEE/RFL	rlrb RT8 kit	8	48	0.4	0.5	1,018	1,988
IN	Interior	2397	Wayne Hills-High School	Classroom 295	2	4L4' T8 32w/EL	trof para dbl switc	1	112	0.1	2L4' T8 28w/ELEE/RFL	rlrb RT8 kit	1	48	0.0	0.1	182	2,840
IN	Interior	2398	Wayne Hills-High School	Classroom 293	2	4L4' T8 32w/EL	trof para dbl switc	9	112	1.0	2L4' T8 28w/ELEE/RFL	rlrb RT8 kit	9	48	0.4	0.6	1,145	1,988
IN	Interior	2399	Wayne Hills-High School	Classroom 292	2	4L4' T8 32w/EL	trof para dbl switc	10	112	1.1	2L4' T8 28w/ELEE/RFL	rlrb RT8 kit	10	48	0.5	0.6	1,272	1,988
IN	Interior	2400	Wayne Hills-High School	Classroom 292	2	4L4' T8 32w/EL	trof para dbl switc	5	112	0.6	2L4' T8 28w/ELEE/RFL	rlrb RT8 kit	5	48	0.2	0.3	636	1,988

In or Out	ECM	Line	Building Name	Location	Fl	Pre Fixture Description	Pre Fixture Style	Pre Qty	Pre Watts	Pre kW	Post Fixture Description	Post Fixture Style	Post Qty	Post Watts	Post kW	kW Saved	kWH Saved	Annual Hours
IN	Interior	2401	Wayne Hills-High School	Classroom 291	2	4L4' T8 32w/EL	trof para dbl switc	9	112	1.0	2L4' T8 28w/ELEE/RFL	rlrb RT8 kit	9	48	0.4	0.6	1,145	1,988
IN	Interior	2402	Wayne Hills-High School	Storage 289 Sc	2	2L4' T8 32w/EL	wrap	3	60	0.2	1L4' T8 28w/ELEE HI/NEW	new wrap	3	33	0.1	0.1	28	350
IN	Interior	2403	Wayne Hills-High School	Bath 289Gt	2	2L2' F40 BIAX/EL	trof acr	1	72	0.1	2L2' F40BIAX/EL28W	rlrb	1	63	0.1	0.0	33	3,640
IN	Interior	2404	Wayne Hills-High School	Bath 289Gt	2	2L4' T8 32w/EL	trof acr	3	60	0.2	2L4' T8 28w/ELEE LO	rlrb	3	42	0.1	0.1	197	3,640
IN	Interior	2405	Wayne Hills-High School	Closet 289 Cc	2	2L4' T8 32w/EL	old wrap	1	60	0.1	1L4' T8 28w/ELEE HI/NEW	new wrap	1	33	0.0	0.0	14	500
IN	Interior	2406	Wayne Hills-High School	Bath 289Bt	2	2L2' F40 BIAX/EL	trof acr	1	72	0.1	2L2' F40BIAX/EL28W	rlrb	1	63	0.1	0.0	33	3,640
IN	Interior	2407	Wayne Hills-High School	Bath 289Bt	2	2L4' T8 32w/EL	trof acr	3	60	0.2	2L4' T8 28w/ELEE LO	rlrb	3	42	0.1	0.1	197	3,640
IN	Interior	2408	Wayne Hills-High School	Classroom 290	2	4L4' T8 32w/EL	trof para dbl switc	4	112	0.4	2L4' T8 28w/ELEE/RFL	rlrb RT8 kit	4	48	0.2	0.3	509	1,988
IN	Interior	2409	Wayne Hills-High School	Classroom 290	2	4L4' T8 32w/EL	trof para dbl switc	1	112	0.1	2L4' T8 28w/ELEE/RFL	rlrb RT8 kit	1	48	0.0	0.1	127	1,988
IN	Interior	2410	Wayne Hills-High School	Classroom 290	2	4L4' T8 32w/EL	trof para dbl switc	10	112	1.1	2L4' T8 28w/ELEE/RFL	rlrb RT8 kit	10	48	0.5	0.6	1,272	1,988
IN	Interior	2411	Wayne Hills-High School	Storage 290	2	3L4' T8 32w/EL	trof parabolic	1	88	0.1	2L4' T8 28w/ELEE HI/RFL	rlrb rfl	1	64	0.1	0.0	8	350
IN	Interior	2412	Wayne Hills-High School	Office 290	2	4L4' T8 32w/EL	trof para dbl switc	2	112	0.2	4L4' T8 28w/ELEE LO (2Lx2 BAI	rlrb dbl switched	2	84	0.2	0.1	111	1,988
IN	Interior	2413	Wayne Hills-High School	Office 290	2	2L4' T8 U/EL	trof parabolic	1	60	0.1	2L2' T8 15w/ELEE HI/RFL	rlrb rfl	1	33	0.0	0.0	54	1,988
IN	Interior	2414	Wayne Hills-High School	Classroom 287	2	3L4' T8 32w/EL	trof para dbl switc	11	88	1.0	2L4' T8 28w/ELEE/RFL	rlrb RT8 kit	11	48	0.5	0.4	875	1,988
IN	Interior	2415	Wayne Hills-High School	Classroom 287	2	3L4' T8 32w/EL	trof para dbl switc	1	88	0.1	2L4' T8 28w/ELEE/RFL	rlrb RT8 kit	1	48	0.0	0.0	80	1,988
IN	Interior	2416	Wayne Hills-High School	Classroom 286	2	4L4' T8 32w/EL	trof para dbl switc	6	112	0.7	2L4' T8 28w/ELEE/RFL	rlrb RT8 kit	6	48	0.3	0.4	763	1,988
IN	Interior	2417	Wayne Hills-High School	Classroom 286	2	4L4' T8 32w/EL	trof para dbl switc	12	112	1.3	2L4' T8 28w/ELEE/RFL	rlrb RT8 kit	12	48	0.6	0.8	1,527	1,988
IN	Interior	2418	Wayne Hills-High School	Classroom 285	2	3L4' T8 32w/EL	trof para dbl switc	12	88	1.1	2L4' T8 28w/ELEE/RFL	rlrb RT8 kit	12	48	0.6	0.5	954	1,988
IN	Interior	2419	Wayne Hills-High School	Stair By 285	s	150W METAL HALIDE	indirect	4	190	0.8	NO RETRO	no change		190	0.8			3,640
IN	Interior	2420	Wayne Hills-High School	Stair By 285	s	2L4' T8 28w/ELEE	trof acr	2	48	0.1	2L4' T8 28w/ELEE LO	rlrb	2	42	0.1	0.0	44	3,640
IN	Interior	2421	Wayne Hills-High School	Hall 295 To 256	2	2L4' T8 32w/EL	trof acr	24	60	1.4	2L4' T8 28w/ELEE LO	rlrb	24	42	1.0	0.4	1,101	2,548
IN	Interior	2422	Wayne Hills-High School	Hall 295 To 256	2	4L4' T8 32w/EL	decorative	4	112	0.4	4L4' T8 28w/ELEE LO	rlrb	4	83	0.3	0.1	422	3,640
IN	Interior	2423	Wayne Hills-High School	Hall Foot Bridge	2	3L2' T8 17w/EL	trof acr	3	47	0.1	3L2' T8 15w/ELEE LO	rlrb	3	39	0.1	0.0	87	3,640
IN	Interior	2424	Wayne Hills-High School	Hall Foot Bridge	2	13W COMPACT HARDWI	can rec 6"	2	15	0.0	NO RETRO	no change needed		15	0.0			3,640
IN	Interior	2425	Wayne Hills-High School	Office 284 Bo	2	3L4' T8 32w/EL	trof acr	4	88	0.4	3L4' T8 28w/ELEE LO	rlrb	4	63	0.3	0.1	284	2,840
IN	Interior	2426	Wayne Hills-High School	Office 284 Ao	2	3L4' T8 32w/EL	trof acr	4	88	0.4	3L4' T8 28w/ELEE LO	rlrb	4	63	0.3	0.1	284	2,840
IN	Interior	2427	Wayne Hills-High School	Hall Stair West 4 To Stair East 5	2	3L2' T8 17w/EL	trof acr	28	47	1.3	3L2' T8 15w/ELEE LO	rlrb	28	39	1.1	0.2	815	3,640
IN	Interior	2428	Wayne Hills-High School	Hall Display Case	2	4L4' T12 EE/EEMAG-8'	old wrap	2	140	0.3	2L4' T8 28w/ELEE HI/NEW-8'	new wrap	2	64	0.1	0.2	553	3,640
IN	Interior	2429	Wayne Hills-High School	Hall Display Case	2	2L4' T12 EE/EEMAG	old wrap	1	70	0.1	1L4' T8 28w/ELEE HI/NEW	new wrap	1	33	0.0	0.0	135	3,640
IN	Interior	2430	Wayne Hills-High School	Classroom 283	2	3L4' T8 32w/EL	trof acr	19	88	1.7	2L4' T8 28w/ELEE/RFL	rlrb RT8 kit	19	48	0.9	0.8	1,511	1,988
IN	Interior	2431	Wayne Hills-High School	Closet Pans	2	4L4' T8 32w/EL	trof acr	1	112	0.1	2L4' T8 28w/ELEE HI/RFL	rlrb rfl	1	64	0.1	0.0	24	500
IN	Interior	2432	Wayne Hills-High School	Classroom 282	2	3L4' T8 32w/EL	trof acr	31	88	2.7	2L4' T8 28w/ELEE/RFL	rlrb RT8 kit	31	48	1.5	1.2	2,465	1,988
IN	Interior	2433	Wayne Hills-High School	Classroom 282	2	3L4' T8 32w/EL	trof acr	1	88	0.1	2L4' T8 28w/ELEE/RFL	rlrb RT8 kit	1	48	0.0	0.0	80	1,988
IN	Interior	2434	Wayne Hills-High School	Stair East 5	s	3L2' T8 17w/EL	trof acr	3	47	0.1	3L2' T8 15w/ELEE LO	rlrb	3	39	0.1	0.0	87	3,640
IN	Interior	2435	Wayne Hills-High School	Stair East 5	s	2L4' T8 28w/ELEE	box acrylic	2	48	0.1	2L4' T8 28w/ELEE LO/NEW	new wrap wide	2	42	0.1	0.0	44	3,640
IN	Interior	2436	Wayne Hills-High School	Office 280	2	3L4' T8 32w/EL	trof acr	4	88	0.4	3L4' T8 28w/ELEE LO	rlrb	4	63	0.3	0.1	284	2,840
IN	Interior	2437	Wayne Hills-High School	Mechanical 279	2	3L4' T8 32w/EL	trof acr	1	88	0.1	3L4' T8 28w/ELEE LO	rlrb	1	63	0.1	0.0	13	500
IN	Interior	2438	Wayne Hills-High School	Hall 283 To 274	2	3L2' T8 17w/EL	trof acr	7	47	0.3	3L2' T8 15w/ELEE LO	rlrb	7	39	0.3	0.1	143	2,548
IN	Interior	2439	Wayne Hills-High School	Office 278	2	3L4' T8 32w/EL	trof acr	4	88	0.4	3L4' T8 28w/ELEE LO	rlrb	4	63	0.3	0.1	284	2,840
IN	Interior	2440	Wayne Hills-High School	Mechanical 240B	2	23W COMPACT HARDWI	dome	6	24	0.1	NO RETRO	no change needed		24	0.1			500
IN	Interior	2441	Wayne Hills-High School	Stair 240B	s	2L4' T8 U/EL	trof acr	3	60	0.2	2L2' T8 15w/ELEE HI/RFL	rlrb rfl	3	33	0.1	0.1	295	3,640
IN	Interior	2442	Wayne Hills-High School	Stair 240B	s	2L4' T8 28w/ELEE	box acrylic	2	48	0.1	2L4' T8 28w/ELEE LO/NEW	new wrap wide	2	42	0.1	0.0	44	3,640
IN	Interior	2443	Wayne Hills-High School	Classroom 277	2	2L4' T8 32w/EL	trof acr	4	60	0.2	2L4' T8 28w/ELEE/RFL	rlrb RT8 kit	4	48	0.2	0.0	95	1,988
IN	Interior	2444	Wayne Hills-High School	Classroom 277	2	3L4' T8 32w/EL	trof acr	12	88	1.1	2L4' T8 28w/ELEE/RFL	rlrb RT8 kit	12	48	0.6	0.5	954	1,988
IN	Interior	2445	Wayne Hills-High School	Classroom 276	2	2L4' T8 32w/EL	trof acr	4	60	0.2	2L4' T8 28w/ELEE/RFL	rlrb RT8 kit	4	48	0.2	0.0	95	1,988
IN	Interior	2446	Wayne Hills-High School	Classroom 276	2	3L4' T8 32w/EL	trof acr	12	88	1.1	2L4' T8 28w/ELEE/RFL	rlrb RT8 kit	12	48	0.6	0.5	954	1,988
IN	Interior	2447	Wayne Hills-High School	Hall 277 To 268	2	3L2' T8 17w/EL	trof acr	22	47	1.0	3L2' T8 15w/ELEE LO	rlrb	22	39	0.9	0.2	448	2,548
IN	Interior	2448	Wayne Hills-High School	Classroom 275	2	2L4' T8 32w/EL	trof acr	4	60	0.2	2L4' T8 28w/ELEE/RFL	rlrb RT8 kit	4	48	0.2	0.0	95	1,988

In or Out	ECM	Line	Building Name	Location	Fl	Pre Fixture Description	Pre Fixture Style	Pre Qty	Pre Watts	Pre kW	Post Fixture Description	Post Fixture Style	Post Qty	Post Watts	Post kW	kW Saved	kWH Saved	Annual Hours
IN	Interior	2449	Wayne Hills-High School	Classroom 275	2	3L4' T8 32w/EL	trof acr	12	88	1.1	2L4' T8 28w/ELEE/RFL	rlrb RT8 kit	12	48	0.6	0.5	954	1,988
IN	Interior	2450	Wayne Hills-High School	Classroom 274	2	2L4' T8 32w/EL	trof acr	4	60	0.2	2L4' T8 28w/ELEE/RFL	rlrb RT8 kit	4	48	0.2	0.0	95	1,988
IN	Interior	2451	Wayne Hills-High School	Classroom 274	2	3L4' T8 32w/EL	trof acr	12	88	1.1	2L4' T8 28w/ELEE/RFL	rlrb RT8 kit	12	48	0.6	0.5	954	1,988
IN	Interior	2452	Wayne Hills-High School	Classroom 273	2	2L4' T8 32w/EL	trof acr	4	60	0.2	2L4' T8 28w/ELEE/RFL	rlrb RT8 kit	4	48	0.2	0.0	95	1,988
IN	Interior	2453	Wayne Hills-High School	Classroom 273	2	3L4' T8 32w/EL	trof acr	12	88	1.1	2L4' T8 28w/ELEE/RFL	rlrb RT8 kit	12	48	0.6	0.5	954	1,988
IN	Interior	2454	Wayne Hills-High School	Classroom 271	2	2L4' T8 32w/EL	trof acr	4	60	0.2	2L4' T8 28w/ELEE/RFL	rlrb RT8 kit	4	48	0.2	0.0	95	1,988
IN	Interior	2455	Wayne Hills-High School	Classroom 271	2	3L4' T8 32w/EL	trof acr	12	88	1.1	2L4' T8 28w/ELEE/RFL	rlrb RT8 kit	12	48	0.6	0.5	954	1,988
IN	Interior	2456	Wayne Hills-High School	Classroom 269	2	2L4' T8 32w/EL	trof acr	4	60	0.2	2L4' T8 28w/ELEE/RFL	rlrb RT8 kit	4	48	0.2	0.0	95	1,988
IN	Interior	2457	Wayne Hills-High School	Classroom 269	2	3L4' T8 32w/EL	trof acr	12	88	1.1	2L4' T8 28w/ELEE/RFL	rlrb RT8 kit	12	48	0.6	0.5	954	1,988
IN	Interior	2458	Wayne Hills-High School	Classroom 272	2	4L4' T8 32w/EL	trof acr	3	112	0.3	2L4' T8 28w/ELEE/RFL	rlrb RT8 kit	3	48	0.1	0.2	382	1,988
IN	Interior	2459	Wayne Hills-High School	Classroom 272	2	3L4' T8 32w/EL	trof acr	18	88	1.6	2L4' T8 28w/ELEE/RFL	rlrb RT8 kit	18	48	0.9	0.7	1,431	1,988
IN	Interior	2460	Wayne Hills-High School	Classroom 272	2	13W COMPACT HARDWI	can rec 6"	2	15	0.0	NO RETRO	no change needed		15	0.0			1,988
IN	Interior	2461	Wayne Hills-High School	Office Prep	2	3L4' T8 32w/EL	trof acr	4	88	0.4	3L4' T8 28w/ELEE LO	rlrb	4	63	0.3	0.1	284	2,840
IN	Interior	2462	Wayne Hills-High School	Office Prep	2	13W COMPACT HARDWI	can rec 6"	1	15	0.0	NO RETRO	no change needed		15	0.0			2,840
IN	Interior	2463	Wayne Hills-High School	Classroom 272	2	3L4' T8 32w/EL	trof acr	21	88	1.8	2L4' T8 28w/ELEE/RFL	rlrb RT8 kit	21	48	1.0	0.8	1,670	1,988
IN	Interior	2464	Wayne Hills-High School	Classroom 270	2	3L4' T8 32w/EL	trof acr	11	88	1.0	2L4' T8 28w/ELEE/RFL	rlrb RT8 kit	11	48	0.5	0.4	875	1,988
IN	Interior	2465	Wayne Hills-High School	Classroom 267	2	3L4' T8 32w/EL	trof acr	20	88	1.8	2L4' T8 28w/ELEE/RFL	rlrb RT8 kit	20	48	1.0	0.8	1,590	1,988
IN	Interior	2466	Wayne Hills-High School	Stair North 1	s	2L4' T8 U/EL	trof acr	4	60	0.2	2L2' T8 15w/ELEE HI/RFL	rlrb rfl	4	33	0.1	0.1	393	3,640
IN	Interior	2467	Wayne Hills-High School	Stair North 1	s	2L4' T8 28w/ELEE	box acrylic	2	48	0.1	2L4' T8 28w/ELEE LO/NEW	new wrap wide	2	42	0.1	0.0	44	3,640
IN	Interior	2468	Wayne Hills-High School	Classroom 268	2	3L4' T8 32w/EL	trof acr	23	88	2.0	2L4' T8 28w/ELEE/RFL	rlrb RT8 kit	23	48	1.1	0.9	1,829	1,988
IN	Interior	2469	Wayne Hills-High School	Classroom 268	2	3L4' T8 32w/EL	trof acr	1	88	0.1	2L4' T8 28w/ELEE/RFL	rlrb RT8 kit	1	48	0.0	0.0	80	1,988
IN	Interior	2470	Wayne Hills-High School	Classroom 268	2	3L4' T8 32w/EL	trof acr	11	88	1.0	2L4' T8 28w/ELEE/RFL	rlrb RT8 kit	11	48	0.5	0.4	875	1,988
IN	Interior	2471	Wayne Hills-High School	Classroom 266	2	2L4' T8 32w/EL	trof acr	3	60	0.2	2L4' T8 28w/ELEE/RFL	rlrb RT8 kit	3	48	0.1	0.0	72	1,988
IN	Interior	2472	Wayne Hills-High School	Classroom 266	2	3L4' T8 32w/EL	trof acr	9	88	0.8	2L4' T8 28w/ELEE/RFL	rlrb RT8 kit	9	48	0.4	0.4	716	1,988
IN	Interior	2473	Wayne Hills-High School	Classroom 266	2	3L4' T8 32w/EL	trof acr	3	88	0.3	2L4' T8 28w/ELEE/RFL	rlrb RT8 kit	3	48	0.1	0.1	239	1,988
IN	Interior	2474	Wayne Hills-High School	Classroom 266	2	2L4' T8 28w/ELEE	trof acr	1	48	0.0	2L4' T8 28w/ELEE/RFL	rlrb RT8 kit	1	48	0.0			1,988
IN	Interior	2475	Wayne Hills-High School	Hall 266 To 264	2	3L2' T8 17w/EL	trof acr	5	47	0.2	3L2' T8 15w/ELEE LO	rlrb	5	39	0.2	0.0	102	2,548
IN	Interior	2476	Wayne Hills-High School	Storage 267 Sc	2	4L4' T8 32w/EL-8'	wrap	1	112	0.1	2L4' T8 28w/ELEE HI/NEW-8'	new wrap	1	64	0.1	0.0	24	500
IN	Interior	2477	Wayne Hills-High School	Storage 267 Sc	2	2L4' T8 28w/ELEE	wrap	2	48	0.1	1L4' T8 28w/ELEE HI/NEW	new wrap	2	33	0.1	0.0	15	500
IN	Interior	2478	Wayne Hills-High School	Bath 263 Wt	2	2L4' T8 28w/ELEE	wrap	1	48	0.0	1L4' T8 28w/ELEE HI/NEW	new wrap	1	33	0.0	0.0	55	3,640
IN	Interior	2479	Wayne Hills-High School	Bath 263 Wt	2	4L4' T8 32w/EL-8'	wrap	1	112	0.1	2L4' T8 28w/ELEE HI/NEW-8'	new wrap	1	64	0.1	0.0	175	3,640
IN	Interior	2480	Wayne Hills-High School	Bath 263 Wt	2	2L2' T8 17w/EL	vanity	1	33	0.0	2L2' T8 15w/ELEE LO/NEW	new vanity	1	24	0.0	0.0	33	3,640
IN	Interior	2481	Wayne Hills-High School	Classroom 265	2	2L4' T8 32w/EL	trof acr	3	60	0.2	2L4' T8 28w/ELEE/RFL	rlrb RT8 kit	3	48	0.1	0.0	72	1,988
IN	Interior	2482	Wayne Hills-High School	Classroom 265	2	3L4' T8 32w/EL	trof acr	9	88	0.8	2L4' T8 28w/ELEE/RFL	rlrb RT8 kit	9	48	0.4	0.4	716	1,988
IN	Interior	2483	Wayne Hills-High School	Classroom 265	2	3L4' T8 32w/EL	trof acr	3	88	0.3	2L4' T8 28w/ELEE/RFL	rlrb RT8 kit	3	48	0.1	0.1	239	1,988
IN	Interior	2484	Wayne Hills-High School	Classroom 265	2	2L4' T8 28w/ELEE	trof acr	1	48	0.0	2L4' T8 28w/ELEE/RFL	rlrb RT8 kit	1	48	0.0			1,988
IN	Interior	2485	Wayne Hills-High School	Bath 263 Mt	2	2L4' T8 28w/ELEE	wrap	1	48	0.0	1L4' T8 28w/ELEE HI/NEW	new wrap	1	33	0.0	0.0	55	3,640
IN	Interior	2486	Wayne Hills-High School	Bath 263 Mt	2	4L4' T8 32w/EL-8'	wrap	1	112	0.1	2L4' T8 28w/ELEE HI/NEW-8'	new wrap	1	64	0.1	0.0	175	3,640
IN	Interior	2487	Wayne Hills-High School	Bath 263 Mt	2	2L2' T8 17w/EL	vanity	1	33	0.0	2L2' T8 15w/ELEE LO/NEW	new vanity	1	24	0.0	0.0	33	3,640
IN	Interior	2488	Wayne Hills-High School	Classroom 264	2	2L4' T8 32w/EL	trof acr	3	60	0.2	2L4' T8 28w/ELEE/RFL	rlrb RT8 kit	3	48	0.1	0.0	72	1,988
IN	Interior	2489	Wayne Hills-High School	Classroom 264	2	3L4' T8 32w/EL	trof acr	9	88	0.8	2L4' T8 28w/ELEE/RFL	rlrb RT8 kit	9	48	0.4	0.4	716	1,988
IN	Interior	2490	Wayne Hills-High School	Classroom 264	2	3L4' T8 32w/EL	trof acr	3	88	0.3	2L4' T8 28w/ELEE/RFL	rlrb RT8 kit	3	48	0.1	0.1	239	1,988
IN	Interior	2491	Wayne Hills-High School	Classroom 264	2	2L4' T8 28w/ELEE	trof acr	1	48	0.0	2L4' T8 28w/ELEE/RFL	rlrb RT8 kit	1	48	0.0			1,988
IN	Interior	2492	Wayne Hills-High School	Office 262 Copy	2	3L4' T8 32w/EL	trof acr	6	88	0.5	3L4' T8 28w/ELEE LO	rlrb	6	63	0.4	0.2	426	2,840
IN	Interior	2493	Wayne Hills-High School	Office 262 Ao	2	3L4' T8 32w/EL	trof acr	6	88	0.5	3L4' T8 28w/ELEE LO	rlrb	6	63	0.4	0.2	426	2,840
IN	Interior	2494	Wayne Hills-High School	Stair West 4	s	2L4' T8 32w/EL	box acrylic	4	60	0.2	2L4' T8 28w/ELEE LO/NEW	new wrap wide	4	42	0.2	0.1	262	3,640
IN	Interior	2495	Wayne Hills-High School	Bath 263 Gt	2	3L2' T8 17w/EL	trof acr	5	47	0.2	3L2' T8 15w/ELEE LO	rlrb	5	39	0.2	0.0	146	3,640
IN	Interior	2496	Wayne Hills-High School	Closet Clean	2	1L4' T8 32w/EL	old wrap	1	30	0.0	1L4' T8 28w/ELEE HI/NEW	new wrap	1	33	0.0	0.0	-2	500

In or Out	ECM	Line	Building Name	Location	Fl	Pre Fixture Description	Pre Fixture Style	Pre Qty	Pre Watts	Pre kW	Post Fixture Description	Post Fixture Style	Post Qty	Post Watts	Post kW	kW Saved	kWH Saved	Annual Hours
IN	Interior	2497	Wayne Hills-High School	Bath 263 Bt	2	3L2' T8 17w/EL	trof acr	5	47	0.2	3L2' T8 15w/ELEE LO	rlrb	5	39	0.2	0.0	146	3,640
IN	Interior	2498	Wayne Hills-High School	Classroom 260	2	2L4' T8 32w/EL	trof acr	3	60	0.2	2L4' T8 28w/ELEE/RFL	rlrb RT8 kit	3	48	0.1	0.0	72	1,988
IN	Interior	2499	Wayne Hills-High School	Classroom 260	2	3L4' T8 32w/EL	trof acr	9	88	0.8	2L4' T8 28w/ELEE/RFL	rlrb RT8 kit	9	48	0.4	0.4	716	1,988
IN	Interior	2500	Wayne Hills-High School	Classroom 260	2	3L4' T8 32w/EL	trof acr	3	88	0.3	2L4' T8 28w/ELEE/RFL	rlrb RT8 kit	3	48	0.1	0.1	239	1,988
IN	Interior	2501	Wayne Hills-High School	Classroom 260	2	2L4' T8 28w/ELEE	trof acr	1	48	0.0	2L4' T8 28w/ELEE/RFL	rlrb RT8 kit	1	48	0.0			1,988
IN	Interior	2502	Wayne Hills-High School	Classroom 258	2	2L4' T8 32w/EL	trof acr	3	60	0.2	2L4' T8 28w/ELEE/RFL	rlrb RT8 kit	3	48	0.1	0.0	72	1,988
IN	Interior	2503	Wayne Hills-High School	Classroom 258	2	3L4' T8 32w/EL	trof acr	9	88	0.8	2L4' T8 28w/ELEE/RFL	rlrb RT8 kit	9	48	0.4	0.4	716	1,988
IN	Interior	2504	Wayne Hills-High School	Classroom 258	2	3L4' T8 32w/EL	trof acr	3	88	0.3	2L4' T8 28w/ELEE/RFL	rlrb RT8 kit	3	48	0.1	0.1	239	1,988
IN	Interior	2505	Wayne Hills-High School	Classroom 258	2	2L4' T8 28w/ELEE	trof acr	1	48	0.0	2L4' T8 28w/ELEE/RFL	rlrb RT8 kit	1	48	0.0			1,988
IN	Interior	2506	Wayne Hills-High School	Classroom 261	2	6L4' T8 32w/EL-8'	indirect	12	180	2.2	6L4' T8 28w/ELEE LO-8'	rlrb	12	126	1.5	0.6	1,840	2,840
IN	Interior	2507	Wayne Hills-High School	Closet Clean	2	60W INCANDESCENT	old jar	1	60	0.1	13 WATT LED/NEW	new LED jar exterior	1	13	0.0	0.0	24	500
IN	Interior	2508	Wayne Hills-High School	Classroom 256	2	4L4' T8 32w/EL-8'	wrap	4	112	0.4	2L4' T8 28w/ELEE HI/NEW-8'	new wrap	4	64	0.3	0.2	382	1,988
IN	Interior	2509	Wayne Hills-High School	Classroom 256	2	2L4' T8 28w/ELEE	wrap	2	48	0.1	1L4' T8 28w/ELEE HI/NEW	new wrap	2	33	0.1	0.0	60	1,988
IN	Interior	2510	Wayne Hills-High School	Classroom 256	2	4L4' T8 32w/EL-8'	wrap	6	112	0.7	2L4' T8 28w/ELEE HI/NEW-8'	new wrap	6	64	0.4	0.3	573	1,988
IN	Interior	2511	Wayne Hills-High School	Classroom 256	2	2L4' T8 28w/ELEE	wrap	2	48	0.1	1L4' T8 28w/ELEE HI/NEW	new wrap	2	33	0.1	0.0	60	1,988
IN	Interior	2512	Wayne Hills-High School	Closet Clean	2	60W INCANDESCENT	old jar	1	60	0.1	13 WATT LED/NEW	new LED jar exterior	1	13	0.0	0.0	24	500
IN	Interior	2513	Wayne Hills-High School	Stair By 257	s	2L2' F40 BIAX/EL	trof acr	2	72	0.1	2L2' F40BIAX/EL28W	rlrb	2	63	0.1	0.0	66	3,640
IN	Interior	2514	Wayne Hills-High School	Stair By 257	s	2L4' T8 U/EL	trof acr	1	60	0.1	2L2' T8 15w/ELEE HI/RFL	rlrb rfl	1	33	0.0	0.0	98	3,640
IN	Interior	2515	Wayne Hills-High School	Stair By 257	s	3L4' T8 32w/EL	trof acr	1	88	0.1	3L4' T8 28w/ELEE LO	rlrb	1	63	0.1	0.0	91	3,640
IN	Interior	2516	Wayne Hills-High School	Classroom 253	2	2L4' T8 U/EL	trof acr	4	60	0.2	2L2' T8 15w/ELEE HI/RFL	rlrb RT8 kit	4	33	0.1	0.1	307	2,840
IN	Interior	2517	Wayne Hills-High School	Classroom 253	2	4L4' T8 32w/EL-8'	wrap	3	112	0.3	2L4' T8 28w/ELEE HI/NEW-8'	new wrap	3	64	0.2	0.1	409	2,840
IN	Interior	2518	Wayne Hills-High School	Classroom 253	2	2L4' T8 28w/ELEE	wrap	1	48	0.0	1L4' T8 28w/ELEE HI/NEW	new wrap	1	33	0.0	0.0	43	2,840
IN	Interior	2519	Wayne Hills-High School	Classroom 253	2	4L4' T8 32w/EL-8'	wrap	6	112	0.7	2L4' T8 28w/ELEE HI/NEW-8'	new wrap	6	64	0.4	0.3	573	1,988
IN	Interior	2520	Wayne Hills-High School	Classroom 253	2	2L4' T8 28w/ELEE	wrap	2	48	0.1	1L4' T8 28w/ELEE HI/NEW	new wrap	2	33	0.1	0.0	60	1,988
IN	Interior	2521	Wayne Hills-High School	Bath 254 Gt	2	2L4' T8 28w/ELEE	wrap	2	48	0.1	1L4' T8 28w/ELEE HI/NEW	new wrap	2	33	0.1	0.0	109	3,640
IN	Interior	2522	Wayne Hills-High School	Closet Clean	2	100W INCANDESCENT	dome	1	100	0.1	23W COMPACT SI/29712/CF23	screw in	1	23	0.0	0.1	39	500
IN	Interior	2523	Wayne Hills-High School	Classroom 252	2	3L4' T8 32w/EL	trof para dbl switc	6	88	0.5	2L4' T8 28w/ELEE/RFL	rlrb RT8 kit	6	48	0.3	0.2	477	1,988
IN	Interior	2524	Wayne Hills-High School	Classroom 251	2	3L4' T8 32w/EL	trof para dbl switc	6	88	0.5	2L4' T8 28w/ELEE/RFL	rlrb RT8 kit	6	48	0.3	0.2	477	1,988
IN	Interior	2525	Wayne Hills-High School	Classroom 250	2	3L4' T8 32w/EL	trof para dbl switc	6	88	0.5	2L4' T8 28w/ELEE/RFL	rlrb RT8 kit	6	48	0.3	0.2	477	1,988
IN	Interior	2526	Wayne Hills-High School	Classroom 249	2	3L4' T8 32w/EL	trof para dbl switc	6	88	0.5	2L4' T8 28w/ELEE/RFL	rlrb RT8 kit	6	48	0.3	0.2	477	1,988
IN	Interior	2527	Wayne Hills-High School	Classroom 248	2	3L4' T8 32w/EL	trof para dbl switc	6	88	0.5	2L4' T8 28w/ELEE/RFL	rlrb RT8 kit	6	48	0.3	0.2	477	1,988
IN	Interior	2528	Wayne Hills-High School	Classroom 247	2	3L4' T8 32w/EL	trof para dbl switc	6	88	0.5	2L4' T8 28w/ELEE/RFL	rlrb RT8 kit	6	48	0.3	0.2	477	1,988
IN	Interior	2529	Wayne Hills-High School	Classroom 246	2	3L4' T8 32w/EL	trof para dbl switc	6	88	0.5	2L4' T8 28w/ELEE/RFL	rlrb RT8 kit	6	48	0.3	0.2	477	1,988
IN	Interior	2530	Wayne Hills-High School	Classroom 245	2	3L4' T8 32w/EL	trof para dbl switc	6	88	0.5	2L4' T8 28w/ELEE/RFL	rlrb RT8 kit	6	48	0.3	0.2	477	1,988
IN	Interior	2531	Wayne Hills-High School	Hall 256 To 245	2	3L2' T8 17w/EL	trof acr	14	47	0.7	3L2' T8 15w/ELEE LO	rlrb	14	39	0.5	0.1	285	2,548
IN	Interior	2532	Wayne Hills-High School	Hall 202 To 257	2	3L2' T8 17w/EL	trof acr	8	47	0.4	3L2' T8 15w/ELEE LO	rlrb	8	39	0.3	0.1	163	2,548
IN	Interior	2533	Wayne Hills-High School	Bath Men	2	2L4' T8 32w/EL	old wrap	2	60	0.1	1L4' T8 28w/ELEE HI/NEW	new wrap	2	33	0.1	0.1	197	3,640
IN	Interior	2534	Wayne Hills-High School	Gym 257 Weight Room	2	4L4' T8 32w/EL-8'	wrap	20	112	2.2	2L4' T8 28w/ELEE HI/NEW-8'	new wrap	20	64	1.3	1.0	3,302	3,440
IN	Interior	2535	Wayne Hills-High School	Gym 257 Weight Room	2	4L4' T8 32w/EL-8'	wrap	5	112	0.6	2L4' T8 28w/ELEE HI/NEW-8'	new wrap	5	64	0.3	0.2	826	3,440
IN	Interior	2536	Wayne Hills-High School	Gym 257 Weight Room	2	2x60W INCANDESCENTS	old drum	1	120	0.1	2L2' T8 15w/ELEE LO/NEW	new wrap	1	24	0.0	0.1	330	3,440
IN	Interior	2537	Wayne Hills-High School	Gym 257 Weight Room	2	2x60W INCANDESCENTS	old drum	1	120	0.1	2L2' T8 15w/ELEE LO/NEW	new wrap	1	24	0.0	0.1	330	3,440
IN	Interior	2538	Wayne Hills-High School	Mechanical 206	2	23W COMPACT HARDWI	old jar	8	24	0.2	NO RETRO	no change needed		24	0.2			500
IN	Interior	2539	Wayne Hills-High School	Classroom 202 Cardio	2	4L4' T8 32w/EL-8'	wrap	20	112	2.2	2L4' T8 28w/ELEE HI/NEW-8'	new wrap	20	64	1.3	1.0	2,726	2,840
IN	Interior	2540	Wayne Hills-High School	Classroom 202 Cardio	2	2x60W INCANDESCENTS	old drum	1	120	0.1	2L2' T8 15w/ELEE LO/NEW	new wrap	1	24	0.0	0.1	273	2,840
IN	Interior	2541	Wayne Hills-High School	Classroom 202 Cardio	2	2x60W INCANDESCENTS	old drum	1	120	0.1	2L2' T8 15w/ELEE LO/NEW	new wrap	1	24	0.0	0.1	273	2,840
IN	Interior	2542	Wayne Hills-High School	Stair 202 Cardio	s	2L4' T8 28w/ELEE	wrap	2	48	0.1	1L4' T8 28w/ELEE HI/NEW	new wrap	2	33	0.1	0.0	109	3,640
IN	Interior	2543	Wayne Hills-High School	Stair 202 Cardio	s	2L2' T8 17w/EL	wrap narrow	1	33	0.0	2L2' T8 15w/ELEE LO/NEW	new wrap	1	24	0.0	0.0	33	3,640
IN	Interior	2544	Wayne Hills-High School	Hall Foot Bridge By 201A	2	3L2' T8 17w/EL	trof acr	3	47	0.1	3L2' T8 15w/ELEE LO	rlrb	3	39	0.1	0.0	87	3,640

In or Out	ECM	Line	Building Name	Location	Fl	Pre Fixture Description	Pre Fixture Style	Pre Qty	Pre Watts	Pre kW	Post Fixture Description	Post Fixture Style	Post Qty	Post Watts	Post kW	kW Saved	kWH Saved	Annual Hours
IN	Interior	2545	Wayne Hills-High School	Hall Foot Bridge By 201A	2	13W COMPACT HARDWI	can rec 6"	2	15	0.0	NO RETRO	no change needed		15	0.0			3,640
IN	Interior	2546	Wayne Hills-High School	Stair West 3	s	2L4' T8 32w/EL	box acrylic	4	60	0.2	2L4' T8 28w/ELEE LO/NEW	new wrap wide	4	42	0.2	0.1	262	3,640
IN	Interior	2547	Wayne Hills-High School	Closet Clean	2	2x18W COMPACT HARDV	old drum	1	38	0.0	2L2' T8 15w/ELEE LO/NEW	new wrap	1	24	0.0	0.0	7	500
IN	Interior	2548	Wayne Hills-High School	Classroom 201	2	4L4' T8 32w/EL-8'	wrap	3	112	0.3	2L4' T8 28w/ELEE HI/NEW-8'	new wrap	3	64	0.2	0.1	286	1,988
IN	Interior	2549	Wayne Hills-High School	Classroom 201	2	2L4' T8 28w/ELEE	wrap	1	48	0.0	1L4' T8 28w/ELEE HI/NEW	new wrap	1	33	0.0	0.0	30	1,988
IN	Interior	2550	Wayne Hills-High School	Classroom 201	2	4L4' T8 32w/EL-8'	wrap	6	112	0.7	2L4' T8 28w/ELEE HI/NEW-8'	new wrap	6	64	0.4	0.3	573	1,988
IN	Interior	2551	Wayne Hills-High School	Classroom 201	2	2L4' T8 28w/ELEE	wrap	2	48	0.1	1L4' T8 28w/ELEE HI/NEW	new wrap	2	33	0.1	0.0	60	1,988
IN	Interior	2552	Wayne Hills-High School	Closet 202 Cc Clean	2	23W COMPACT HARDWI	old jar	1	24	0.0	NO RETRO	no change needed		24	0.0			500
IN	Interior	2553	Wayne Hills-High School	Classroom 203	2	4L4' T8 32w/EL-8'	wrap	2	112	0.2	2L4' T8 28w/ELEE HI/NEW-8'	new wrap	2	64	0.1	0.1	191	1,988
IN	Interior	2554	Wayne Hills-High School	Classroom 203	2	2L4' T8 28w/ELEE	wrap	1	48	0.0	1L4' T8 28w/ELEE HI/NEW	new wrap	1	33	0.0	0.0	30	1,988
IN	Interior	2555	Wayne Hills-High School	Classroom 203	2	4L4' T8 32w/EL-8'	wrap	4	112	0.4	2L4' T8 28w/ELEE HI/NEW-8'	new wrap	4	64	0.3	0.2	382	1,988
IN	Interior	2556	Wayne Hills-High School	Classroom 203	2	2L4' T8 28w/ELEE	wrap	2	48	0.1	1L4' T8 28w/ELEE HI/NEW	new wrap	2	33	0.1	0.0	60	1,988
IN	Interior	2557	Wayne Hills-High School	Classroom 205	2	4L4' T8 32w/EL-8'	wrap	2	112	0.2	2L4' T8 28w/ELEE HI/NEW-8'	new wrap	2	64	0.1	0.1	191	1,988
IN	Interior	2558	Wayne Hills-High School	Classroom 205	2	2L4' T8 28w/ELEE	wrap	1	48	0.0	1L4' T8 28w/ELEE HI/NEW	new wrap	1	33	0.0	0.0	30	1,988
IN	Interior	2559	Wayne Hills-High School	Classroom 205	2	4L4' T8 32w/EL-8'	wrap	4	112	0.4	2L4' T8 28w/ELEE HI/NEW-8'	new wrap	4	64	0.3	0.2	382	1,988
IN	Interior	2560	Wayne Hills-High School	Classroom 205	2	2L4' T8 28w/ELEE	wrap	2	48	0.1	1L4' T8 28w/ELEE HI/NEW	new wrap	2	33	0.1	0.0	60	1,988
IN	Interior	2561	Wayne Hills-High School	Classroom 207	2	4L4' T8 32w/EL-8'	wrap	2	112	0.2	2L4' T8 28w/ELEE HI/NEW-8'	new wrap	2	64	0.1	0.1	191	1,988
IN	Interior	2562	Wayne Hills-High School	Classroom 207	2	2L4' T8 28w/ELEE	wrap	1	48	0.0	1L4' T8 28w/ELEE HI/NEW	new wrap	1	33	0.0	0.0	30	1,988
IN	Interior	2563	Wayne Hills-High School	Classroom 207	2	4L4' T8 32w/EL-8'	wrap	4	112	0.4	2L4' T8 28w/ELEE HI/NEW-8'	new wrap	4	64	0.3	0.2	382	1,988
IN	Interior	2564	Wayne Hills-High School	Classroom 207	2	2L4' T8 28w/ELEE	wrap	2	48	0.1	1L4' T8 28w/ELEE HI/NEW	new wrap	2	33	0.1	0.0	60	1,988
IN	Interior	2565	Wayne Hills-High School	Classroom 209	2	4L4' T8 32w/EL-8'	wrap	2	112	0.2	2L4' T8 28w/ELEE HI/NEW-8'	new wrap	2	64	0.1	0.1	191	1,988
IN	Interior	2566	Wayne Hills-High School	Classroom 209	2	2L4' T8 28w/ELEE	wrap	1	48	0.0	1L4' T8 28w/ELEE HI/NEW	new wrap	1	33	0.0	0.0	30	1,988
IN	Interior	2567	Wayne Hills-High School	Classroom 209	2	4L4' T8 32w/EL-8'	wrap	4	112	0.4	2L4' T8 28w/ELEE HI/NEW-8'	new wrap	4	64	0.3	0.2	382	1,988
IN	Interior	2568	Wayne Hills-High School	Classroom 209	2	2L4' T8 28w/ELEE	wrap	2	48	0.1	1L4' T8 28w/ELEE HI/NEW	new wrap	2	33	0.1	0.0	60	1,988
IN	Interior	2569	Wayne Hills-High School	Classroom 211	2	4L4' T8 32w/EL-8'	wrap	2	112	0.2	2L4' T8 28w/ELEE HI/NEW-8'	new wrap	2	64	0.1	0.1	191	1,988
IN	Interior	2570	Wayne Hills-High School	Classroom 211	2	2L4' T8 28w/ELEE	wrap	1	48	0.0	1L4' T8 28w/ELEE HI/NEW	new wrap	1	33	0.0	0.0	30	1,988
IN	Interior	2571	Wayne Hills-High School	Classroom 211	2	4L4' T8 32w/EL-8'	wrap	4	112	0.4	2L4' T8 28w/ELEE HI/NEW-8'	new wrap	4	64	0.3	0.2	382	1,988
IN	Interior	2572	Wayne Hills-High School	Classroom 211	2	2L4' T8 28w/ELEE	wrap	2	48	0.1	1L4' T8 28w/ELEE HI/NEW	new wrap	2	33	0.1	0.0	60	1,988
IN	Interior	2573	Wayne Hills-High School	Classroom 212	2	4L4' T8 32w/EL-8'	wrap	2	112	0.2	2L4' T8 28w/ELEE HI/NEW-8'	new wrap	2	64	0.1	0.1	191	1,988
IN	Interior	2574	Wayne Hills-High School	Classroom 212	2	2L4' T8 28w/ELEE	wrap	1	48	0.0	1L4' T8 28w/ELEE HI/NEW	new wrap	1	33	0.0	0.0	30	1,988
IN	Interior	2575	Wayne Hills-High School	Classroom 212	2	4L4' T8 32w/EL-8'	wrap	4	112	0.4	2L4' T8 28w/ELEE HI/NEW-8'	new wrap	4	64	0.3	0.2	382	1,988
IN	Interior	2576	Wayne Hills-High School	Classroom 212	2	2L4' T8 28w/ELEE	wrap	2	48	0.1	1L4' T8 28w/ELEE HI/NEW	new wrap	2	33	0.1	0.0	60	1,988
IN	Interior	2577	Wayne Hills-High School	Hall 201 To 227	2	3L2' T8 17w/EL	trof acr	34	47	1.6	3L2' T8 15w/ELEE LO	rlrb	34	39	1.3	0.3	693	2,548
IN	Interior	2578	Wayne Hills-High School	Office 216	2	3L4' T8 32w/EL	trof acr	4	88	0.4	3L4' T8 28w/ELEE LO	rlrb	4	63	0.3	0.1	284	2,840
IN	Interior	2579	Wayne Hills-High School	Stair West 2	s	2L4' T8 32w/EL	box acrylic	9	60	0.5	2L4' T8 28w/ELEE LO/NEW	new wrap wide	9	42	0.4	0.2	590	3,640
IN	Interior	2580	Wayne Hills-High School	Library	2	3L4' T8 32w/EL	trof acr	60	88	5.3	2L4' T8 28w/ELEE HI/RFL	rlrb RT8 kit	60	64	3.8	1.4	4,090	2,840
IN	Interior	2581	Wayne Hills-High School	Library	2	1L4' T8 32w/EL	cove	36	30	1.1	1L4' T8 28w/ELEE LO	rlrb	36	22	0.8	0.3	818	2,840
IN	Interior	2582	Wayne Hills-High School	Library	2	4L4' T8 32w/EL-8'	wrap	6	112	0.7	2L4' T8 28w/ELEE HI/NEW-8'	new wrap	6	64	0.4	0.3	818	2,840
IN	Interior	2583	Wayne Hills-High School	Library	2	3L4' T8 32w/EL	trof acr	20	88	1.8	2L4' T8 28w/ELEE HI/RFL	rlrb RT8 kit	20	64	1.3	0.5	1,363	2,840
IN	Interior	2584	Wayne Hills-High School	Office Mihalasky	2	3L4' T8 32w/EL	trof acr	4	88	0.4	3L4' T8 28w/ELEE LO	rlrb	4	63	0.3	0.1	284	2,840
IN	Interior	2585	Wayne Hills-High School	Storage Mihalasky	2	60W INCANDESCENT	dome	1	60	0.1	23W COMPACT SI/29712/CF23	screw in	1	23	0.0	0.0	19	500
IN	Interior	2586	Wayne Hills-High School	Office Open Break Room	2	3L4' T8 32w/EL	trof acr	10	88	0.9	3L4' T8 28w/ELEE LO	rlrb	10	63	0.6	0.3	860	3,440
IN	Interior	2587	Wayne Hills-High School	Storage Serv Er	2	3L4' T8 32w/EL	trof acr	10	88	0.9	3L4' T8 28w/ELEE LO	rlrb	10	63	0.6	0.3	125	500
IN	Interior	2588	Wayne Hills-High School	Lounge Staff	2	4L4' T8 32w/EL-8'	wrap	12	112	1.3	2L4' T8 28w/ELEE HI/NEW-8'	new wrap	12	64	0.8	0.6	1,452	2,520
IN	Interior	2589	Wayne Hills-High School	Lounge Staff	2	2L4' T8 32w/EL	wrap	6	60	0.4	1L4' T8 28w/ELEE HI/NEW	new wrap	6	33	0.2	0.2	408	2,520
IN	Interior	2590	Wayne Hills-High School	Office 214	2	4L4' T8 32w/EL-8'	wrap	2	112	0.2	2L4' T8 28w/ELEE HI/NEW-8'	new wrap	2	64	0.1	0.1	273	2,840
IN	Interior	2591	Wayne Hills-High School	Office 214	2	2L4' T8 28w/ELEE	wrap	2	48	0.1	1L4' T8 28w/ELEE HI/NEW	new wrap	2	33	0.1	0.0	85	2,840
IN	Interior	2592	Wayne Hills-High School	Classroom 213	2	4L4' T8 32w/EL-8'	wrap	2	112	0.2	2L4' T8 28w/ELEE HI/NEW-8'	new wrap	2	64	0.1	0.1	191	1,988

In or Out	ECM	Line	Building Name	Location	Fl	Pre Fixture Description	Pre Fixture Style	Pre Qty	Pre Watts	Pre kW	Post Fixture Description	Post Fixture Style	Post Qty	Post Watts	Post kW	kW Saved	kWH Saved	Annual Hours
IN	Interior	2593	Wayne Hills-High School	Classroom 213	2	2L4' T8 28w/ELEE	wrap	1	48	0.0	1L4' T8 28w/ELEE HI/NEW	new wrap	1	33	0.0	0.0	30	1,988
IN	Interior	2594	Wayne Hills-High School	Classroom 213	2	4L4' T8 32w/EL-8'	wrap	4	112	0.4	2L4' T8 28w/ELEE HI/NEW-8'	new wrap	4	64	0.3	0.2	382	1,988
IN	Interior	2595	Wayne Hills-High School	Classroom 213	2	2L4' T8 28w/ELEE	wrap	2	48	0.1	1L4' T8 28w/ELEE HI/NEW	new wrap	2	33	0.1	0.0	60	1,988
IN	Interior	2596	Wayne Hills-High School	Classroom 215	2	4L4' T8 32w/EL-8'	wrap	3	112	0.3	2L4' T8 28w/ELEE HI/NEW-8'	new wrap	3	64	0.2	0.1	286	1,988
IN	Interior	2597	Wayne Hills-High School	Classroom 215	2	4L4' T8 32w/EL-8'	wrap	6	112	0.7	2L4' T8 28w/ELEE HI/NEW-8'	new wrap	6	64	0.4	0.3	573	1,988
IN	Interior	2598	Wayne Hills-High School	Classroom 217	2	4L4' T8 32w/EL-8'	wrap	2	112	0.2	2L4' T8 28w/ELEE HI/NEW-8'	new wrap	2	64	0.1	0.1	191	1,988
IN	Interior	2599	Wayne Hills-High School	Classroom 217	2	2L4' T8 28w/ELEE	wrap	1	48	0.0	1L4' T8 28w/ELEE HI/NEW	new wrap	1	33	0.0	0.0	30	1,988
IN	Interior	2600	Wayne Hills-High School	Classroom 217	2	4L4' T8 32w/EL-8'	wrap	4	112	0.4	2L4' T8 28w/ELEE HI/NEW-8'	new wrap	4	64	0.3	0.2	382	1,988
IN	Interior	2601	Wayne Hills-High School	Classroom 217	2	2L4' T8 28w/ELEE	wrap	2	48	0.1	1L4' T8 28w/ELEE HI/NEW	new wrap	2	33	0.1	0.0	60	1,988
IN	Interior	2602	Wayne Hills-High School	Classroom 221	2	4L4' T8 32w/EL-8'	wrap	2	112	0.2	2L4' T8 28w/ELEE HI/NEW-8'	new wrap	2	64	0.1	0.1	191	1,988
IN	Interior	2603	Wayne Hills-High School	Classroom 221	2	2L4' T8 28w/ELEE	wrap	1	48	0.0	1L4' T8 28w/ELEE HI/NEW	new wrap	1	33	0.0	0.0	30	1,988
IN	Interior	2604	Wayne Hills-High School	Classroom 221	2	4L4' T8 32w/EL-8'	wrap	4	112	0.4	2L4' T8 28w/ELEE HI/NEW-8'	new wrap	4	64	0.3	0.2	382	1,988
IN	Interior	2605	Wayne Hills-High School	Classroom 221	2	2L4' T8 28w/ELEE	wrap	2	48	0.1	1L4' T8 28w/ELEE HI/NEW	new wrap	2	33	0.1	0.0	60	1,988
IN	Interior	2606	Wayne Hills-High School	Classroom 223	2	4L4' T8 32w/EL-8'	wrap	2	112	0.2	2L4' T8 28w/ELEE HI/NEW-8'	new wrap	2	64	0.1	0.1	191	1,988
IN	Interior	2607	Wayne Hills-High School	Classroom 223	2	2L4' T8 28w/ELEE	wrap	1	48	0.0	1L4' T8 28w/ELEE HI/NEW	new wrap	1	33	0.0	0.0	30	1,988
IN	Interior	2608	Wayne Hills-High School	Classroom 223	2	4L4' T8 32w/EL-8'	wrap	4	112	0.4	2L4' T8 28w/ELEE HI/NEW-8'	new wrap	4	64	0.3	0.2	382	1,988
IN	Interior	2609	Wayne Hills-High School	Classroom 223	2	2L4' T8 28w/ELEE	wrap	2	48	0.1	1L4' T8 28w/ELEE HI/NEW	new wrap	2	33	0.1	0.0	60	1,988
IN	Interior	2610	Wayne Hills-High School	Classroom 225	2	4L4' T8 32w/EL-8'	wrap	2	112	0.2	2L4' T8 28w/ELEE HI/NEW-8'	new wrap	2	64	0.1	0.1	191	1,988
IN	Interior	2611	Wayne Hills-High School	Classroom 225	2	2L4' T8 28w/ELEE	wrap	1	48	0.0	1L4' T8 28w/ELEE HI/NEW	new wrap	1	33	0.0	0.0	30	1,988
IN	Interior	2612	Wayne Hills-High School	Classroom 225	2	4L4' T8 32w/EL-8'	wrap	4	112	0.4	2L4' T8 28w/ELEE HI/NEW-8'	new wrap	4	64	0.3	0.2	382	1,988
IN	Interior	2613	Wayne Hills-High School	Classroom 225	2	2L4' T8 28w/ELEE	wrap	2	48	0.1	1L4' T8 28w/ELEE HI/NEW	new wrap	2	33	0.1	0.0	60	1,988
IN	Interior	2614	Wayne Hills-High School	Classroom 227	2	4L4' T8 32w/EL-8'	wrap	2	112	0.2	2L4' T8 28w/ELEE HI/NEW-8'	new wrap	2	64	0.1	0.1	191	1,988
IN	Interior	2615	Wayne Hills-High School	Classroom 227	2	2L4' T8 28w/ELEE	wrap	1	48	0.0	1L4' T8 28w/ELEE HI/NEW	new wrap	1	33	0.0	0.0	30	1,988
IN	Interior	2616	Wayne Hills-High School	Classroom 227	2	4L4' T8 32w/EL-8'	wrap	4	112	0.4	2L4' T8 28w/ELEE HI/NEW-8'	new wrap	4	64	0.3	0.2	382	1,988
IN	Interior	2617	Wayne Hills-High School	Classroom 227	2	2L4' T8 28w/ELEE	wrap	2	48	0.1	1L4' T8 28w/ELEE HI/NEW	new wrap	2	33	0.1	0.0	60	1,988
IN	Interior	2618	Wayne Hills-High School	Bath 226Bt Boys	2	2L4' T8 28w/ELEE	wrap	2	48	0.1	1L4' T8 28w/ELEE HI/NEW	new wrap	2	33	0.1	0.0	109	3,640
IN	Interior	2619	Wayne Hills-High School	Bath 226Bt Boys	2	2x13W COMPACT HARDV	drum	1	30	0.0	NO RETRO	no change needed		30	0.0			3,640
IN	Interior	2620	Wayne Hills-High School	Bath 226Gt Girls	2	2L4' T8 28w/ELEE	wrap	2	48	0.1	1L4' T8 28w/ELEE HI/NEW	new wrap	2	33	0.1	0.0	109	3,640
IN	Interior	2621	Wayne Hills-High School	Bath 226Gt Girls	2	2x13W COMPACT HARDV	drum	1	30	0.0	NO RETRO	no change needed		30	0.0			3,640
IN	Interior	2622	Wayne Hills-High School	Office 224	2	4L4' T8 32w/EL-8'	wrap	3	112	0.3	2L4' T8 28w/ELEE HI/NEW-8'	new wrap	3	64	0.2	0.1	409	2,840
IN	Interior	2623	Wayne Hills-High School	Office 224	2	2L4' T8 28w/ELEE	wrap	2	48	0.1	1L4' T8 28w/ELEE HI/NEW	new wrap	2	33	0.1	0.0	85	2,840
IN	Interior	2624	Wayne Hills-High School	Office 224	2	3L2' T8 17w/EL	trof acr	4	47	0.2	3L2' T8 15w/ELEE LO	rlrb	4	39	0.2	0.0	91	2,840
IN	Interior	2625	Wayne Hills-High School	Closet 224 Sc	2	2L4' T8 28w/ELEE	wrap	2	48	0.1	1L4' T8 28w/ELEE HI/NEW	new wrap	2	33	0.1	0.0	15	500
IN	Interior	2626	Wayne Hills-High School	Storage Staff	2	2L4' T8 28w/ELEE	wrap	1	48	0.0	1L4' T8 28w/ELEE HI/NEW	new wrap	1	33	0.0	0.0	8	500
IN	Interior	2627	Wayne Hills-High School	Bath 222 Wt Women	2	2L2' F40 BIAX/EL	trof acr	1	72	0.1	2L2' F40BIAX/EL28W	rlrb	1	63	0.1	0.0	33	3,640
IN	Interior	2628	Wayne Hills-High School	Bath 222 Wt Women	2	2L4' T8 28w/ELEE	trof acr	2	48	0.1	2L4' T8 28w/ELEE LO	rlrb	2	42	0.1	0.0	44	3,640
IN	Interior	2629	Wayne Hills-High School	Bath 222 Wt Women	2	2L4' T12 EE/EEMAG	old vanity	1	70	0.1	2L4' T8 28w/ELEE LO/NEW	new vanity	1	42	0.0	0.0	102	3,640
IN	Interior	2630	Wayne Hills-High School	Bath 222 Mt Men	2	2L4' T8 U 1.5"/EL	trof acr	1	58	0.1	NO RETRO	no change		58	0.1			3,640
IN	Interior	2631	Wayne Hills-High School	Bath 222 Mt Men	2	2L4' T8 28w/ELEE	trof acr	2	48	0.1	2L4' T8 28w/ELEE LO	rlrb	2	42	0.1	0.0	44	3,640
IN	Interior	2632	Wayne Hills-High School	Bath 222 Mt Men	2	2L4' T12 EE/EEMAG	old vanity	1	70	0.1	2L4' T8 28w/ELEE LO/NEW	new vanity	1	42	0.0	0.0	102	3,640
IN	Interior	2633	Wayne Hills-High School	Closet Clean	2	23W COMPACT HARDWI	keyless	2	24	0.0	NO RETRO	no change needed		24	0.0			500
IN	Interior	2634	Wayne Hills-High School	Storage 219 Sc	2	4L4' T12 EE/EEMAG-8'	old wrap	2	140	0.3	2L4' T8 28w/ELEE HI/NEW-8'	new wrap	2	64	0.1	0.2	76	500
IN	Interior	2635	Wayne Hills-High School	Storage 219 Sc	2	2L4' T12 EE/EEMAG	old wrap	2	70	0.1	1L4' T8 28w/ELEE HI/NEW	new wrap	2	33	0.1	0.1	37	500
IN	Interior	2636	Wayne Hills-High School	Hall 217 To 240	2	3L2' T8 17w/EL	trof acr	10	47	0.5	3L2' T8 15w/ELEE LO	rlrb	10	39	0.4	0.1	291	3,640
IN	Interior	2637	Wayne Hills-High School	Office 219 Ao	2	4L4' T8 32w/EL-8'	wrap	2	112	0.2	2L4' T8 28w/ELEE HI/NEW-8'	new wrap	2	64	0.1	0.1	273	2,840
IN	Interior	2638	Wayne Hills-High School	Storage 219 Ao	2	4L4' T8 32w/EL-8'	wrap	1	112	0.1	2L4' T8 28w/ELEE HI/NEW-8'	new wrap	1	64	0.1	0.0	24	500
IN	Interior	2639	Wayne Hills-High School	Office 219 Av Projection Room	2	3L4' T8 32w/EL	trof acr	2	88	0.2	3L4' T8 28w/ELEE LO	rlrb	2	63	0.1	0.1	142	2,840
IN	Interior	2640	Wayne Hills-High School	Office 219 Av Projection Room	2	60W INCANDESCENT	can rec 6"	8	60	0.5	12 WATT LED/KIT	Cree can retro kit	8	12	0.1	0.4	1,091	2,840

In or Out	ECM	Line	Building Name	Location	Fl	Pre Fixture Description	Pre Fixture Style	Pre Qty	Pre Watts	Pre kW	Post Fixture Description	Post Fixture Style	Post Qty	Post Watts	Post kW	kW Saved	kWH Saved	Annual Hours
IN	Interior	2641	Wayne Hills-High School	Conference 219 Cr	2	4L4' T8 32w/EL-8'	wrap	2	112	0.2	2L4' T8 28w/ELEE HI/NEW-8'	new wrap	2	64	0.1	0.1	273	2,840
IN	Interior	2642	Wayne Hills-High School	Office 219 Bo	2	4L4' T8 32w/EL-8'	wrap	2	112	0.2	2L4' T8 28w/ELEE HI/NEW-8'	new wrap	2	64	0.1	0.1	273	2,840
IN	Interior	2643	Wayne Hills-High School	Office 219 Co	2	3L4' T8 32w/EL	trof acr	2	88	0.2	3L4' T8 28w/ELEE LO	rlrb	2	63	0.1	0.1	142	2,840
IN	Interior	2644	Wayne Hills-High School	Closet Clean	2	3L4' T8 32w/EL	trof acr	2	88	0.2	3L4' T8 28w/ELEE LO	rlrb	2	63	0.1	0.1	25	500
IN	Interior	2645	Wayne Hills-High School	Storage 234	2	4L4' T8 32w/EL-8'	wrap	7	112	0.8	2L4' T8 28w/ELEE HI/NEW-8'	new wrap	7	64	0.4	0.3	820	2,440
IN	Interior	2646	Wayne Hills-High School	Storage 234	2	2L4' T8 32w/EL	wrap	5	60	0.3	1L4' T8 28w/ELEE HI/NEW	new wrap	5	33	0.2	0.1	329	2,440
IN	Interior	2647	Wayne Hills-High School	Storage 234	2	60W INCANDESCENT	keyless	2	60	0.1	2L2' T8 15w/ELEE LO/NEW	new wrap	2	24	0.0	0.1	36	500
IN	Interior	2648	Wayne Hills-High School	Storage 234	2	60W INCANDESCENT	keyless	1	60	0.1	2L2' T8 15w/ELEE LO/NEW	new wrap	1	24	0.0	0.0	18	500
IN	Interior	2649	Wayne Hills-High School	Stair East 5	s	2L4' T8 32w/EL	box acrylic	4	60	0.2	2L4' T8 28w/ELEE LO/NEW	new wrap wide	4	42	0.2	0.1	262	3,640
IN	Interior	2650	Wayne Hills-High School	Office 232	2	4L4' T8 32w/EL-8'	wrap	6	112	0.7	2L4' T8 28w/ELEE HI/NEW-8'	new wrap	6	64	0.4	0.3	573	1,988
IN	Interior	2651	Wayne Hills-High School	Classroom 233	2	4L4' T8 32w/EL-8'	wrap	4	112	0.4	2L4' T8 28w/ELEE HI/NEW-8'	new wrap	4	64	0.3	0.2	382	1,988
IN	Interior	2652	Wayne Hills-High School	Classroom 233	2	2L4' T8 28w/ELEE	wrap	1	48	0.0	1L4' T8 28w/ELEE HI/NEW	new wrap	1	33	0.0	0.0	30	1,988
IN	Interior	2653	Wayne Hills-High School	Classroom 233	2	4L4' T8 32w/EL-8'	wrap	7	112	0.8	2L4' T8 28w/ELEE HI/NEW-8'	new wrap	7	64	0.4	0.3	668	1,988
IN	Interior	2654	Wayne Hills-High School	Office 233	2	4L4' T8 32w/EL-8'	wrap	3	112	0.3	2L4' T8 28w/ELEE HI/NEW-8'	new wrap	3	64	0.2	0.1	409	2,840
IN	Interior	2655	Wayne Hills-High School	Classroom 231	2	4L4' T8 32w/EL-8'	wrap	4	112	0.4	2L4' T8 28w/ELEE HI/NEW-8'	new wrap	4	64	0.3	0.2	382	1,988
IN	Interior	2656	Wayne Hills-High School	Classroom 231	2	2L4' T8 28w/ELEE	wrap	1	48	0.0	1L4' T8 28w/ELEE HI/NEW	new wrap	1	33	0.0	0.0	30	1,988
IN	Interior	2657	Wayne Hills-High School	Classroom 231	2	4L4' T8 32w/EL-8'	wrap	7	112	0.8	2L4' T8 28w/ELEE HI/NEW-8'	new wrap	7	64	0.4	0.3	668	1,988
IN	Interior	2658	Wayne Hills-High School	Classroom 229	2	4L4' T8 32w/EL-8'	wrap	4	112	0.4	2L4' T8 28w/ELEE HI/NEW-8'	new wrap	4	64	0.3	0.2	382	1,988
IN	Interior	2659	Wayne Hills-High School	Classroom 229	2	2L4' T8 28w/ELEE	wrap	1	48	0.0	1L4' T8 28w/ELEE HI/NEW	new wrap	1	33	0.0	0.0	30	1,988
IN	Interior	2660	Wayne Hills-High School	Classroom 229	2	4L4' T8 32w/EL-8'	wrap	6	112	0.7	2L4' T8 28w/ELEE HI/NEW-8'	new wrap	6	64	0.4	0.3	573	1,988
IN	Interior	2661	Wayne Hills-High School	Classroom 229	2	2L4' T8 28w/ELEE	wrap	2	48	0.1	1L4' T8 28w/ELEE HI/NEW	new wrap	2	33	0.1	0.0	60	1,988
IN	Interior	2662	Wayne Hills-High School	Office 229	2	4L4' T8 32w/EL-8'	wrap	3	112	0.3	2L4' T8 28w/ELEE HI/NEW-8'	new wrap	3	64	0.2	0.1	409	2,840
IN	Interior	2663	Wayne Hills-High School	Classroom 228	2	4L4' T8 32w/EL-8'	wrap	5	112	0.6	2L4' T8 28w/ELEE HI/NEW-8'	new wrap	5	64	0.3	0.2	477	1,988
IN	Interior	2664	Wayne Hills-High School	Classroom 228	2	4L4' T8 32w/EL-8'	wrap	7	112	0.8	2L4' T8 28w/ELEE HI/NEW-8'	new wrap	7	64	0.4	0.3	668	1,988
IN	Interior	2665	Wayne Hills-High School	Classroom 228	2	2L4' T8 28w/ELEE	wrap	2	48	0.1	1L4' T8 28w/ELEE HI/NEW	new wrap	2	33	0.1	0.0	60	1,988
IN	Interior	2666	Wayne Hills-High School	Hall 228	2	3L2' T8 17w/EL	trof acr	13	47	0.6	3L2' T8 15w/ELEE LO	rlrb	13	39	0.5	0.1	265	2,548
IN	Interior	2667	Wayne Hills-High School	Hall Display Case	2	2L4' T12 EE/EEMAG	strip	1	70	0.1	1L4' T8 28w/ELEE/STRIP KIT	rlrb strip kit	1	24	0.0	0.0	167	3,640
IN	Interior	2668	Wayne Hills-High School	Stair West 1	s	2L4' T8 32w/EL	box acrylic	4	60	0.2	2L4' T8 28w/ELEE LO/NEW	new wrap wide	4	42	0.2	0.1	262	3,640
IN	Interior	2669	Wayne Hills-High School	Classroom 114	1	4L4' T8 32w/EL-8'	wrap	7	112	0.8	2L4' T8 28w/ELEE HI/NEW-8'	new wrap	7	64	0.4	0.3	954	2,840
IN	Interior	2670	Wayne Hills-High School	Classroom 114	1	4L4' T8 32w/EL-8'	wrap	8	112	0.9	2L4' T8 28w/ELEE HI/NEW-8'	new wrap	8	64	0.5	0.4	1,091	2,840
IN	Interior	2671	Wayne Hills-High School	Storage 114	1	2L4' T8 32w/EL	wrap	3	60	0.2	1L4' T8 28w/ELEE HI/NEW	new wrap	3	33	0.1	0.1	41	500
IN	Interior	2672	Wayne Hills-High School	Classroom Studio	1	2L4' T8 32w/EL	wrap	3	60	0.2	1L4' T8 28w/ELEE HI/NEW	new wrap	3	33	0.1	0.1	230	2,840
IN	Interior	2673	Wayne Hills-High School	Classroom Studio	1	3L4' T8 32w/EL	trof acr	2	88	0.2	2L4' T8 28w/ELEE/RFL	rlrb RT8 kit	2	48	0.1	0.1	227	2,840
IN	Interior	2674	Wayne Hills-High School	Office 112	1	4L4' T8 32w/EL-8'	wrap	2	112	0.2	2L4' T8 28w/ELEE HI/NEW-8'	new wrap	2	64	0.1	0.1	273	2,840
IN	Interior	2675	Wayne Hills-High School	Classroom 115	1	4L4' T8 32w/EL-8'	wrap	9	112	1.0	2L4' T8 28w/ELEE HI/NEW-8'	new wrap	9	64	0.6	0.4	1,227	2,840
IN	Interior	2676	Wayne Hills-High School	Classroom 115	1	2L4' T8 28w/ELEE	wrap	1	48	0.0	1L4' T8 28w/ELEE HI/NEW	new wrap	1	33	0.0	0.0	43	2,840
IN	Interior	2677	Wayne Hills-High School	Closet 115	1	2L4' T8 28w/ELEE	wrap	2	48	0.1	1L4' T8 28w/ELEE HI/NEW	new wrap	2	33	0.1	0.0	15	500
IN	Interior	2678	Wayne Hills-High School	Storage Camera	1	2L4' T8 28w/ELEE	wrap	2	48	0.1	1L4' T8 28w/ELEE HI/NEW	new wrap	2	33	0.1	0.0	15	500
IN	Interior	2679	Wayne Hills-High School	Classroom Workroom	1	4L4' T8 32w/EL-8'	wrap	1	112	0.1	2L4' T8 28w/ELEE HI/NEW-8'	new wrap	1	64	0.1	0.0	136	2,840
IN	Interior	2680	Wayne Hills-High School	Classroom Workroom	1	3L4' T8 32w/EL	trof acr	1	88	0.1	2L4' T8 28w/ELEE/RFL	rlrb RT8 kit	1	48	0.0	0.0	114	2,840
IN	Interior	2681	Wayne Hills-High School	Classroom 116	1	3L4' T8 32w/EL	trof acrylic dbl swi	18	88	1.6	2L4' T8 28w/ELEE/RFL	rlrb RT8 kit	18	48	0.9	0.7	1,431	1,988
IN	Interior	2682	Wayne Hills-High School	Classroom 116	1	3L4' T8 32w/EL	trof acrylic dbl swi	5	88	0.4	2L4' T8 28w/ELEE/RFL	rlrb RT8 kit	5	48	0.2	0.2	398	1,988
IN	Interior	2683	Wayne Hills-High School	Storage 116	1	2L4' T8 28w/ELEE	wrap	1	48	0.0	1L4' T8 28w/ELEE HI/NEW	new wrap	1	33	0.0	0.0	8	500
IN	Interior	2684	Wayne Hills-High School	Hall Stair West 1 To Stair South	1	3L2' T8 17w/EL	trof acr	12	47	0.6	3L2' T8 15w/ELEE LO	rlrb	12	39	0.5	0.1	349	3,640
IN	Interior	2685	Wayne Hills-High School	Classroom 117 Auto Shop	1	4L4' T8 32w/EL-8'	wrap	18	112	2.0	2L4' T8 28w/ELEE HI/NEW-8'	new wrap	18	64	1.2	0.9	2,454	2,840
IN	Interior	2686	Wayne Hills-High School	Classroom 117 Auto Shop	1	2L4' T8 28w/ELEE	wrap	2	48	0.1	1L4' T8 28w/ELEE HI/NEW	new wrap	2	33	0.1	0.0	85	2,840
IN	Interior	2687	Wayne Hills-High School	Storage 117 Auto Shop	1	2L4' T8 28w/ELEE	wrap	2	48	0.1	1L4' T8 28w/ELEE HI/NEW	new wrap	2	33	0.1	0.0	15	500
IN	Interior	2688	Wayne Hills-High School	Storage Parts	1	4L4' T8 32w/EL-8'	wrap	2	112	0.2	2L4' T8 28w/ELEE HI/NEW-8'	new wrap	2	64	0.1	0.1	234	2,440

In or Out	ECM	Line	Building Name	Location	Fl	Pre Fixture Description	Pre Fixture Style	Pre Qty	Pre Watts	Pre kW	Post Fixture Description	Post Fixture Style	Post Qty	Post Watts	Post kW	kW Saved	kWH Saved	Annual Hours
IN	Interior	2689	Wayne Hills-High School	Storage Band	1	60W INCANDESCENT	dome	4	60	0.2	2L4' T8 28w/ELEE LO/NEW	new wrap	4	42	0.2	0.1	36	500
IN	Interior	2690	Wayne Hills-High School	Classroom 118	1	4L4' T8 32w/EL-8'	wrap	3	112	0.3	2L4' T8 28w/ELEE HI/NEW-8'	new wrap	3	64	0.2	0.1	409	2,840
IN	Interior	2691	Wayne Hills-High School	Classroom 118	1	2L4' T8 28w/ELEE	wrap	1	48	0.0	1L4' T8 28w/ELEE HI/NEW	new wrap	1	33	0.0	0.0	43	2,840
IN	Interior	2692	Wayne Hills-High School	Classroom 118	1	4L4' T8 32w/EL-8'	wrap	9	112	1.0	2L4' T8 28w/ELEE HI/NEW-8'	new wrap	9	64	0.6	0.4	1,227	2,840
IN	Interior	2693	Wayne Hills-High School	Classroom 118	1	2L4' T8 32w/EL	wrap	3	60	0.2	1L4' T8 28w/ELEE HI/NEW	new wrap	3	33	0.1	0.1	230	2,840
IN	Interior	2694	Wayne Hills-High School	Office 118	1	4L4' T12 EE/EEMAG	trof opaque	1	140	0.1	4L4' T8 28w/ELEE LO	rlrb	1	83	0.1	0.1	162	2,840
IN	Interior	2695	Wayne Hills-High School	Hall Practice Rooms	1	60W INCANDESCENT	square recessed	3	60	0.2	11W COMPACT SI/29708/CF11	screw in	3	11	0.0	0.1	535	3,640
IN	Interior	2696	Wayne Hills-High School	Office Practice 1	1	2L4' T8 28w/ELEE	wrap	1	48	0.0	1L4' T8 28w/ELEE HI/NEW	new wrap	1	33	0.0	0.0	43	2,840
IN	Interior	2697	Wayne Hills-High School	Office Practice 2	1	2L4' T8 28w/ELEE	wrap	1	48	0.0	1L4' T8 28w/ELEE HI/NEW	new wrap	1	33	0.0	0.0	43	2,840
IN	Interior	2698	Wayne Hills-High School	Office Practice 3	1	2L4' T8 28w/ELEE	wrap	1	48	0.0	1L4' T8 28w/ELEE HI/NEW	new wrap	1	33	0.0	0.0	43	2,840
IN	Interior	2699	Wayne Hills-High School	Office 110 Ao	1	3L4' T8 32w/EL	trof acr	2	88	0.2	3L4' T8 28w/ELEE LO	rlrb	2	63	0.1	0.1	142	2,840
IN	Interior	2700	Wayne Hills-High School	Classroom 119	1	4L4' T8 32w/EL-8'	wrap	12	112	1.3	2L4' T8 28w/ELEE HI/NEW-8'	new wrap	12	64	0.8	0.6	1,636	2,840
IN	Interior	2701	Wayne Hills-High School	Classroom 119	1	4L4' T8 32w/EL-8'	wrap	4	112	0.4	2L4' T8 28w/ELEE HI/NEW-8'	new wrap	4	64	0.3	0.2	545	2,840
IN	Interior	2702	Wayne Hills-High School	Storage 119	1	4L4' T8 32w/EL	trof opaque	1	112	0.1	4L4' T8 28w/ELEE LO	rlrb	1	83	0.1	0.0	15	500
IN	Interior	2703	Wayne Hills-High School	Office Custodian	1	4L4' T8 32w/EL-8'	strip reflector	2	112	0.2	4L4' T8 28w/ELEE LO-8'	rlrb	2	83	0.2	0.1	165	2,840
IN	Interior	2704	Wayne Hills-High School	Office Custodian	1	2L4' T8 28w/ELEE	wrap	2	48	0.1	1L4' T8 28w/ELEE HI/NEW	new wrap	2	33	0.1	0.0	85	2,840
IN	Interior	2705	Wayne Hills-High School	Storage Custodian	1	2L4' T8 32w/EL	wrap	4	60	0.2	1L4' T8 28w/ELEE HI/NEW	new wrap	4	33	0.1	0.1	54	500
IN	Interior	2706	Wayne Hills-High School	Hall 119 To 117	1	3L2' T8 17w/EL	trof acr	9	47	0.4	3L2' T8 15w/ELEE LO	rlrb	9	39	0.4	0.1	262	3,640
IN	Interior	2707	Wayne Hills-High School	Mechanical Elevator	1	2L4' T8 28w/ELEE	wrap	2	48	0.1	1L4' T8 28w/ELEE HI/NEW	new wrap	2	33	0.1	0.0	15	500
IN	Interior	2708	Wayne Hills-High School	Hall 119 To 111	1	3L2' T8 17w/EL	trof acr	11	47	0.5	3L2' T8 15w/ELEE LO	rlrb	11	39	0.4	0.1	320	3,640
IN	Interior	2709	Wayne Hills-High School	Hall Display Case	1	1L4' T12 EE/EEMAG	strip	1	40	0.0	1L4' T8 28w/ELEE LO/STRIP KIT	rlrb strip kit	1	22	0.0	0.0	66	3,640
IN	Interior	2710	Wayne Hills-High School	Hall Display Case	1	1L2' T8 17w/EL	strip	1	17	0.0	1L2' T8 15w/ELEE/STRIP KIT	rlrb strip kit	1	17	0.0			3,640
IN	Interior	2711	Wayne Hills-High School	Hall Display Case	1	1L2' T12 STD/STD	strip	2	32	0.1	1L2' T8 15w/ELEE/STRIP KIT	rlrb strip kit	2	17	0.0	0.0	109	3,640
IN	Interior	2712	Wayne Hills-High School	Office Tickets	1	2x60W INCANDESCENTS	drum	1	120	0.1	2L2' T8 15w/ELEE LO/NEW	new wrap	1	24	0.0	0.1	273	2,840
IN	Interior	2713	Wayne Hills-High School	Classroom 119	1	4L4' T8 32w/EL-8'	wrap	9	112	1.0	2L4' T8 28w/ELEE HI/NEW-8'	new wrap	9	64	0.6	0.4	1,227	2,840
IN	Interior	2714	Wayne Hills-High School	Classroom 119	1	150W INCANDESCENT	track head	4	150	0.6	REMOVE FIXTURE	not needed	4			0.6	1,704	2,840
IN	Interior	2715	Wayne Hills-High School	Storage 119	1	2x60W INCANDESCENTS	old drum	1	120	0.1	2L2' T8 15w/ELEE LO/NEW	new wrap	1	24	0.0	0.1	48	500
IN	Interior	2716	Wayne Hills-High School	Storage Kiln	1	3L4' T8 32w/EL	wrap wide	5	88	0.4	2L4' T8 28w/ELEE HI/NEW	new wrap wide	5	64	0.3	0.1	60	500
IN	Interior	2717	Wayne Hills-High School	Office 109 Ao	1	3L4' T8 32w/EL	wrap wide	4	88	0.4	2L4' T8 28w/ELEE HI/NEW	new wrap wide	4	64	0.3	0.1	273	2,840
IN	Interior	2718	Wayne Hills-High School	Storage Files	1	150W INCANDESCENT	dome	4	150	0.6	2L2' T8 15w/ELEE LO/NEW	new wrap	4	24	0.1	0.5	252	500
IN	Interior	2719	Wayne Hills-High School	Classroom 111	1	4L4' T8 32w/EL-8'	wrap	3	112	0.3	2L4' T8 28w/ELEE HI/NEW-8'	new wrap	3	64	0.2	0.1	286	1,988
IN	Interior	2720	Wayne Hills-High School	Classroom 111	1	4L4' T8 32w/EL-8'	wrap	6	112	0.7	2L4' T8 28w/ELEE HI/NEW-8'	new wrap	6	64	0.4	0.3	573	1,988
IN	Interior	2721	Wayne Hills-High School	Classroom 111	1	2L4' T8 28w/ELEE	wrap	2	48	0.1	1L4' T8 28w/ELEE HI/NEW	new wrap	2	33	0.1	0.0	60	1,988
IN	Interior	2722	Wayne Hills-High School	Classroom 113	1	4L4' T8 32w/EL-8'	wrap	7	112	0.8	2L4' T8 28w/ELEE HI/NEW-8'	new wrap	7	64	0.4	0.3	954	2,840
IN	Interior	2723	Wayne Hills-High School	Classroom 113	1	4L4' T8 32w/EL-8'	wrap	14	112	1.6	2L4' T8 28w/ELEE HI/NEW-8'	new wrap	14	64	0.9	0.7	1,908	2,840
IN	Interior	2724	Wayne Hills-High School	Storage 113	1	2L4' T12 EE/EEMAG	explosion	2	70	0.1	2L4' T8 28w/ELEE LO	rlrb	2	42	0.1	0.1	28	500
IN	Interior	2725	Wayne Hills-High School	Storage Wood	1	2L4' T8 28w/ELEE	wrap	2	48	0.1	1L4' T8 28w/ELEE HI/NEW	new wrap	2	33	0.1	0.0	15	500
IN	Interior	2726	Wayne Hills-High School	Storage Tools	1	2L4' T8 28w/ELEE	wrap	1	48	0.0	1L4' T8 28w/ELEE HI/NEW	new wrap	1	33	0.0	0.0	8	500
IN	Interior	2727	Wayne Hills-High School	Bath Women	1	2L4' T8 U/EL	trof acr	2	60	0.1	2L2' T8 15w/ELEE HI/RFL	rlrb rfl	2	33	0.1	0.1	197	3,640
IN	Interior	2728	Wayne Hills-High School	Bath Women	1	2L4' T8 32w/EL	vanity	1	60	0.1	2L4' T8 28w/ELEE LO/NEW	new vanity	1	42	0.0	0.0	66	3,640
IN	Interior	2729	Wayne Hills-High School	Bath Men	1	3L2' T8 17w/EL	trof acr	6	47	0.3	3L2' T8 15w/ELEE LO	rlrb	6	39	0.2	0.0	175	3,640
IN	Interior	2730	Wayne Hills-High School	Bath Men	1	2L4' T8 32w/EL	vanity	1	60	0.1	2L4' T8 28w/ELEE LO/NEW	new vanity	1	42	0.0	0.0	66	3,640
IN	Interior	2731	Wayne Hills-High School	Classroom Dressing Room	1	3L4' T8 32w/EL	trof acr	4	88	0.4	2L4' T8 28w/ELEE/RFL	rlrb RT8 kit	4	48	0.2	0.2	454	2,840
IN	Interior	2732	Wayne Hills-High School	Bath Dressing Room	1	2x60W INCANDESCENTS	drum	1	120	0.1	2L2' T8 15w/ELEE LO/NEW	new wrap	1	24	0.0	0.1	349	3,640
IN	Interior	2733	Wayne Hills-High School	Stair 114 To 109	s	3L2' T8 17w/EL	trof acr	11	47	0.5	3L2' T8 15w/ELEE LO	rlrb	11	39	0.4	0.1	320	3,640
IN	Interior	2734	Wayne Hills-High School	Stair Display Case	s	2L4' T8 28w/ELEE	strip	1	48	0.0	1L4' T8 28w/ELEE/STRIP KIT	rlrb strip kit	1	24	0.0	0.0	87	3,640
IN	Interior	2735	Wayne Hills-High School	Hall To Aud Side Entry	1	2L4' T8 28w/ELEE	trof acr	2	48	0.1	2L4' T8 28w/ELEE LO	rlrb	2	42	0.1	0.0	44	3,640
IN	Interior	2736	Wayne Hills-High School	Storage Dressing Room	1	100W INCANDESCENT	dome	1	100	0.1	23W COMPACT SI/29712/CF23	screw in	1	23	0.0	0.1	188	2,440

In or Out	ECM	Line	Building Name	Location	Fl	Pre Fixture Description	Pre Fixture Style	Pre Qty	Pre Watts	Pre kW	Post Fixture Description	Post Fixture Style	Post Qty	Post Watts	Post kW	kW Saved	kWH Saved	Annual Hours
IN	Interior	2737	Wayne Hills-High School	Auditorium Seating Area	1	100W INCANDESCENT	can dim rec	16	100	1.6	21 WATT LED SI/LED21Par38/D	screw in led	16	21	0.3	1.3	4,095	3,240
IN	Interior	2738	Wayne Hills-High School	Auditorium Seating Area	1	150W INCANDESCENT	can dim rec	88	150	13.2	21 WATT LED SI/LED21Par38/D	screw in led	88	21	1.8	11.4	36,780	3,240
IN	Interior	2739	Wayne Hills-High School	Auditorium Seating Area	1	25W INCANDESCENT	aisle	4	25	0.1	3 WATT LED/KIT	aislelight retro kit	4	3	0.0	0.1	285	3,240
IN	Interior	2740	Wayne Hills-High School	Stage	1	150W INCANDESCENT	dome	14	150	2.1	2L4' T8 28w/ELEE/NEW	new wrap	14	48	0.7	1.4	4,170	2,920
IN	Interior	2741	Wayne Hills-High School	Storage Stage	1	150W INCANDESCENT	dome	3	150	0.5	2L2' T8 15w/ELEE LO/NEW	new wrap	3	24	0.1	0.4	922	2,440
IN	Interior	2742	Wayne Hills-High School	Hall On Left Of Stage	1	100W INCANDESCENT	can rec 9"	3	100	0.3	21 WATT LED SI/LED21Par38/D	screw in led	3	21	0.1	0.2	863	3,640
IN	Interior	2743	Wayne Hills-High School	Bath Men	1	2L2' F40 BIAX/EL	trof acr	1	72	0.1	2L2' F40BIAX/EL28W	rlrb	1	63	0.1	0.0	33	3,640
IN	Interior	2744	Wayne Hills-High School	Bath Men	1	2L4' T8 28w/ELEE	trof acr	1	48	0.0	2L4' T8 28w/ELEE LO	rlrb	1	42	0.0	0.0	22	3,640
IN	Interior	2745	Wayne Hills-High School	Bath Men	1	2L2' T8 17w/EL	vanity	1	33	0.0	2L2' T8 15w/ELEE LO/NEW	new vanity	1	24	0.0	0.0	33	3,640
IN	Interior	2746	Wayne Hills-High School	Bath Women	1	2L2' F40 BIAX/EL	trof acr	1	72	0.1	2L2' F40BIAX/EL28W	rlrb	1	63	0.1	0.0	33	3,640
IN	Interior	2747	Wayne Hills-High School	Bath Women	1	2L4' T8 28w/ELEE	trof acr	1	48	0.0	2L4' T8 28w/ELEE LO	rlrb	1	42	0.0	0.0	22	3,640
IN	Interior	2748	Wayne Hills-High School	Bath Women	1	2L2' T8 17w/EL	vanity	1	33	0.0	2L2' T8 15w/ELEE LO/NEW	new vanity	1	24	0.0	0.0	33	3,640
IN	Interior	2749	Wayne Hills-High School	Hall Receiving	1	3L2' T8 17w/EL	trof acr	4	47	0.2	3L2' T8 15w/ELEE LO	rlrb	4	39	0.2	0.0	116	3,640
IN	Interior	2750	Wayne Hills-High School	Storage 121 Sa	1	2L4' T8 28w/ELEE	strip reflector	1	48	0.0	2L4' T8 28w/ELEE LO	rlrb	1	42	0.0	0.0	3	500
IN	Interior	2751	Wayne Hills-High School	Storage 121 Sb	1	2x60W INCANDESCENTS	old drum	1	120	0.1	2L2' T8 15w/ELEE LO/NEW	new wrap	1	24	0.0	0.1	48	500
IN	Interior	2752	Wayne Hills-High School	Mechanical Boiler	1	4L4' T8 32w/EL-8'	strip reflector	5	112	0.6	4L4' T8 28w/ELEE LO-8'	rlrb	5	83	0.4	0.1	73	500
IN	Interior	2753	Wayne Hills-High School	Mechanical Boiler	1	2L4' T8 32w/EL	strip reflector	3	60	0.2	2L4' T8 28w/ELEE LO	rlrb	3	42	0.1	0.1	27	500
IN	Interior	2754	Wayne Hills-High School	Mechanical Boiler	1	4L4' T8 32w/EL-8'	old wrap	3	112	0.3	2L4' T8 28w/ELEE HI/NEW-8'	new wrap	3	64	0.2	0.1	72	500
IN	Interior	2755	Wayne Hills-High School	Mechanical Boiler	1	2L4' T8 32w/EL	old wrap	1	60	0.1	1L4' T8 28w/ELEE HI/NEW	new wrap	1	33	0.0	0.0	14	500
IN	Interior	2756	Wayne Hills-High School	Hall By Kitchen	1	3L2' T8 17w/EL	trof acr	5	47	0.2	3L2' T8 15w/ELEE LO	rlrb	5	39	0.2	0.0	102	2,548
IN	Interior	2757	Wayne Hills-High School	Kitchen 120 Prep Area	1	4L4' T8 32w/EL-8'	wrap	17	112	1.9	2L4' T8 28w/ELEE HI/NEW-8'	new wrap	17	64	1.1	0.8	2,317	2,840
IN	Interior	2758	Wayne Hills-High School	Kitchen 120 Prep Area	1	2L4' T8 28w/ELEE	wrap	2	48	0.1	2L4' T8 28w/ELEE LO/NEW	new wrap	2	42	0.1	0.0	34	2,840
IN	Interior	2759	Wayne Hills-High School	Kitchen Grease Hood	1	2L2' T12 STD/STD	trof acr 1' wide	7	56	0.4	2L2' T8 15w/ELEE LO	rlrb	7	27	0.2	0.2	577	2,840
IN	Interior	2760	Wayne Hills-High School	Storage Dry Goods	1	2L4' T8 32w/EL	wrap	4	60	0.2	1L4' T8 28w/ELEE HI/NEW	new wrap	4	33	0.1	0.1	54	500
IN	Interior	2761	Wayne Hills-High School	Storage Pans	1	2L4' T8 32w/EL	wrap	4	60	0.2	1L4' T8 28w/ELEE HI/NEW	new wrap	4	33	0.1	0.1	54	500
IN	Interior	2762	Wayne Hills-High School	Storage Can	1	2L4' T8 32w/EL	wrap	4	60	0.2	1L4' T8 28w/ELEE HI/NEW	new wrap	4	33	0.1	0.1	54	500
IN	Interior	2763	Wayne Hills-High School	Cafeteria Seating Area	1	6L4' T8 32w/EL	circle	36	180	6.5	6L4' T8 28w/ELEE LO	rlrb 4L & 2L	36	126	4.5	1.9	6,687	3,440
IN	Interior	2764	Wayne Hills-High School	Cafeteria Seating Area	1	100W INCANDESCENT	can rec 12"	10	100	1.0	21 WATT LED SI/LED21Par38/D	screw in led	10	21	0.2	0.8	2,718	3,440
IN	Interior	2765	Wayne Hills-High School	Cafeteria Seating Area	1	1L4' T8 32w/EL	cove	40	30	1.2	1L4' T8 28w/ELEE LO	rlrb	40	22	0.9	0.3	1,101	3,440
IN	Interior	2766	Wayne Hills-High School	Lounge Staff	1	8L4' T8 32w/EL	decorative	3	224	0.7	8L4' T8 28w/ELEE LO	rlrb	3	166	0.5	0.2	438	2,520
IN	Interior	2767	Wayne Hills-High School	Hall By Cafeteria	1	2L4' T8 32w/EL-8'	strip	20	60	1.2	2L4' T8 28w/ELEE LO/STRIP KI	rlrb strip kit	20	42	0.8	0.4	1,310	3,640
IN	Interior	2768	Wayne Hills-High School	Lobby Entry	1	3L2' T8 17w/EL	trof acr	8	47	0.4	3L2' T8 15w/ELEE LO	rlrb	8	39	0.3	0.1	233	3,640
IN	Interior	2769	Wayne Hills-High School	Lobby Entry	1	3L2' T8 17w/EL	trof acr	1	47	0.0	3L2' T8 15w/ELEE LO	rlrb	1	39	0.0	0.0	29	3,640
IN	Interior	2770	Wayne Hills-High School	Lobby Entry	1	2L2' F40 BIAX/EL	wallwash	6	72	0.4	2L2' F40BIAX/EL28W	rlrb	6	63	0.4	0.1	197	3,640
IN	Interior	2771	Wayne Hills-High School	Hall Commons To 165	1	3L2' T8 17w/EL	trof acr	10	47	0.5	3L2' T8 15w/ELEE LO	rlrb	10	39	0.4	0.1	204	2,548
IN	Interior	2772	Wayne Hills-High School	Hall Commons To 165	1	2L4' T8 32w/EL	trof acr	9	60	0.5	2L4' T8 28w/ELEE LO	rlrb	9	42	0.4	0.2	413	2,548
IN	Interior	2773	Wayne Hills-High School	Hall Commons To 165	1	4L4' T8 32w/EL	decorative	1	112	0.1	4L4' T8 28w/ELEE LO	rlrb	1	83	0.1	0.0	74	2,548
IN	Interior	2774	Wayne Hills-High School	Storage Paper	1	100W INCANDESCENT	dome	3	100	0.3	23W COMPACT SI/29712/CF23	screw in	3	23	0.1	0.2	116	500
IN	Interior	2775	Wayne Hills-High School	Storage Shelves	1	100W INCANDESCENT	dome	2	100	0.2	23W COMPACT SI/29712/CF23	screw in	2	23	0.0	0.2	77	500
IN	Interior	2776	Wayne Hills-High School	Closet Clean	1	2L4' T8 28w/ELEE	wrap	1	48	0.0	1L4' T8 28w/ELEE HI/NEW	new wrap	1	33	0.0	0.0	8	500
IN	Interior	2777	Wayne Hills-High School	Storage Tables	1	2x60W INCANDESCENTS	old drum	3	120	0.4	2L2' T8 15w/ELEE LO/NEW	new wrap	3	24	0.1	0.3	144	500
IN	Interior	2778	Wayne Hills-High School	Storage Generator Access Outsi	1	2L4' T8 28w/ELEE	wrap	2	48	0.1	1L4' T8 28w/ELEE HI/NEW	new wrap	2	33	0.1	0.0	15	500
IN	Interior	2779	Wayne Hills-High School	Classroom 164	1	3L4' T8 32w/EL	trof para dbl switc	12	88	1.1	2L4' T8 28w/ELEE/RFL	rlrb RT8 kit	12	48	0.6	0.5	954	1,988
IN	Interior	2780	Wayne Hills-High School	Classroom 165	1	3L4' T8 32w/EL	trof para dbl switc	12	88	1.1	2L4' T8 28w/ELEE/RFL	rlrb RT8 kit	12	48	0.6	0.5	954	1,988
IN	Interior	2781	Wayne Hills-High School	Classroom 162	1	3L4' T8 32w/EL	trof para dbl switc	9	88	0.8	2L4' T8 28w/ELEE/RFL	rlrb RT8 kit	9	48	0.4	0.4	716	1,988
IN	Interior	2782	Wayne Hills-High School	Classroom 163	1	3L4' T8 32w/EL	trof para dbl switc	9	88	0.8	2L4' T8 28w/ELEE/RFL	rlrb RT8 kit	9	48	0.4	0.4	716	1,988
IN	Interior	2783	Wayne Hills-High School	Classroom 161	1	9L4' T8 32w/EL-12'	indirect	6	264	1.6	9L4' T8 28w/ELEE LO-12'	rlrb	6	189	1.1	0.5	895	1,988
IN	Interior	2784	Wayne Hills-High School	Classroom 161	1	6L4' T8 32w/EL-8'	indirect	3	180	0.5	6L4' T8 28w/ELEE LO-8'	rlrb	3	126	0.4	0.2	322	1,988

In or Out	ECM	Line	Building Name	Location	Fl	Pre Fixture Description	Pre Fixture Style	Pre Qty	Pre Watts	Pre kW	Post Fixture Description	Post Fixture Style	Post Qty	Post Watts	Post kW	kW Saved	kWH Saved	Annual Hours
IN	Interior	2785	Wayne Hills-High School	Storage 161	1	2L4' T8 32w/EL	wrap	3	60	0.2	1L4' T8 28w/ELEE HI/NEW	new wrap	3	33	0.1	0.1	41	500
IN	Interior	2786	Wayne Hills-High School	Classroom 160	1	3L4' T8 32w/EL	trof para dbl switc	9	88	0.8	2L4' T8 28w/ELEE/RFL	rlrb RT8 kit	9	48	0.4	0.4	716	1,988
IN	Interior	2787	Wayne Hills-High School	Hall 165 To 128	1	2L4' T8 32w/EL	trof acr	24	60	1.4	2L4' T8 28w/ELEE LO	rlrb	24	42	1.0	0.4	1,572	3,640
IN	Interior	2788	Wayne Hills-High School	Hall 165 To 128	1	4L4' T8 32w/EL	decorative	3	112	0.3	4L4' T8 28w/ELEE LO	rlrb	3	83	0.2	0.1	317	3,640
IN	Interior	2789	Wayne Hills-High School	Storage 158 Sc	1	2L4' T8 32w/EL	wrap	3	60	0.2	1L4' T8 28w/ELEE HI/NEW	new wrap	3	33	0.1	0.1	41	500
IN	Interior	2790	Wayne Hills-High School	Bath 158 Gt	1	2L4' T8 32w/EL	trof acr	3	60	0.2	2L4' T8 28w/ELEE LO	rlrb	3	42	0.1	0.1	197	3,640
IN	Interior	2791	Wayne Hills-High School	Bath 158 Gt	1	2L2' F40 BIAX/EL	trof acr	1	72	0.1	2L2' F40BIAX/EL28W	rlrb	1	63	0.1	0.0	33	3,640
IN	Interior	2792	Wayne Hills-High School	Closet Clean	1	2L4' T8 28w/ELEE	wrap	1	48	0.0	1L4' T8 28w/ELEE HI/NEW	new wrap	1	33	0.0	0.0	8	500
IN	Interior	2793	Wayne Hills-High School	Bath 158 Bt	1	2L4' T8 32w/EL	trof acr	3	60	0.2	2L4' T8 28w/ELEE LO	rlrb	3	42	0.1	0.1	197	3,640
IN	Interior	2794	Wayne Hills-High School	Bath 158 Bt	1	2L2' F40 BIAX/EL	trof acr	1	72	0.1	2L2' F40BIAX/EL28W	rlrb	1	63	0.1	0.0	33	3,640
IN	Interior	2795	Wayne Hills-High School	Office Open 159	1	3L4' T8 32w/EL	trof para dbl switc	5	88	0.4	3L4' T8 28w/ELEE LO (1L&2L BA	rlrb dbl switched	5	64	0.3	0.1	289	2,408
IN	Interior	2796	Wayne Hills-High School	Bath 159	1	2L2' F40 BIAX/EL	trof acr	1	72	0.1	2L2' F40BIAX/EL28W	rlrb	1	63	0.1	0.0	23	2,548
IN	Interior	2797	Wayne Hills-High School	Office 159	1	4L4' T8 32w/EL	trof para dbl switc	3	112	0.3	4L4' T8 28w/ELEE LO (2Lx2 BAL	rlrb dbl switched	3	84	0.3	0.1	167	1,988
IN	Interior	2798	Wayne Hills-High School	Classroom 156	1	3L4' T8 32w/EL	trof para dbl switc	12	88	1.1	2L4' T8 28w/ELEE/RFL	rlrb RT8 kit	12	48	0.6	0.5	954	1,988
IN	Interior	2799	Wayne Hills-High School	Classroom 157	1	3L4' T8 32w/EL	trof para dbl switc	6	88	0.5	2L4' T8 28w/ELEE/RFL	rlrb RT8 kit	6	48	0.3	0.2	477	1,988
IN	Interior	2800	Wayne Hills-High School	Classroom 155	1	3L4' T8 32w/EL	trof para dbl switc	12	88	1.1	2L4' T8 28w/ELEE/RFL	rlrb RT8 kit	12	48	0.6	0.5	954	1,988
IN	Interior	2801	Wayne Hills-High School	Classroom 154	1	3L4' T8 32w/EL	trof para dbl switc	12	88	1.1	2L4' T8 28w/ELEE/RFL	rlrb RT8 kit	12	48	0.6	0.5	954	1,988
IN	Interior	2802	Wayne Hills-High School	Classroom 128 Training	1	4L4' T8 32w/EL-8'	wrap	6	112	0.7	2L4' T8 28w/ELEE HI/NEW-8'	new wrap	6	64	0.4	0.3	573	1,988
IN	Interior	2803	Wayne Hills-High School	Classroom 128 Training	1	2L4' T8 32w/EL	wrap	3	60	0.2	1L4' T8 28w/ELEE HI/NEW	new wrap	3	33	0.1	0.1	161	1,988
IN	Interior	2804	Wayne Hills-High School	Classroom 127	1	4L4' T8 32w/EL-8'	wrap	12	112	1.3	2L4' T8 28w/ELEE HI/NEW-8'	new wrap	12	64	0.8	0.6	1,145	1,988
IN	Interior	2805	Wayne Hills-High School	Classroom 127	1	2L4' T8 32w/EL	wrap	4	60	0.2	1L4' T8 28w/ELEE HI/NEW	new wrap	4	33	0.1	0.1	215	1,988
IN	Interior	2806	Wayne Hills-High School	Office 126	1	4L4' T8 32w/EL-8'	wrap	4	112	0.4	2L4' T8 28w/ELEE HI/NEW-8'	new wrap	4	64	0.3	0.2	545	2,840
IN	Interior	2807	Wayne Hills-High School	Classroom 125	1	3L4' T8 32w/EL	trof acr	12	88	1.1	2L4' T8 28w/ELEE/RFL	rlrb RT8 kit	12	48	0.6	0.5	954	1,988
IN	Interior	2808	Wayne Hills-High School	Hall 128 To 122	1	3L2' T8 17w/EL	trof acr	12	47	0.6	3L2' T8 15w/ELEE LO	rlrb	12	39	0.5	0.1	349	3,640
IN	Interior	2809	Wayne Hills-High School	Classroom 124	1	4L4' T8 32w/EL-8'	wrap	9	112	1.0	2L4' T8 28w/ELEE HI/NEW-8'	new wrap	9	64	0.6	0.4	1,227	2,840
IN	Interior	2810	Wayne Hills-High School	Classroom 122	1	4L4' T8 32w/EL-8'	wrap	6	112	0.7	2L4' T8 28w/ELEE HI/NEW-8'	new wrap	6	64	0.4	0.3	573	1,988
IN	Interior	2811	Wayne Hills-High School	Classroom 122	1	2L4' T8 32w/EL	wrap	3	60	0.2	1L4' T8 28w/ELEE HI/NEW	new wrap	3	33	0.1	0.1	161	1,988
IN	Interior	2812	Wayne Hills-High School	Classroom 122	1	4L4' T8 32w/EL-8'	wrap	9	112	1.0	2L4' T8 28w/ELEE HI/NEW-8'	new wrap	9	64	0.6	0.4	859	1,988
IN	Interior	2813	Wayne Hills-High School	Gym Main	1	400W METAL HALIDE	high bay	36	455	16.4	222 WATT LED/NEW	new LED hibay polylens	36	222	8.0	8.4	28,855	3,440
IN	Interior	2814	Wayne Hills-High School	Gym Main	1	400W METAL HALIDE	high bay	12	455	5.5	222 WATT LED/NEW	new LED hibay polylens	12	222	2.7	2.8	9,618	3,440
IN	Interior	2815	Wayne Hills-High School	Storage Mats	1	3x13W COMPACT HARDW	drum	2	45	0.1	NO RETRO	no change needed		45	0.1			500
IN	Interior	2816	Wayne Hills-High School	Storage Balls	1	2L4' T8 28w/ELEE	wrap	2	48	0.1	1L4' T8 28w/ELEE HI/NEW	new wrap	2	33	0.1	0.0	15	500
IN	Interior	2817	Wayne Hills-High School	Closet Clean	1	23W COMPACT HARDWIR	dome	1	24	0.0	NO RETRO	no change needed		24	0.0			500
IN	Interior	2818	Wayne Hills-High School	Storage Balance Beam	1	2L4' T8 28w/ELEE	wrap	1	48	0.0	1L4' T8 28w/ELEE HI/NEW	new wrap	1	33	0.0	0.0	8	500
IN	Interior	2819	Wayne Hills-High School	Storage Balance Beam	1	2L4' T8 32w/EL	old wrap	1	60	0.1	1L4' T8 28w/ELEE HI/NEW	new wrap	1	33	0.0	0.0	14	500
IN	Interior	2820	Wayne Hills-High School	Storage Equipment	1	2L4' T8 32w/EL	wrap	4	60	0.2	1L4' T8 28w/ELEE HI/NEW	new wrap	4	33	0.1	0.1	54	500
IN	Interior	2821	Wayne Hills-High School	Storage Basket Balls	1	2L4' T8 32w/EL	wrap	3	60	0.2	1L4' T8 28w/ELEE HI/NEW	new wrap	3	33	0.1	0.1	41	500
IN	Interior	2822	Wayne Hills-High School	Closet Clean	1	60W INCANDESCENT	dome	1	60	0.1	23W COMPACT SI/29712/CF23	screw in	1	23	0.0	0.0	19	500
IN	Interior	2823	Wayne Hills-High School	Lobby Main Office To 100	1	6L4' T8 32w/EL	circle	11	180	2.0	6L4' T8 28w/ELEE LO	rlrb 4L & 2L	11	126	1.4	0.6	2,162	3,640
IN	Interior	2824	Wayne Hills-High School	Lobby Main Office To 100	1	3L2' T8 17w/EL	trof acr	9	47	0.4	3L2' T8 15w/ELEE LO	rlrb	9	39	0.4	0.1	262	3,640
IN	Interior	2825	Wayne Hills-High School	Bath 108 Bt	1	2L4' T8 U/EL	trof acr	6	60	0.4	2L2' T8 15w/ELEE HI/RFL	rlrb rfl	6	33	0.2	0.2	590	3,640
IN	Interior	2826	Wayne Hills-High School	Bath 108 Gt	1	2L4' T8 U/EL	trof acr	6	60	0.4	2L2' T8 15w/ELEE HI/RFL	rlrb rfl	6	33	0.2	0.2	590	3,640
IN	Interior	2827	Wayne Hills-High School	Office Principal	1	4L4' T8 32w/EL-8'	wrap	4	112	0.4	2L4' T8 28w/ELEE HI/NEW-8'	new wrap	4	64	0.3	0.2	545	2,840
IN	Interior	2828	Wayne Hills-High School	Office Principal	1	2L4' T8 28w/ELEE	wrap	2	48	0.1	1L4' T8 28w/ELEE HI/NEW	new wrap	2	33	0.1	0.0	85	2,840
IN	Interior	2829	Wayne Hills-High School	Office Open Main	1	4L4' T8 32w/EL-8'	wrap	8	112	0.9	2L4' T8 28w/ELEE HI/NEW-8'	new wrap	8	64	0.5	0.4	1,321	3,440
IN	Interior	2830	Wayne Hills-High School	Office Open Main	1	2L4' T8 32w/EL	wrap	4	60	0.2	1L4' T8 28w/ELEE HI/NEW	new wrap	4	33	0.1	0.1	372	3,440
IN	Interior	2831	Wayne Hills-High School	Kitchen Coffee	1	3L4' T8 32w/EL	trof opaque 1' wid	4	88	0.4	3L4' T8 28w/ELEE LO	rlrb	4	63	0.3	0.1	284	2,840
IN	Interior	2832	Wayne Hills-High School	Storage Vault	1	3L4' T8 32w/EL	trof opaque 1' wid	1	88	0.1	3L4' T8 28w/ELEE LO	rlrb	1	63	0.1	0.0	13	500

In or Out	ECM	Line	Building Name	Location	Fl	Pre Fixture Description	Pre Fixture Style	Pre Qty	Pre Watts	Pre kW	Post Fixture Description	Post Fixture Style	Post Qty	Post Watts	Post kW	kW Saved	kWH Saved	Annual Hours
IN	Interior	2833	Wayne Hills-High School	Hall Main Office	1	2L4' T8 32w/EL	wrap	3	60	0.2	1L4' T8 28w/ELEE HI/NEW	new wrap	3	33	0.1	0.1	295	3,640
IN	Interior	2834	Wayne Hills-High School	Conference Main Office	1	3L4' T8 32w/EL	trof opaque 1' wid	6	88	0.5	3L4' T8 28w/ELEE LO	rlrb	6	63	0.4	0.2	426	2,840
IN	Interior	2835	Wayne Hills-High School	Office Vice Principal	1	3L4' T8 32w/EL	trof opaque 1' wid	6	88	0.5	3L4' T8 28w/ELEE LO	rlrb	6	63	0.4	0.2	426	2,840
IN	Interior	2836	Wayne Hills-High School	Office Vice Principal	1	3L4' T8 32w/EL	trof opaque 1' wid	6	88	0.5	3L4' T8 28w/ELEE LO	rlrb	6	63	0.4	0.2	426	2,840
IN	Interior	2837	Wayne Hills-High School	Office Open Guidance	1	4L4' T8 32w/EL-8'	wrap	5	112	0.6	2L4' T8 28w/ELEE HI/NEW-8'	new wrap	5	64	0.3	0.2	826	3,440
IN	Interior	2838	Wayne Hills-High School	Office Open Guidance	1	3L2' T8 17w/EL	trof acr	1	47	0.0	3L2' T8 15w/ELEE LO	rlrb	1	39	0.0	0.0	28	3,440
IN	Interior	2839	Wayne Hills-High School	Office 104C	1	3L4' T8 32w/EL	trof opaque 1' wid	4	88	0.4	3L4' T8 28w/ELEE LO	rlrb	4	63	0.3	0.1	284	2,840
IN	Interior	2840	Wayne Hills-High School	Office 104E	1	3L4' T8 32w/EL	trof opaque 1' wid	2	88	0.2	3L4' T8 28w/ELEE LO	rlrb	2	63	0.1	0.1	142	2,840
IN	Interior	2841	Wayne Hills-High School	Office 104F	1	3L4' T8 32w/EL	trof opaque 1' wid	2	88	0.2	3L4' T8 28w/ELEE LO	rlrb	2	63	0.1	0.1	142	2,840
IN	Interior	2842	Wayne Hills-High School	Office 104G	1	3L4' T8 32w/EL	trof opaque 1' wid	4	88	0.4	3L4' T8 28w/ELEE LO	rlrb	4	63	0.3	0.1	284	2,840
IN	Interior	2843	Wayne Hills-High School	Office 104H	1	3L4' T8 32w/EL	trof opaque 1' wid	2	88	0.2	3L4' T8 28w/ELEE LO	rlrb	2	63	0.1	0.1	142	2,840
IN	Interior	2844	Wayne Hills-High School	Office Open Medical Exam	1	3L4' T8 32w/EL	trof opaque 1' wid	4	88	0.4	3L4' T8 28w/ELEE LO	rlrb	4	63	0.3	0.1	344	3,440
IN	Interior	2845	Wayne Hills-High School	Office Open Nurse	1	6L4' T8 32w/EL-8'	old wrap	1	180	0.2	4L4' T8 28w/ELEE HI/NEW-8'	new wrap	1	126	0.1	0.1	186	3,440
IN	Interior	2846	Wayne Hills-High School	Office Open Nurse	1	3L4' T8 32w/EL	old wrap	1	88	0.1	2L4' T8 28w/ELEE/NEW	new wrap	1	48	0.0	0.0	138	3,440
IN	Interior	2847	Wayne Hills-High School	Office Open Nurse	1	6L4' T8 32w/EL-8'	old wrap	2	180	0.4	4L4' T8 28w/ELEE HI/NEW-8'	new wrap	2	126	0.3	0.1	372	3,440
IN	Interior	2848	Wayne Hills-High School	Office Open Nurse	1	3L4' T8 32w/EL	old wrap	2	88	0.2	2L4' T8 28w/ELEE/NEW	new wrap	2	48	0.1	0.1	275	3,440
IN	Interior	2849	Wayne Hills-High School	Office Open Nurse	1	2L4' T12 EE/EEMAG	old vanity	1	70	0.1	2L4' T8 28w/ELEE LO/NEW	new vanity	1	42	0.0	0.0	96	3,440
IN	Interior	2850	Wayne Hills-High School	Office Beds	1	3L2' T8 17w/EL	trof acr	1	47	0.0	3L2' T8 15w/ELEE LO	rlrb	1	39	0.0	0.0	23	2,840
IN	Interior	2851	Wayne Hills-High School	Office Beds	1	3L2' T8 17w/EL	trof acr	1	47	0.0	3L2' T8 15w/ELEE LO	rlrb	1	39	0.0	0.0	23	2,840
IN	Interior	2852	Wayne Hills-High School	Storage Air Handler	1	2L4' T8 28w/ELEE	wrap	1	48	0.0	1L4' T8 28w/ELEE HI/NEW	new wrap	1	33	0.0	0.0	8	500
IN	Interior	2853	Wayne Hills-High School	Bath Nurse	1	2x60W INCANDESCENTS	old drum	1	120	0.1	2L2' T8 15w/ELEE LO/NEW	new wrap	1	24	0.0	0.1	349	3,640
IN	Interior	2854	Wayne Hills-High School	Storage 100	1	2x60W INCANDESCENTS	old drum	1	120	0.1	2L2' T8 15w/ELEE LO/NEW	new wrap	1	24	0.0	0.1	48	500
IN	Interior	2855	Wayne Hills-High School	Locker 101 Boys Team	1	4L4' T8 32w/EL-8'	wrap	5	112	0.6	2L4' T8 28w/ELEE HI/NEW-8'	new wrap	5	64	0.3	0.2	874	3,640
IN	Interior	2856	Wayne Hills-High School	Locker 101 Boys Team	1	2L4' T8 28w/ELEE	wrap	1	48	0.0	1L4' T8 28w/ELEE HI/NEW	new wrap	1	33	0.0	0.0	55	3,640
IN	Interior	2857	Wayne Hills-High School	Office Exam	1	3L4' T8 32w/EL	trof acr	1	88	0.1	3L4' T8 28w/ELEE LO	rlrb	1	63	0.1	0.0	71	2,840
IN	Interior	2858	Wayne Hills-High School	Bath Exam	1	2L4' T8 28w/ELEE	wrap	1	48	0.0	1L4' T8 28w/ELEE HI/NEW	new wrap	1	33	0.0	0.0	55	3,640
IN	Interior	2859	Wayne Hills-High School	Bath Exam	1	2L4' T8 32w/EL	old vanity	1	60	0.1	2L4' T8 28w/ELEE LO/NEW	new vanity	1	42	0.0	0.0	66	3,640
IN	Interior	2860	Wayne Hills-High School	Storage Exam	1	60W INCANDESCENT	circle	2	60	0.1	2L2' T8 15w/ELEE LO/NEW	new wrap	2	24	0.0	0.1	36	500
IN	Interior	2861	Wayne Hills-High School	Storage Gatorade	1	60W INCANDESCENT	circle	3	60	0.2	2L2' T8 15w/ELEE LO/NEW	new wrap	3	24	0.1	0.1	54	500
IN	Interior	2862	Wayne Hills-High School	Locker Boys	1	2L4' T8 32w/EL	wrap	22	60	1.3	1L4' T8 28w/ELEE HI/NEW	new wrap	22	33	0.7	0.6	2,162	3,640
IN	Interior	2863	Wayne Hills-High School	Locker Shower	1	35W HI PRESSURE SODI	square recessed	10	45	0.5	23W COMPACT SI/29712/CF23	screw in	10	23	0.2	0.2	801	3,640
IN	Interior	2864	Wayne Hills-High School	Locker Toilet Area	1	2L4' T8 28w/ELEE	wrap	1	48	0.0	1L4' T8 28w/ELEE HI/NEW	new wrap	1	33	0.0	0.0	55	3,640
IN	Interior	2865	Wayne Hills-High School	Locker Toilet Area	1	2L4' T8 32w/EL	vanity	1	60	0.1	2L4' T8 28w/ELEE LO/NEW	new vanity	1	42	0.0	0.0	66	3,640
IN	Interior	2866	Wayne Hills-High School	Office Coach	1	4L4' T12 EE/EEMAG-8'	old wrap	3	140	0.4	2L4' T8 28w/ELEE HI/NEW-8'	new wrap	3	64	0.2	0.2	648	2,840
IN	Interior	2867	Wayne Hills-High School	Bath Coach	1	2L2' T12 STD/STD	vanity	1	56	0.1	2L2' T8 15w/ELEE LO/NEW	new vanity	1	24	0.0	0.0	116	3,640
IN	Interior	2868	Wayne Hills-High School	Bath Coach	1	13W COMPACT HARDWI	can rec 6"	1	15	0.0	NO RETRO	no change needed		15	0.0			3,640
IN	Interior	2869	Wayne Hills-High School	Locker Girls	1	3L4' T8 32w/EL	trof acr	2	88	0.2	3L4' T8 28w/ELEE LO	rlrb	2	63	0.1	0.1	182	3,640
IN	Interior	2870	Wayne Hills-High School	Locker Girls	1	2L4' T8 32w/EL	wrap	21	60	1.3	1L4' T8 28w/ELEE HI/NEW	new wrap	21	33	0.7	0.6	2,064	3,640
IN	Interior	2871	Wayne Hills-High School	Locker Toilet Area	1	2L4' T8 28w/ELEE	wrap	1	48	0.0	1L4' T8 28w/ELEE HI/NEW	new wrap	1	33	0.0	0.0	55	3,640
IN	Interior	2872	Wayne Hills-High School	Locker Toilet Area	1	2L4' T8 32w/EL	vanity	1	60	0.1	2L4' T8 28w/ELEE LO/NEW	new vanity	1	42	0.0	0.0	66	3,640
IN	Interior	2873	Wayne Hills-High School	Locker Shower	1	35W HI PRESSURE SODI	square recessed	10	45	0.5	23W COMPACT SI/29712/CF23	screw in	10	23	0.2	0.2	801	3,640
IN	Interior	2874	Wayne Hills-High School	Office Coach	1	4L4' T8 32w/EL-8'	wrap	3	112	0.3	2L4' T8 28w/ELEE HI/NEW-8'	new wrap	3	64	0.2	0.1	409	2,840
IN	Interior	2875	Wayne Hills-High School	Bath Coach	1	2L4' T12 EE/EEMAG	wrap	1	70	0.1	1L4' T8 28w/ELEE HI/NEW	new wrap	1	33	0.0	0.0	135	3,640
IN	Interior	2876	Wayne Hills-High School	Bath Coach	1	2L2' T8 17w/EL	vanity	1	33	0.0	2L2' T8 15w/ELEE LO/NEW	new vanity	1	24	0.0	0.0	33	3,640
IN	Interior	2877	Wayne Hills-High School	Hall By Courtyard	1	3L2' T8 17w/EL	trof acr	3	47	0.1	3L2' T8 15w/ELEE LO	rlrb	3	39	0.1	0.0	87	3,640
IN	Interior	2878	Wayne Hills-High School	Hall By Courtyard	1	13W COMPACT HARDWI	can rec 6"	2	15	0.0	NO RETRO	no change needed		15	0.0			3,640
IN	Interior	2879	Wayne Hills-High School	Office 153	1	3L4' T8 32w/EL	trof acr	4	88	0.4	3L4' T8 28w/ELEE LO	rlrb	4	63	0.3	0.1	284	2,840
IN	Interior	2880	Wayne Hills-High School	Storage Balls	1	2L4' T12 EE/EEMAG	vapor tight	1	70	0.1	2L4' T8 28w/ELEE LO	rlrb	1	42	0.0	0.0	14	500

In or Out	ECM	Line	Building Name	Location	Fl	Pre Fixture Description	Pre Fixture Style	Pre Qty	Pre Watts	Pre kW	Post Fixture Description	Post Fixture Style	Post Qty	Post Watts	Post kW	kW Saved	kWH Saved	Annual Hours
IN	Interior	2881	Wayne Hills-High School	Office 152	1	3L4' T8 32w/EL	trof acr	3	88	0.3	3L4' T8 28w/ELEE LO	rlrb	3	63	0.2	0.1	213	2,840
IN	Interior	2882	Wayne Hills-High School	Office 152	1	3L4' T8 32w/EL	trof acr	1	88	0.1	3L4' T8 28w/ELEE LO	rlrb	1	63	0.1	0.0	71	2,840
IN	Interior	2883	Wayne Hills-High School	Locker 150 Coach	1	3L2' T8 17w/EL	trof acr	1	47	0.0	3L2' T8 15w/ELEE LO	rlrb	1	39	0.0	0.0	29	3,640
IN	Interior	2884	Wayne Hills-High School	Locker 150 Coach	1	3L4' T8 32w/EL	trof acr	3	88	0.3	3L4' T8 28w/ELEE LO	rlrb	3	63	0.2	0.1	273	3,640
IN	Interior	2885	Wayne Hills-High School	Bath 150 Coach	1	2L4' T8 32w/EL	old wrap	2	60	0.1	1L4' T8 28w/ELEE HI/NEW	new wrap	2	33	0.1	0.1	197	3,640
IN	Interior	2886	Wayne Hills-High School	Bath 150 Coach	1	2L2' T12 STD/STD	old vanity	1	56	0.1	2L2' T8 15w/ELEE LO/NEW	new vanity	1	24	0.0	0.0	116	3,640
IN	Interior	2887	Wayne Hills-High School	Locker 149 Girls	1	3L2' T8 17w/EL	trof acr	5	47	0.2	3L2' T8 15w/ELEE LO	rlrb	5	39	0.2	0.0	146	3,640
IN	Interior	2888	Wayne Hills-High School	Storage Cheerleading	1	1L4' T8 32w/EL	old wrap narrow	1	30	0.0	1L4' T8 28w/ELEE HI/NEW	new wrap	1	33	0.0	0.0	-2	500
IN	Interior	2889	Wayne Hills-High School	Storage B	1	1L4' T8 32w/EL	old wrap narrow	1	30	0.0	1L4' T8 28w/ELEE HI/NEW	new wrap	1	33	0.0	0.0	-2	500
IN	Interior	2890	Wayne Hills-High School	Storage C	1	1L4' T8 32w/EL	old wrap narrow	1	30	0.0	1L4' T8 28w/ELEE HI/NEW	new wrap	1	33	0.0	0.0	-2	500
IN	Interior	2891	Wayne Hills-High School	Storage D	1	1L4' T8 32w/EL	old wrap narrow	1	30	0.0	1L4' T8 28w/ELEE HI/NEW	new wrap	1	33	0.0	0.0	-2	500
IN	Interior	2892	Wayne Hills-High School	Locker Shower Area	1	2L4' T8 32w/EL	vapor tight	8	60	0.5	2L4' T8 28w/ELEE LO	rlrb	8	42	0.3	0.1	524	3,640
IN	Interior	2893	Wayne Hills-High School	Locker 149 Girls	1	2L4' T8 32w/EL	trof acr 1' wide	20	60	1.2	2L4' T8 28w/ELEE LO	rlrb	20	42	0.8	0.4	1,310	3,640
IN	Interior	2894	Wayne Hills-High School	Bath Girls	1	2L4' T8 28w/ELEE	wrap	2	48	0.1	1L4' T8 28w/ELEE HI/NEW	new wrap	2	33	0.1	0.0	109	3,640
IN	Interior	2895	Wayne Hills-High School	Storage E	1	60W INCANDESCENT	keyless	1	60	0.1	2L2' T8 15w/ELEE LO/NEW	new wrap	1	24	0.0	0.0	18	500
IN	Interior	2896	Wayne Hills-High School	Office Coach	1	3L4' T8 32w/EL	trof acr	4	88	0.4	3L4' T8 28w/ELEE LO	rlrb	4	63	0.3	0.1	284	2,840
IN	Interior	2897	Wayne Hills-High School	Bath Coach	1	60W INCANDESCENT	can rec 6"	1	60	0.1	11 WATT LED SI/LED10Par20/D	screw in led	1	11	0.0	0.0	178	3,640
IN	Interior	2898	Wayne Hills-High School	Bath Coach	1	2L2' T8 17w/EL	vanity	1	33	0.0	2L2' T8 15w/ELEE LO/NEW	new vanity	1	24	0.0	0.0	33	3,640
IN	Interior	2899	Wayne Hills-High School	Hall By East 6	1	3L4' T8 32w/EL	trof acr	3	88	0.3	3L4' T8 28w/ELEE LO	rlrb	3	63	0.2	0.1	273	3,640
IN	Interior	2900	Wayne Hills-High School	Gym Girls	1	400W METAL HALIDE	trof acr	56	455	25.5	138 WATT LED/NEW	new LED RLE7200 box	56	138	7.7	17.8	61,067	3,440
IN	Interior	2901	Wayne Hills-High School	Storage Volley Balls	1	4L4' T8 32w/EL-8'	wrap	2	112	0.2	2L4' T8 28w/ELEE HI/NEW-8'	new wrap	2	64	0.1	0.1	48	500
IN	Interior	2902	Wayne Hills-High School	Hall 145 Boys	1	3L2' T8 17w/EL	trof acr	4	47	0.2	3L2' T8 15w/ELEE LO	rlrb	4	39	0.2	0.0	116	3,640
IN	Interior	2903	Wayne Hills-High School	Storage Cooler	1	1L4' T8 32w/EL	old wrap narrow	1	30	0.0	1L4' T8 28w/ELEE HI/NEW	new wrap	1	33	0.0	0.0	-2	500
IN	Interior	2904	Wayne Hills-High School	Storage Fencing	1	1L4' T8 32w/EL	old wrap narrow	1	30	0.0	1L4' T8 28w/ELEE HI/NEW	new wrap	1	33	0.0	0.0	-2	500
IN	Interior	2905	Wayne Hills-High School	Storage Foot Pylons	1	1L4' T8 32w/EL	old wrap narrow	1	30	0.0	1L4' T8 28w/ELEE HI/NEW	new wrap	1	33	0.0	0.0	-2	500
IN	Interior	2906	Wayne Hills-High School	Storage Uniforms	1	1L4' T8 32w/EL	old wrap narrow	1	30	0.0	1L4' T8 28w/ELEE HI/NEW	new wrap	1	33	0.0	0.0	-2	500
IN	Interior	2907	Wayne Hills-High School	Locker 145 Boys	1	4L4' T8 32w/EL	trof acr	16	112	1.8	2L4' T8 28w/ELEE HI/RFL	rlrb rfl	16	64	1.0	0.8	2,796	3,640
IN	Interior	2908	Wayne Hills-High School	Locker 145 Boys	1	2L4' T8 32w/EL	trof acr 1' wide	3	60	0.2	2L4' T8 28w/ELEE LO	rlrb	3	42	0.1	0.1	197	3,640
IN	Interior	2909	Wayne Hills-High School	Locker 145 Boys	1	3L2' T8 17w/EL	trof acr	2	47	0.1	3L2' T8 15w/ELEE LO	rlrb	2	39	0.1	0.0	58	3,640
IN	Interior	2910	Wayne Hills-High School	Locker Shower Area	1	2L4' T8 32w/EL	vapor tight	8	60	0.5	2L4' T8 28w/ELEE LO	rlrb	8	42	0.3	0.1	524	3,640
IN	Interior	2911	Wayne Hills-High School	Office Coach	1	4L4' T8 32w/EL	trof acr	4	112	0.4	2L4' T8 28w/ELEE HI/RFL	rlrb rfl	4	64	0.3	0.2	545	2,840
IN	Interior	2912	Wayne Hills-High School	Bath Coach	1	23W COMPACT HARDWI	can rec 6"	1	24	0.0	NO RETRO	no change needed		24	0.0			3,640
IN	Interior	2913	Wayne Hills-High School	Bath Coach	1	2L2' T8 17w/EL	vanity	1	33	0.0	2L2' T8 15w/ELEE LO/NEW	new vanity	1	24	0.0	0.0	33	3,640
IN	Interior	2914	Wayne Hills-High School	Closet Clean	1	23W COMPACT HARDWI	keyless	1	24	0.0	NO RETRO	no change needed		24	0.0			500
IN	Interior	2915	Wayne Hills-High School	Locker Toilet	1	4L4' T8 32w/EL	wrap	1	112	0.1	2L4' T8 28w/ELEE HI/NEW	new wrap wide	1	64	0.1	0.0	175	3,640
IN	Interior	2916	Wayne Hills-High School	Locker Hall	1	3L2' T8 17w/EL	trof acr	2	47	0.1	3L2' T8 15w/ELEE LO	rlrb	2	39	0.1	0.0	58	3,640
IN	Interior	2917	Wayne Hills-High School	Hall By Stair East 8	1	4L4' T8 32w/EL	trof acr	3	112	0.3	2L4' T8 28w/ELEE HI/RFL	rlrb rfl	3	64	0.2	0.1	524	3,640
IN	Interior	2918	Wayne Hills-High School	Locker 147	1	4L4' T8 32w/EL-8'	trof acr 1' wide	2	112	0.2	4L4' T8 28w/ELEE LO-8'	rlrb	2	83	0.2	0.1	211	3,640
IN	Interior	2919	Wayne Hills-High School	Locker 147	1	2L4' T8 32w/EL	trof acr 1' wide	6	60	0.4	2L4' T8 28w/ELEE LO	rlrb	6	42	0.3	0.1	393	3,640
IN	Interior	2920	Wayne Hills-High School	Locker 147	1	2L4' T8 32w/EL	vapor tight	3	60	0.2	2L4' T8 28w/ELEE LO	rlrb	3	42	0.1	0.1	197	3,640
IN	Interior	2921	Wayne Hills-High School	Office Coach	1	3L4' T8 32w/EL	trof acr	4	88	0.4	3L4' T8 28w/ELEE LO	rlrb	4	63	0.3	0.1	284	2,840
IN	Interior	2922	Wayne Hills-High School	Bath Boys	1	4L4' T8 32w/EL-8'	wrap	2	112	0.2	2L4' T8 28w/ELEE HI/NEW-8'	new wrap	2	64	0.1	0.1	349	3,640
IN	Interior	2923	Wayne Hills-High School	Bath Boys	1	2L4' T8 28w/ELEE	wrap	1	48	0.0	1L4' T8 28w/ELEE HI/NEW	new wrap	1	33	0.0	0.0	55	3,640
IN	Interior	2924	Wayne Hills-High School	Bath Girls	1	4L4' T8 32w/EL-8'	wrap	2	112	0.2	2L4' T8 28w/ELEE HI/NEW-8'	new wrap	2	64	0.1	0.1	349	3,640
IN	Interior	2925	Wayne Hills-High School	Bath Girls	1	2L4' T8 28w/ELEE	wrap	1	48	0.0	1L4' T8 28w/ELEE HI/NEW	new wrap	1	33	0.0	0.0	55	3,640
IN	Interior	2926	Wayne Hills-High School	Classroom 144	1	2L4' T8 32w/EL	trof acr	4	60	0.2	2L4' T8 28w/ELEE/RFL	rlrb RT8 kit	4	48	0.2	0.0	95	1,988
IN	Interior	2927	Wayne Hills-High School	Classroom 144	1	3L4' T8 32w/EL	trof acr	16	88	1.4	2L4' T8 28w/ELEE/RFL	rlrb RT8 kit	16	48	0.8	0.6	1,272	1,988
IN	Interior	2928	Wayne Hills-High School	Classroom 142	1	3L4' T8 32w/EL	trof acr	6	88	0.5	2L4' T8 28w/ELEE/RFL	rlrb RT8 kit	6	48	0.3	0.2	682	2,840

In or Out	ECM	Line	Building Name	Location	Fl	Pre Fixture Description	Pre Fixture Style	Pre Qty	Pre Watts	Pre kW	Post Fixture Description	Post Fixture Style	Post Qty	Post Watts	Post kW	kW Saved	kWH Saved	Annual Hours
IN	Interior	2929	Wayne Hills-High School	Storage 142	1	3L4' T8 32w/EL	trof acr	1	88	0.1	3L4' T8 28w/ELEE LO	rlrb	1	63	0.1	0.0	13	500
IN	Interior	2930	Wayne Hills-High School	Classroom 141	1	2L4' T8 32w/EL	trof acr	4	60	0.2	2L4' T8 28w/ELEE/RFL	rlrb RT8 kit	4	48	0.2	0.0	95	1,988
IN	Interior	2931	Wayne Hills-High School	Classroom 141	1	3L4' T8 32w/EL	trof acr	13	88	1.1	2L4' T8 28w/ELEE/RFL	rlrb RT8 kit	13	48	0.6	0.5	1,034	1,988
IN	Interior	2932	Wayne Hills-High School	Storage Tennis Balls	1	3L4' T8 32w/EL	trof acr	1	88	0.1	3L4' T8 28w/ELEE LO	rlrb	1	63	0.1	0.0	13	500
IN	Interior	2933	Wayne Hills-High School	Office 141	1	3L4' T8 32w/EL	trof acr	2	88	0.2	3L4' T8 28w/ELEE LO	rlrb	2	63	0.1	0.1	142	2,840
IN	Interior	2934	Wayne Hills-High School	Storage 141 Books	1	3L4' T8 32w/EL	trof acr	1	88	0.1	3L4' T8 28w/ELEE LO	rlrb	1	63	0.1	0.0	13	500
IN	Interior	2935	Wayne Hills-High School	Storage 139	1	3L4' T8 32w/EL	trof acr	6	88	0.5	3L4' T8 28w/ELEE LO	rlrb	6	63	0.4	0.2	75	500
IN	Interior	2936	Wayne Hills-High School	Classroom 137	1	3L4' T8 32w/EL	trof acr	15	88	1.3	2L4' T8 28w/ELEE/RFL	rlrb RT8 kit	15	48	0.7	0.6	1,704	2,840
IN	Interior	2937	Wayne Hills-High School	Bath 137 T	1	2L4' T8 28w/ELEE	trof acr	1	48	0.0	2L4' T8 28w/ELEE LO	rlrb	1	42	0.0	0.0	22	3,640
IN	Interior	2938	Wayne Hills-High School	Storage 137	1	3L4' T8 32w/EL	trof acr	2	88	0.2	3L4' T8 28w/ELEE LO	rlrb	2	63	0.1	0.1	25	500
IN	Interior	2939	Wayne Hills-High School	Storage Air Handler	1	4L4' T8 32w/EL-8'	strip reflector	1	112	0.1	4L4' T8 28w/ELEE LO-8'	rlrb	1	83	0.1	0.0	15	500
IN	Interior	2940	Wayne Hills-High School	Classroom 140	1	3L4' T8 32w/EL	trof acr	20	88	1.8	2L4' T8 28w/ELEE/RFL	rlrb RT8 kit	20	48	1.0	0.8	2,272	2,840
IN	Interior	2941	Wayne Hills-High School	Classroom 138	1	4L4' T8 32w/EL	trof para dbl switc	6	112	0.7	2L4' T8 28w/ELEE/RFL	rlrb RT8 kit	6	48	0.3	0.4	763	1,988
IN	Interior	2942	Wayne Hills-High School	Hall Guidance	1	3L2' T8 17w/EL	trof acr	9	47	0.4	3L2' T8 15w/ELEE LO	rlrb	9	39	0.4	0.1	262	3,640
IN	Interior	2943	Wayne Hills-High School	Office 136 Ao	1	4L4' T8 32w/EL	trof para dbl switc	2	112	0.2	4L4' T8 28w/ELEE LO (2Lx2 BAI	rlrb dbl switched	2	84	0.2	0.1	111	1,988
IN	Interior	2944	Wayne Hills-High School	Hall 152 To 130	1	3L2' T8 17w/EL	trof acr	45	47	2.1	3L2' T8 15w/ELEE LO	rlrb	45	39	1.8	0.4	1,310	3,640
IN	Interior	2945	Wayne Hills-High School	Hall Display Case	1	2L4' T12 EE/EEMAG	old wrap	8	70	0.6	1L4' T8 28w/ELEE HI/NEW	new wrap	8	33	0.3	0.3	1,077	3,640
IN	Interior	2946	Wayne Hills-High School	Office 136 Bo	1	3L4' T8 32w/EL	trof para dbl switc	4	88	0.4	3L4' T8 28w/ELEE LO (1L&2L BA	rlrb dbl switched	4	64	0.3	0.1	191	1,988
IN	Interior	2947	Wayne Hills-High School	Office Counselor	1	3L4' T8 32w/EL	trof acr	6	88	0.5	3L4' T8 28w/ELEE LO	rlrb	6	63	0.4	0.2	426	2,840
IN	Interior	2948	Wayne Hills-High School	Office Mann	1	3L4' T8 32w/EL	trof acr	4	88	0.4	3L4' T8 28w/ELEE LO	rlrb	4	63	0.3	0.1	284	2,840
IN	Interior	2949	Wayne Hills-High School	Office Chiller	1	3L4' T8 32w/EL	trof acr	4	88	0.4	3L4' T8 28w/ELEE LO	rlrb	4	63	0.3	0.1	284	2,840
IN	Interior	2950	Wayne Hills-High School	Office Keogh	1	3L4' T8 32w/EL	trof acr	4	88	0.4	3L4' T8 28w/ELEE LO	rlrb	4	63	0.3	0.1	284	2,840
IN	Interior	2951	Wayne Hills-High School	Office Savastano	1	3L4' T8 32w/EL	trof acr	4	88	0.4	3L4' T8 28w/ELEE LO	rlrb	4	63	0.3	0.1	284	2,840
IN	Interior	2952	Wayne Hills-High School	Office Gorkowski	1	3L4' T8 32w/EL	trof acr	6	88	0.5	3L4' T8 28w/ELEE LO	rlrb	6	63	0.4	0.2	426	2,840
IN	Interior	2953	Wayne Hills-High School	Kitchen	1	3L4' T8 32w/EL	trof acr	4	88	0.4	3L4' T8 28w/ELEE LO	rlrb	4	63	0.3	0.1	284	2,840
IN	Interior	2954	Wayne Hills-High School	Office Open Guidance	1	3L4' T8 32w/EL	trof acr	6	88	0.5	3L4' T8 28w/ELEE LO	rlrb	6	63	0.4	0.2	516	3,440
IN	Interior	2955	Wayne Hills-High School	Storage Decorations	1	3L4' T8 32w/EL	trof acr	1	88	0.1	3L4' T8 28w/ELEE LO	rlrb	1	63	0.1	0.0	13	500
IN	Interior	2956	Wayne Hills-High School	Bath 133 Wt	1	2L4' T8 32w/EL	old wrap	1	60	0.1	1L4' T8 28w/ELEE HI/NEW	new wrap	1	33	0.0	0.0	98	3,640
IN	Interior	2957	Wayne Hills-High School	Bath 133 Wt	1	4L4' T8 32w/EL-8'	old wrap	1	112	0.1	2L4' T8 28w/ELEE HI/NEW-8'	new wrap	1	64	0.1	0.0	175	3,640
IN	Interior	2958	Wayne Hills-High School	Bath 133 Wt	1	2L2' T12 STD/STD	old vanity	1	56	0.1	2L2' T8 15w/ELEE LO/NEW	new vanity	1	24	0.0	0.0	116	3,640
IN	Interior	2959	Wayne Hills-High School	Bath 133 Mt	1	2L4' T8 32w/EL	old wrap	1	60	0.1	1L4' T8 28w/ELEE HI/NEW	new wrap	1	33	0.0	0.0	98	3,640
IN	Interior	2960	Wayne Hills-High School	Bath 133 Mt	1	4L4' T8 32w/EL-8'	old wrap	1	112	0.1	2L4' T8 28w/ELEE HI/NEW-8'	new wrap	1	64	0.1	0.0	175	3,640
IN	Interior	2961	Wayne Hills-High School	Bath 133 Mt	1	2L2' T12 STD/STD	old vanity	1	56	0.1	2L2' T8 15w/ELEE LO/NEW	new vanity	1	24	0.0	0.0	116	3,640
IN	Interior	2962	Wayne Hills-High School	Hall Stair West 4 To West 3	1	3L2' T8 17w/EL	trof acr	3	47	0.1	3L2' T8 15w/ELEE LO	rlrb	3	39	0.1	0.0	87	3,640
IN	Interior	2963	Wayne Hills-High School	Hall Stair West 4 To West 3	1	13W COMPACT HARDWI	can rec 6"	2	15	0.0	NO RETRO	no change needed		15	0.0			3,640
IN	Interior	2964	Wayne Hills-High School	Classroom 134	1	3L4' T8 32w/EL	trof acr	21	88	1.8	2L4' T8 28w/ELEE/RFL	rlrb RT8 kit	21	48	1.0	0.8	1,670	1,988
IN	Interior	2965	Wayne Hills-High School	Classroom 134	1	3L4' T8 32w/EL	trof acr	7	88	0.6	2L4' T8 28w/ELEE/RFL	rlrb RT8 kit	7	48	0.3	0.3	795	2,840
IN	Interior	2966	Wayne Hills-High School	Bath 133Gt	1	2L4' T8 U/EL	box acrylic	5	60	0.3	2L2' T8 15w/ELEE HI/RFL	rlrb rfl	5	33	0.2	0.1	491	3,640
IN	Interior	2967	Wayne Hills-High School	Closet Clean	1	1L4' T8 32w/EL	old wrap narrow	1	30	0.0	1L4' T8 28w/ELEE HI/NEW	new wrap	1	33	0.0	0.0	-2	500
IN	Interior	2968	Wayne Hills-High School	Bath 133Bt	1	2L4' T8 32w/EL	old wrap	6	60	0.4	1L4' T8 28w/ELEE HI/NEW	new wrap	6	33	0.2	0.2	590	3,640
IN	Interior	2969	Wayne Hills-High School	Classroom 130	1	3L4' T8 32w/EL	trof acr	3	88	0.3	2L4' T8 28w/ELEE/RFL	rlrb RT8 kit	3	48	0.1	0.1	239	1,988
IN	Interior	2970	Wayne Hills-High School	Classroom 130	1	2L4' T8 28w/ELEE	trof acr	1	48	0.0	2L4' T8 28w/ELEE/RFL	rlrb RT8 kit	1	48	0.0			1,988
IN	Interior	2971	Wayne Hills-High School	Classroom 130	1	3L4' T8 32w/EL	trof acr	9	88	0.8	2L4' T8 28w/ELEE/RFL	rlrb RT8 kit	9	48	0.4	0.4	716	1,988
IN	Interior	2972	Wayne Hills-High School	Classroom 130	1	2L4' T8 32w/EL	trof acr	3	60	0.2	2L4' T8 28w/ELEE/RFL	rlrb RT8 kit	3	48	0.1	0.0	72	1,988
IN	Interior	2973	Wayne Hills-High School	Kitchen 131 Prep Area	1	3L4' T8 32w/EL	trof acr	13	88	1.1	3L4' T8 28w/ELEE LO	rlrb	13	63	0.8	0.3	923	2,840
IN	Interior	2974	Wayne Hills-High School	Kitchen Grease Hood	1	2L2' T12 STD/STD	trof acr 1' wide	1	56	0.1	2L2' T8 15w/ELEE LO	rlrb	1	27	0.0	0.0	82	2,840
IN	Interior	2975	Wayne Hills-High School	Cafeteria Seating Area	1	3L4' T8 32w/EL	trof acr	12	88	1.1	2L4' T8 28w/ELEE HI/RFL	rlrb RT8 kit	12	64	0.8	0.3	991	3,440
IN	Interior	2976	Wayne Hills-High School	Cafeteria Seating Area	1	3L4' T8 32w/EL	trof acr	12	88	1.1	2L4' T8 28w/ELEE HI/RFL	rlrb RT8 kit	12	64	0.8	0.3	991	3,440

In or Out	ECM	Line	Building Name	Location	Fl	Pre Fixture Description	Pre Fixture Style	Pre Qty	Pre Watts	Pre kW	Post Fixture Description	Post Fixture Style	Post Qty	Post Watts	Post kW	kW Saved	kWH Saved	Annual Hours
IN	Interior	2977	Wayne Hills-High School	Cafeteria Seating Area	1	3L4' T8 32w/EL	trof acr	12	88	1.1	2L4' T8 28w/ELEE HI/RFL	rlrb RT8 kit	12	64	0.8	0.3	991	3,440
IN	Interior	2978	Wayne Hills-High School	Cafeteria Seating Area	1	3L4' T8 32w/EL	trof acr	12	88	1.1	2L4' T8 28w/ELEE HI/RFL	rlrb RT8 kit	12	64	0.8	0.3	991	3,440
IN	Exterior	2979	Wayne Hills-High School	Bldg Mt Fixture 1	ext	3x13W COMPACT HARDV	drum	8	45	0.4	NO RETRO	no change needed		45	0.4			4,380
IN	Exterior	2980	Wayne Hills-High School	Bldg Mt Fixture 2	ext	70W HI PRESSURE SODI	can rec 12"	2	90	0.2	21 WATT LED SI/LED21Par38/D	screw in led	2	21	0.0	0.1	604	4,380
IN	Exterior	2981	Wayne Hills-High School	Bldg Mt Fixture 3	ext	23W COMPACT HARDWI	can rec 6"	85	24	2.0	NO RETRO	no change needed		24	2.0			4,380
IN	Exterior	2982	Wayne Hills-High School	Bldg Mt Fixture 4	ext	72W COMPACT SCREWI	flood	1	72	0.1	NO RETRO	no change needed		72	0.1			4,380
IN	Exterior	2983	Wayne Hills-High School	Bldg Mt Fixture 5	ext	50W HI PRESSURE SODI	wallpack	5	65	0.3	26 WATT LED/NEW	new LED wallpack	5	26	0.1	0.2	854	4,380
IN	Exterior	2984	Wayne Hills-High School	Bldg Mt Fixture 6	ext	250W HI PRESSURE SOD	wallpack	1	295	0.3	133 WATT LED/NEW	new LED wallpack	1	133	0.1	0.2	710	4,380
IN	Exterior	2985	Wayne Hills-High School	Bldg Mt Fixture 7	ext	90W INCANDESCENT	cylinder wall mt.	14	90	1.3	21 WATT LED SI/LED21Par38/D	screw in led	14	21	0.3	1.0	4,231	4,380
IN	Exterior	2986	Wayne Hills-High School	Bldg Mt Fixture 8	ext	2x26W COMPACT HARDV	square surface mt	9	54	0.5	NO RETRO	no change needed		54	0.5			4,380
IN	Exterior	2987	Wayne Hills-High School	Bldg Mt Fixture 9	ext	90W INCANDESCENT	flood	6	90	0.5	49 WATT LED/NEW	new LED flood	6	49	0.3	0.2	1,077	4,380
IN	Exterior	2988	Wayne Hills-High School	Bldg Mt Fixture 10	ext	70W HI PRESSURE SODI	square recessed	1	90	0.1	23W COMPACT SI/29712/CF23	screw in	1	23	0.0	0.1	293	4,380
IN	Interior	2989	Preakness (Library Commun	Stair By Classroom 2	s	3L4' T8 32w/EL	trof acr	5	88	0.4	3L4' T8 28w/ELEE LO	rlrb	5	63	0.3	0.1	453	3,620
IN	Interior	2990	Preakness (Library Commun	Hall 2Nd Floor	2	3L4' T8 32w/EL	trof acr	6	88	0.5	3L4' T8 28w/ELEE LO	rlrb	6	63	0.4	0.2	543	3,620
IN	Interior	2991	Preakness (Library Commun	Closet Clean	2	23W COMPACT HARDWI	keyless	1	24	0.0	NO RETRO	no change needed		24	0.0			500
IN	Interior	2992	Preakness (Library Commun	Bath Men	2	3L4' T8 32w/EL	trof acr	2	88	0.2	3L4' T8 28w/ELEE LO	rlrb	2	63	0.1	0.1	166	3,320
IN	Interior	2993	Preakness (Library Commun	Classroom 4	2	3L4' T8 32w/EL	trof acr	5	88	0.4	2L4' T8 28w/ELEE HI/RFL	rlrb RT8 kit	5	64	0.3	0.1	302	2,520
IN	Interior	2994	Preakness (Library Commun	Classroom 4	2	3L4' T8 32w/EL	trof acr	6	88	0.5	2L4' T8 28w/ELEE HI/RFL	rlrb RT8 kit	6	64	0.4	0.1	363	2,520
IN	Interior	2995	Preakness (Library Commun	Classroom 2	2	3L4' T8 32w/EL	trof acr	4	88	0.4	2L4' T8 28w/ELEE HI/RFL	rlrb RT8 kit	4	64	0.3	0.1	242	2,520
IN	Interior	2996	Preakness (Library Commun	Classroom 2	2	3L4' T8 32w/EL	trof acr	5	88	0.4	2L4' T8 28w/ELEE HI/RFL	rlrb RT8 kit	5	64	0.3	0.1	302	2,520
IN	Interior	2997	Preakness (Library Commun	Classroom 3	2	3L4' T8 32w/EL	trof acr	5	88	0.4	2L4' T8 28w/ELEE HI/RFL	rlrb RT8 kit	5	64	0.3	0.1	302	2,520
IN	Interior	2998	Preakness (Library Commun	Classroom 3	2	3L4' T8 32w/EL	trof acr	6	88	0.5	2L4' T8 28w/ELEE HI/RFL	rlrb RT8 kit	6	64	0.4	0.1	363	2,520
IN	Interior	2999	Preakness (Library Commun	Closet 3	2	3L4' T8 32w/EL	trof acr	1	88	0.1	3L4' T8 28w/ELEE LO	rlrb	1	63	0.1	0.0	13	500
IN	Interior	3000	Preakness (Library Commun	Classroom 1	2	3L4' T8 32w/EL	trof acr	4	88	0.4	2L4' T8 28w/ELEE HI/RFL	rlrb RT8 kit	4	64	0.3	0.1	242	2,520
IN	Interior	3001	Preakness (Library Commun	Classroom 1	2	3L4' T8 32w/EL	trof acr	4	88	0.4	2L4' T8 28w/ELEE HI/RFL	rlrb RT8 kit	4	64	0.3	0.1	242	2,520
IN	Interior	3002	Preakness (Library Commun	Hall Main Office	2	3L4' T8 32w/EL	wrap	1	88	0.1	2L4' T8 28w/ELEE HI/NEW	new wrap wide	1	64	0.1	0.0	87	3,620
IN	Interior	3003	Preakness (Library Commun	Hall Main Office	2	1L4' T8 32w/EL	old wrap narrow	1	30	0.0	1L4' T8 28w/ELEE HI/NEW	new wrap	1	33	0.0	0.0	-11	3,620
IN	Interior	3004	Preakness (Library Commun	Office Old Projection Room	2	100W INCANDESCENT	keyless	1	100	0.1	2L2' T8 15w/ELEE LO/NEW	new wrap	1	24	0.0	0.1	176	2,320
IN	Interior	3005	Preakness (Library Commun	Office Main	2	2L4' T8 U/EL	box acrylic	1	60	0.1	2L2' T8 15w/ELEE HI/RFL	rlrb rfl	1	33	0.0	0.0	63	2,320
IN	Interior	3006	Preakness (Library Commun	Closet By Main Office	2	100W INCANDESCENT	jar	1	100	0.1	23W COMPACT SI/29712/CF23	screw in	1	23	0.0	0.1	39	500
IN	Interior	3007	Preakness (Library Commun	Bath Women	2	3L4' T8 32w/EL	trof acr	3	88	0.3	3L4' T8 28w/ELEE LO	rlrb	3	63	0.2	0.1	249	3,320
IN	Interior	3008	Preakness (Library Commun	Closet Clean	2	100W INCANDESCENT	exhaust fan light	1	100	0.1	11W COMPACT SI/29708/CF11	screw in	1	11	0.0	0.1	45	500
IN	Interior	3009	Preakness (Library Commun	Stair	s	3L4' T8 32w/EL	trof acr	5	88	0.4	3L4' T8 28w/ELEE LO	rlrb	5	63	0.3	0.1	453	3,620
IN	Interior	3010	Preakness (Library Commun	Hall 11 To 12	1	3L4' T8 32w/EL	trof acr	6	88	0.5	3L4' T8 28w/ELEE LO	rlrb	6	63	0.4	0.2	543	3,620
IN	Interior	3011	Preakness (Library Commun	Closet Clean	1	2x60W INCANDESCENTS	old drum	1	120	0.1	2L2' T8 15w/ELEE LO/NEW	new wrap	1	24	0.0	0.1	48	500
IN	Interior	3012	Preakness (Library Commun	Bath Women	1	3L4' T8 32w/EL	trof acr	3	88	0.3	3L4' T8 28w/ELEE LO	rlrb	3	63	0.2	0.1	249	3,320
IN	Interior	3013	Preakness (Library Commun	Classroom 3	1	3L4' T8 32w/EL	trof acr	6	88	0.5	2L4' T8 28w/ELEE HI/RFL	rlrb RT8 kit	6	64	0.4	0.1	363	2,520
IN	Interior	3014	Preakness (Library Commun	Classroom 3	1	3L4' T8 32w/EL	trof acr	4	88	0.4	2L4' T8 28w/ELEE HI/RFL	rlrb RT8 kit	4	64	0.3	0.1	242	2,520
IN	Interior	3015	Preakness (Library Commun	Classroom 1	1	3L4' T8 32w/EL	trof acr	4	88	0.4	2L4' T8 28w/ELEE HI/RFL	rlrb RT8 kit	4	64	0.3	0.1	242	2,520
IN	Interior	3016	Preakness (Library Commun	Classroom 1	1	3L4' T8 32w/EL	trof acr	6	88	0.5	2L4' T8 28w/ELEE HI/RFL	rlrb RT8 kit	6	64	0.4	0.1	363	2,520
IN	Interior	3017	Preakness (Library Commun	Closet 1	1	60W INCANDESCENT	keyless	1	60	0.1	23W COMPACT SI/29712/CF23	screw in	1	23	0.0	0.0	19	500
IN	Interior	3018	Preakness (Library Commun	Storage Server	1	3L4' T8 32w/EL	trof acr	1	88	0.1	3L4' T8 28w/ELEE LO	rlrb	1	63	0.1	0.0	13	500
IN	Interior	3019	Preakness (Library Commun	Office 1	1	3L4' T8 32w/EL	trof acr	2	88	0.2	3L4' T8 28w/ELEE LO	rlrb	2	63	0.1	0.1	116	2,320
IN	Interior	3020	Preakness (Library Commun	Classroom 4	1	4L4' T8 32w/EL-8'	old wrap	6	112	0.7	2L4' T8 28w/ELEE HI/NEW-8'	new wrap	6	64	0.4	0.3	726	2,520
IN	Interior	3021	Preakness (Library Commun	Classroom 4	1	2L4' T8 32w/EL	old wrap	3	60	0.2	1L4' T8 28w/ELEE HI/NEW	new wrap	3	33	0.1	0.1	204	2,520
IN	Interior	3022	Preakness (Library Commun	Classroom 4	1	4L4' T8 32w/EL-8'	old wrap	3	112	0.3	2L4' T8 28w/ELEE HI/NEW-8'	new wrap	3	64	0.2	0.1	363	2,520
IN	Interior	3023	Preakness (Library Commun	Classroom 4	1	2L4' T8 32w/EL	old wrap	1	60	0.1	1L4' T8 28w/ELEE HI/NEW	new wrap	1	33	0.0	0.0	68	2,520
IN	Interior	3024	Preakness (Library Commun	Classroom 2	1	4L4' T8 32w/EL-8'	old wrap	9	112	1.0	2L4' T8 28w/ELEE HI/NEW-8'	new wrap	9	64	0.6	0.4	1,089	2,520

In or Out	ECM	Line	Building Name	Location	Fl	Pre Fixture Description	Pre Fixture Style	Pre Qty	Pre Watts	Pre kW	Post Fixture Description	Post Fixture Style	Post Qty	Post Watts	Post kW	kW Saved	kWH Saved	Annual Hours
IN	Interior	3025	Preakness (Library Commun	Classroom 2	1	2L4' T8 32w/EL	old wrap	3	60	0.2	1L4' T8 28w/ELEE HI/NEW	new wrap	3	33	0.1	0.1	204	2,520
IN	Interior	3026	Preakness (Library Commun	Bath Boys	1	3L4' T8 32w/EL	trof acr	3	88	0.3	3L4' T8 28w/ELEE LO	rlrb	3	63	0.2	0.1	249	3,320
IN	Interior	3027	Preakness (Library Commun	Closet Clean	1	60W INCANDESCENT	keyless	1	60	0.1	23W COMPACT SI/29712/CF23	screw in	1	23	0.0	0.0	19	500
IN	Interior	3028	Preakness (Library Commun	Stair To Main Lobby	s	2L4' T8 32w/EL	trof acr	1	60	0.1	2L4' T8 28w/ELEE LO	rlrb labor	1	42	0.0	0.0	65	3,620
IN	Interior	3029	Preakness (Library Commun	Lobby Main	1	2L4' T8 32w/EL	wrap	2	60	0.1	1L4' T8 28w/ELEE HI/NEW	new wrap	2	33	0.1	0.1	195	3,620
IN	Interior	3030	Preakness (Library Commun	Hall Health Services	1	2L4' T8 32w/EL	wrap	6	60	0.4	1L4' T8 28w/ELEE HI/NEW	new wrap	6	33	0.2	0.2	586	3,620
IN	Interior	3031	Preakness (Library Commun	Closet Clean	1	2L4' T12 EE/EEMAG	old wrap	1	70	0.1	1L4' T8 28w/ELEE HI/NEW	new wrap	1	33	0.0	0.0	19	500
IN	Interior	3032	Preakness (Library Commun	Office Health	1	3L4' T8 32w/EL	trof acr	5	88	0.4	3L4' T8 28w/ELEE LO	rlrb	5	63	0.3	0.1	290	2,320
IN	Interior	3033	Preakness (Library Commun	Office Open Copy	1	2x60W INCANDESCENTS	old drum	1	120	0.1	2L2' T8 15w/ELEE LO/NEW	new wrap	1	24	0.0	0.1	261	2,720
IN	Interior	3034	Preakness (Library Commun	Office 7	1	3L4' T8 32w/EL	trof acr	3	88	0.3	3L4' T8 28w/ELEE LO	rlrb	3	63	0.2	0.1	174	2,320
IN	Interior	3035	Preakness (Library Commun	Office 7	1	1L2' T12 STD/STD	old vanity	1	32	0.0	1L2' T8 15w/ELEE LO/NEW	new vanity	1	14	0.0	0.0	42	2,320
IN	Interior	3036	Preakness (Library Commun	Bath 7	1	60W INCANDESCENT	old square	1	60	0.1	1L2' T8 15w/ELEE LO/NEW	new wrap	1	14	0.0	0.0	153	3,320
IN	Interior	3037	Preakness (Library Commun	Office Open Sub Recruitment Ro	1	3L4' T8 32w/EL	trof acr	19	88	1.7	3L4' T8 28w/ELEE LO	rlrb	19	63	1.2	0.5	1,292	2,720
IN	Interior	3038	Preakness (Library Commun	Bath Sub Recruitment Room 9	1	2L4' T12 EE/EEMAG	old wrap	1	70	0.1	1L4' T8 28w/ELEE HI/NEW	new wrap	1	33	0.0	0.0	123	3,320
IN	Interior	3039	Preakness (Library Commun	Classroom 11	1	3L4' T8 32w/EL	trof acr	11	88	1.0	2L4' T8 28w/ELEE HI/RFL	rlrb RT8 kit	11	64	0.7	0.3	665	2,520
IN	Interior	3040	Preakness (Library Commun	Bath 11	1	60W INCANDESCENT	square surface mt	1	60	0.1	11W COMPACT SI/29708/CF11	screw in	1	11	0.0	0.0	163	3,320
IN	Interior	3041	Preakness (Library Commun	Classroom 13	1	3L4' T8 32w/EL	trof acr	14	88	1.2	2L4' T8 28w/ELEE HI/RFL	rlrb RT8 kit	14	64	0.9	0.3	847	2,520
IN	Interior	3042	Preakness (Library Commun	Classroom 12	1	3L4' T8 32w/EL	trof acr	12	88	1.1	2L4' T8 28w/ELEE HI/RFL	rlrb RT8 kit	12	64	0.8	0.3	726	2,520
IN	Interior	3043	Preakness (Library Commun	Office Open 10	1	3L4' T8 32w/EL	trof acr	8	88	0.7	3L4' T8 28w/ELEE LO	rlrb	8	63	0.5	0.2	544	2,720
IN	Interior	3044	Preakness (Library Commun	Storage Supplies	1	2L4' T8 U/EL	trof acr	2	60	0.1	2L2' T8 15w/ELEE HI/RFL	rlrb rfl	2	33	0.1	0.1	114	2,120
IN	Interior	3045	Preakness (Library Commun	Bath 10	1	2L2' T8 17w/EL	vanity	1	33	0.0	2L2' T8 15w/ELEE LO/NEW	new vanity	1	24	0.0	0.0	30	3,320
IN	Interior	3046	Preakness (Library Commun	Office 10	1	3L4' T8 32w/EL	trof acr	2	88	0.2	3L4' T8 28w/ELEE LO	rlrb	2	63	0.1	0.1	116	2,320
IN	Interior	3047	Preakness (Library Commun	Conference 10	1	3L4' T8 32w/EL	trof acr	2	88	0.2	3L4' T8 28w/ELEE LO	rlrb	2	63	0.1	0.1	116	2,320
IN	Interior	3048	Preakness (Library Commun	Office Locksmith	1	4L4' T8 32w/EL	wrap	2	112	0.2	2L4' T8 28w/ELEE HI/NEW	new wrap wide	2	64	0.1	0.1	223	2,320
IN	Interior	3049	Preakness (Library Commun	Bath Locksmit6H	1	2L2' T12 STD/STD	vanity	1	56	0.1	2L2' T8 15w/ELEE LO/NEW	new vanity	1	24	0.0	0.0	106	3,320
IN	Interior	3050	Preakness (Library Commun	Bath Locksmit6H	1	60W INCANDESCENT	old vanity	1	60	0.1	2L2' T8 15w/ELEE LO/NEW	new vanity	1	24	0.0	0.0	120	3,320
IN	Interior	3051	Preakness (Library Commun	Hall Aud	1	3L4' T8 32w/EL	trof acr	3	88	0.3	3L4' T8 28w/ELEE LO	rlrb	3	63	0.2	0.1	272	3,620
IN	Interior	3052	Preakness (Library Commun	Auditorium	1	400W METAL HALIDE	square recessed	10	455	4.6	138 WATT LED/NEW	new LED RLE7200 box	10	138	1.4	3.2	7,354	2,320
IN	Interior	3053	Preakness (Library Commun	Stage	1	100W INCANDESCENT	jar	3	100	0.3	23W COMPACT SI/29712/CF23	screw in	3	23	0.1	0.2	536	2,320
IN	Interior	3054	Preakness (Library Commun	Storage Stage	1	2L4' T8 32w/EL	wrap	2	60	0.1	1L4' T8 28w/ELEE HI/NEW	new wrap	2	33	0.1	0.1	27	500
IN	Interior	3055	Preakness (Library Commun	Storage Stage	1	2L4' T8 32w/EL	wrap	2	60	0.1	1L4' T8 28w/ELEE HI/NEW	new wrap	2	33	0.1	0.1	27	500
IN	Interior	3056	Preakness (Library Commun	Stair To Basement	s	3L4' T12 EE/EEMAG	trof acr	1	110	0.1	3L4' T8 28w/ELEE LO	rlrb labor	1	63	0.1	0.0	170	3,620
IN	Interior	3057	Preakness (Library Commun	Hall Basement	b	4L4' T8 32w/EL	box acrylic	10	112	1.1	2L4' T8 28w/ELEE HI/RFL	rlrb rfl	10	64	0.6	0.5	1,738	3,620
IN	Interior	3058	Preakness (Library Commun	Office Open Bto	b	4L4' T8 32w/EL	box acrylic	20	112	2.2	2L4' T8 28w/ELEE HI/RFL	rlrb rfl	20	64	1.3	1.0	2,611	2,720
IN	Interior	3059	Preakness (Library Commun	Mechanical Boiler	b	2x13W COMPACT HARDV	old drum	1	30	0.0	NO RETRO	no change needed		30	0.0			500
IN	Interior	3060	Preakness (Library Commun	Mechanical Boiler	b	2x13W COMPACT HARDV	drum	1	30	0.0	NO RETRO	no change needed		30	0.0			500
IN	Interior	3061	Preakness (Library Commun	Mechanical Boiler	b	2L4' T8 32w/EL	old box acrylic	1	60	0.1	1L4' T8 28w/ELEE HI/NEW	new wrap	1	33	0.0	0.0	14	500
IN	Interior	3062	Preakness (Library Commun	Mechanical Boiler	b	2L4' T8 32w/EL	old trof acr	2	60	0.1	2L4' T8 28w/ELEE HI/NEW	new trof acr	2	64	0.1	0.0	-4	500
IN	Interior	3063	Preakness (Library Commun	Office Open Custodian	b	3L4' T8 32w/EL	old trof acr	5	88	0.4	2L4' T8 28w/ELEE HI/NEW	new trof acr	5	64	0.3	0.1	326	2,720
IN	Interior	3064	Preakness (Library Commun	Office 1	b	3L4' T8 32w/EL	trof acr	4	88	0.4	3L4' T8 28w/ELEE LO	rlrb	4	63	0.3	0.1	232	2,320
IN	Interior	3065	Preakness (Library Commun	Office Police	b	3L4' T8 32w/EL	trof acr	12	88	1.1	3L4' T8 28w/ELEE LO	rlrb	12	63	0.8	0.3	696	2,320
IN	Interior	3066	Preakness (Library Commun	Library	1	60W INCANDESCENT	can rec 6"	2	60	0.1	11 WATT LED SI/LED10Par20/D	screw in led	2	11	0.0	0.1	247	2,520
IN	Interior	3067	Preakness (Library Commun	Library	1	3L4' T8 32w/EL	trof acr	71	88	6.2	2L4' T8 28w/ELEE HI/RFL	rlrb RT8 kit	71	64	4.5	1.7	4,294	2,520
IN	Interior	3068	Preakness (Library Commun	Bath Boys	1	60W INCANDESCENT	square surface mt	1	60	0.1	11W COMPACT SI/29708/CF11	screw in	1	11	0.0	0.0	163	3,320
IN	Interior	3069	Preakness (Library Commun	Bath Girls	1	60W INCANDESCENT	square surface mt	1	60	0.1	11W COMPACT SI/29708/CF11	screw in	1	11	0.0	0.0	163	3,320
IN	Interior	3070	Preakness (Library Commun	Hall Library	1	2L4' T8 32w/EL	wrap	7	60	0.4	1L4' T8 28w/ELEE HI/NEW	new wrap	7	33	0.2	0.2	684	3,620
IN	Interior	3071	Preakness (Library Commun	Hall Library	1	2x20 INCANDESCENTS	exit sign	1	40	0.0	3 WATT LED/NEW EXIT BATTE	new exit bat	1	3	0.0	0.0	324	8,760
IN	Interior	3072	Preakness (Library Commun	Conference	1	3L4' T8 32w/EL	trof acr	11	88	1.0	3L4' T8 28w/ELEE LO	rlrb	11	63	0.7	0.3	638	2,320

In or Out	ECM	Line	Building Name	Location	Fl	Pre Fixture Description	Pre Fixture Style	Pre Qty	Pre Watts	Pre kW	Post Fixture Description	Post Fixture Style	Post Qty	Post Watts	Post kW	kW Saved	kWH Saved	Annual Hours
IN	Interior	3073	Preakness (Library Commun	Closet Clean	1	60W INCANDESCENT	square surface mt	1	60	0.1	11W COMPACT SI/29708/CF11	screw in	1	11	0.0	0.0	25	500
IN	Interior	3074	Preakness (Library Commun	Closet Clean	1	3L4' T8 32w/EL	trof acr	1	88	0.1	3L4' T8 28w/ELEE LO	rlrb	1	63	0.1	0.0	13	500
IN	Interior	3075	Preakness (Library Commun	Kitchen Clean	1	1L2' T12 STD/STD	old vanity	1	32	0.0	1L2' T8 15w/ELEE LO/NEW	new vanity	1	14	0.0	0.0	35	1,920
IN	Interior	3076	Preakness (Library Commun	Bath Unisex	1	2L4' T8 32w/EL	wrap	1	60	0.1	1L4' T8 28w/ELEE HI/NEW	new wrap	1	33	0.0	0.0	90	3,320
IN	Interior	3077	Preakness (Library Commun	Bath Unisex	1	1L2' T12 STD/STD	old vanity	1	32	0.0	1L2' T8 15w/ELEE LO/NEW	new vanity	1	14	0.0	0.0	60	3,320
IN	Interior	3078	Preakness (Library Commun	Closet Clean	1	60W INCANDESCENT	square surface mt	1	60	0.1	11W COMPACT SI/29708/CF11	screw in	1	11	0.0	0.0	25	500
IN	Interior	3079	Preakness (Library Commun	Bath Unisex	1	2L4' T8 32w/EL	wrap	1	60	0.1	1L4' T8 28w/ELEE HI/NEW	new wrap	1	33	0.0	0.0	90	3,320
IN	Interior	3080	Preakness (Library Commun	Bath Unisex	1	1L2' T12 STD/STD	old vanity	1	32	0.0	1L2' T8 15w/ELEE LO/NEW	new vanity	1	14	0.0	0.0	60	3,320
IN	Interior	3081	Preakness (Library Commun	Office Open Staff	1	3L4' T8 32w/EL	trof acr	9	88	0.8	3L4' T8 28w/ELEE LO	rlrb	9	63	0.6	0.2	612	2,720
IN	Interior	3082	Preakness (Library Commun	Office Staff	1	3L4' T8 32w/EL	trof acr	3	88	0.3	3L4' T8 28w/ELEE LO	rlrb	3	63	0.2	0.1	174	2,320
IN	Exterior	3083	Preakness (Library Commun	Bldg Mt Fixture 1	ext	60W INCANDESCENT	can rec 6"	4	60	0.2	11 WATT LED SI/LED10Par20/D	screw in led	4	11	0.0	0.2	858	4,380
IN	Exterior	3084	Preakness (Library Commun	Bldg Mt Fixture 2	ext	100W HI PRESSURE SOD	wallpack	3	130	0.4	50 WATT LED/NEW	new LED wallpack	3	50	0.2	0.2	1,051	4,380
IN	Exterior	3085	Preakness (Library Commun	Bldg Mt Fixture 3	ext	100W HI PRESSURE SOD	square surface mt	2	130	0.3	50 WATT LED/NEW	new LED exterior area lig	2	50	0.1	0.2	701	4,380
IN	Exterior	3086	Preakness (Library Commun	Bldg Mt Fixture 4	ext	60W INCANDESCENT	jar	2	60	0.1	23W COMPACT SI/29712/CF23	screw in	2	23	0.0	0.1	324	4,380
IN	Exterior	3087	Preakness (Library Commun	Bldg Mt Fixture 5	ext	250W HI PRESSURE SOD	wallpack	6	295	1.8	133 WATT LED/NEW	new LED wallpack	6	133	0.8	1.0	4,257	4,380
IN	Exterior	3088	Preakness (Library Commun	Bldg Mt Fixture 6	ext	1000W METAL HALIDE	flood	2	1,075	2.2	231 WATT LED/NEW	new LED flood	2	231	0.5	1.7	7,393	4,380
IN	Exterior	3089	Preakness (Library Commun	Bldg Mt Fixture 7	ext	150W HI PRESSURE SOD	area light	1	190	0.2	133 WATT LED/NEW	new LED wallpack	1	133	0.1	0.1	250	4,380
IN	Exterior	3090	Preakness (Library Commun	Bldg Mt Fixture 8	ext	50W HI PRESSURE SODI	wallpack	2	65	0.1	26 WATT LED/NEW	new LED wallpack	2	26	0.1	0.1	342	4,380
IN	Exterior	3091	Preakness (Library Commun	Bldg Mt Fixture 9	ext	23W COMPACT HARDWI	square surface mt	2	24	0.0	NO RETRO	no change needed		24	0.0			4,380
IN	Exterior	3092	Preakness (Library Commun	Parking Lot Fixture 10	ext	400W HI PRESSURE SOD	flood	2	460	0.9	231 WATT LED/NEW	new LED flood	2	231	0.5	0.5	2,006	4,380
IN	Interior	3093	Schuyler-Colfax-Middle Scho	Classroom Portables 1	1	2L4' T12 EE/EEMAG	old wrap	16	70	1.1	1L4' T8 28w/ELEE HI/NEW	new wrap	16	33	0.5	0.6	1,681	2,840
IN	Interior	3094	Schuyler-Colfax-Middle Scho	Classroom Portables 2	1	2L4' T12 EE/EEMAG	old wrap	16	70	1.1	1L4' T8 28w/ELEE HI/NEW	new wrap	16	33	0.5	0.6	1,681	2,840
IN	Interior	3095	Schuyler-Colfax-Middle Scho	Cafeteria Seating Area	1	6L4' T8 32w/EL-8'	trof opaque 1' wid	32	180	5.8	4L4' T8 28w/ELEE HI/NEW-8'	new wrap	32	126	4.0	1.7	5,944	3,440
IN	Interior	3096	Schuyler-Colfax-Middle Scho	Stage	1	2L8' T12 HO STD/EL	strip	6	195	1.2	4L4' T8 28w/ELEE HI/STRIP KIT	rlrb strip kit	6	126	0.8	0.4	1,424	3,440
IN	Interior	3097	Schuyler-Colfax-Middle Scho	Stage	1	60W INCANDESCENT	jar	4	60	0.2	23W COMPACT SI/29712/CF23	screw in	4	23	0.1	0.1	509	3,440
IN	Interior	3098	Schuyler-Colfax-Middle Scho	Kitchen 163 Prep Area	1	4L4' T12 EE/EEMAG-8'	old wrap	11	140	1.5	4L4' T8 28w/ELEE LO/NEW-8'	new wrap	11	83	0.9	0.6	1,781	2,840
IN	Interior	3099	Schuyler-Colfax-Middle Scho	Kitchen 163 Prep Area	1	2L4' T12 EE/EEMAG	old wrap	5	70	0.4	2L4' T8 28w/ELEE LO/NEW	new wrap	5	42	0.2	0.1	398	2,840
IN	Interior	3100	Schuyler-Colfax-Middle Scho	Kitchen Grease Hood	1	60W INCANDESCENT	jar	16	60	1.0	23W COMPACT SI/29712/CF23	screw in	16	23	0.4	0.6	1,681	2,840
IN	Interior	3101	Schuyler-Colfax-Middle Scho	Bath 163 Tr	1	1L4' T12 EE/EEMAG	old vanity	1	40	0.0	1L4' T8 28w/ELEE LO/NEW	new vanity	1	22	0.0	0.0	66	3,640
IN	Interior	3102	Schuyler-Colfax-Middle Scho	Storage 163 As	1	60W INCANDESCENT	keyless	1	60	0.1	2L2' T8 15w/ELEE LO/NEW	new wrap	1	24	0.0	0.0	18	500
IN	Interior	3103	Schuyler-Colfax-Middle Scho	Storage 163 Ds	1	4L4' T12 EE/EEMAG-8'	old wrap	1	140	0.1	2L4' T8 28w/ELEE HI/NEW-8'	new wrap	1	64	0.1	0.1	38	500
IN	Interior	3104	Schuyler-Colfax-Middle Scho	Storage 163Cs	1	4L4' T12 EE/EEMAG-8'	wrap	2	140	0.3	2L4' T8 28w/ELEE HI/NEW-8'	new wrap	2	64	0.1	0.2	76	500
IN	Interior	3105	Schuyler-Colfax-Middle Scho	Mechanical 163 Me	1	60W INCANDESCENT	old jar	1	60	0.1	13 WATT LED/NEW	new LED jar exterior	1	13	0.0	0.0	24	500
IN	Interior	3106	Schuyler-Colfax-Middle Scho	Office 163 Ao	1	2L4' T12 EE/EEMAG	old wrap	1	70	0.1	1L4' T8 28w/ELEE HI/NEW	new wrap	1	33	0.0	0.0	105	2,840
IN	Interior	3107	Schuyler-Colfax-Middle Scho	Cafeteria Seating Area	1	4L4' T12 EE/EEMAG-8'	trof opaque 1' wid	32	140	4.5	4L4' T8 28w/ELEE LO-8'	rlrb labor	32	83	2.7	1.8	6,275	3,440
IN	Interior	3108	Schuyler-Colfax-Middle Scho	Cafeteria Seating Area	1	2L4' T12 EE/EEMAG	trof opaque 1' wid	16	70	1.1	2L4' T8 28w/ELEE LO	rlrb labor	16	42	0.7	0.4	1,541	3,440
IN	Interior	3109	Schuyler-Colfax-Middle Scho	Cafeteria Seating Area	1	4L4' T8 32w/EL	old wrap	12	112	1.3	4L4' T8 28w/ELEE/NEW	new wrap	12	94	1.1	0.2	743	3,440
IN	Interior	3110	Schuyler-Colfax-Middle Scho	Office 162 Sc	1	2L8' T12 EE/EEMAG	strip reflector	1	123	0.1	4L4' T8 28w/ELEE LO/STRIP KI	rlrb strip kit	1	83	0.1	0.0	114	2,840
IN	Interior	3111	Schuyler-Colfax-Middle Scho	Office 162 Sc	1	4L4' T12 EE/EEMAG	wrap	2	140	0.3	2L4' T8 28w/ELEE HI/NEW	new wrap wide	2	64	0.1	0.2	432	2,840
IN	Interior	3112	Schuyler-Colfax-Middle Scho	Office 162 Sc	1	4L4' T12 EE/EEMAG	wrap	1	140	0.1	2L4' T8 28w/ELEE HI/NEW	new wrap wide	1	64	0.1	0.1	216	2,840
IN	Interior	3113	Schuyler-Colfax-Middle Scho	Storage 162 Sc	1	4L4' T12 EE/EEMAG	wrap	2	140	0.3	2L4' T8 28w/ELEE HI/NEW	new wrap wide	2	64	0.1	0.2	371	2,440
IN	Interior	3114	Schuyler-Colfax-Middle Scho	Classroom 164	1	2L4' T8 32w/EL	trof acr	1	60	0.1	2L4' T8 28w/ELEE HI/RFL	rlrb RT8 kit	1	64	0.1	0.0	-11	2,840
IN	Interior	3115	Schuyler-Colfax-Middle Scho	Classroom 164	1	4L4' T12 EE/EEMAG	trof acr	10	140	1.4	2L4' T8 28w/ELEE HI/RFL	rlrb RT8 kit	10	64	0.6	0.8	2,158	2,840
IN	Interior	3116	Schuyler-Colfax-Middle Scho	Classroom 164	1	4L4' T8 32w/EL	trof acr	10	112	1.1	2L4' T8 28w/ELEE HI/RFL	rlrb RT8 kit	10	64	0.6	0.5	1,363	2,840
IN	Interior	3117	Schuyler-Colfax-Middle Scho	Classroom 164	1	3L4' T12 EE/EEMAG	trof opaque 1' wid	8	110	0.9	2L4' T8 28w/ELEE HI/RFL	rlrb RT8 kit	8	64	0.5	0.4	1,045	2,840
IN	Interior	3118	Schuyler-Colfax-Middle Scho	Office 164Ao	1	3L4' T8 32w/EL	trof acr	4	88	0.4	3L4' T8 28w/ELEE LO	rlrb	4	63	0.3	0.1	284	2,840
IN	Interior	3119	Schuyler-Colfax-Middle Scho	Storage Instruments	1	1L4' T12 EE/EEMAG	old wrap narrow	2	40	0.1	1L4' T8 28w/ELEE HI/NEW	new wrap	2	33	0.1	0.0	34	2,440
IN	Interior	3120	Schuyler-Colfax-Middle Scho	Storage Instruments	1	2L4' T8 32w/EL	old wrap	1	60	0.1	1L4' T8 28w/ELEE HI/NEW	new wrap	1	33	0.0	0.0	66	2,440

In or Out	ECM	Line	Building Name	Location	Fl	Pre Fixture Description	Pre Fixture Style	Pre Qty	Pre Watts	Pre kW	Post Fixture Description	Post Fixture Style	Post Qty	Post Watts	Post kW	kW Saved	kWH Saved	Annual Hours
IN	Interior	3121	Schuyler-Colfax-Middle Scho	Hall By Practice Rooms	1	2L4' T8 U/EL	trof acr	2	60	0.1	2L2' T8 15w/ELEE HI/RFL	rlrb rfl	2	33	0.1	0.1	197	3,640
IN	Interior	3122	Schuyler-Colfax-Middle Scho	Hall By Practice Rooms	1	4L4' T8 32w/EL	trof acr	1	112	0.1	2L4' T8 28w/ELEE HI/RFL	rlrb rfl	1	64	0.1	0.0	175	3,640
IN	Interior	3123	Schuyler-Colfax-Middle Scho	Hall By Practice Rooms	1	2L4' T8 U/EL	trof acr	1	60	0.1	2L2' T8 15w/ELEE HI/RFL	rlrb rfl	1	33	0.0	0.0	98	3,640
IN	Interior	3124	Schuyler-Colfax-Middle Scho	Storage 1	1	2L4' T8 U/EL	trof acr	1	60	0.1	2L2' T8 15w/ELEE HI/RFL	rlrb rfl	1	33	0.0	0.0	14	500
IN	Interior	3125	Schuyler-Colfax-Middle Scho	Storage 2	1	2L4' T8 U/EL	trof acr	1	60	0.1	2L2' T8 15w/ELEE HI/RFL	rlrb rfl	1	33	0.0	0.0	14	500
IN	Interior	3126	Schuyler-Colfax-Middle Scho	Storage 3	1	2L4' T8 U/EL	trof acr	1	60	0.1	2L2' T8 15w/ELEE HI/RFL	rlrb rfl	1	33	0.0	0.0	14	500
IN	Interior	3127	Schuyler-Colfax-Middle Scho	Bath Staff	1	2L4' T8 32w/EL	wrap	1	60	0.1	1L4' T8 28w/ELEE HI/NEW	new wrap	1	33	0.0	0.0	98	3,640
IN	Interior	3128	Schuyler-Colfax-Middle Scho	Bath Staff	1	3L4' T8 32w/EL	trof acr	1	88	0.1	3L4' T8 28w/ELEE LO	rlrb	1	63	0.1	0.0	91	3,640
IN	Interior	3129	Schuyler-Colfax-Middle Scho	Bath Staff	1	32W CIRCLELINE HARDW	square surface mt	1	34	0.0	2L2' T8 15w/ELEE LO/NEW	new wrap	1	24	0.0	0.0	36	3,640
IN	Interior	3130	Schuyler-Colfax-Middle Scho	Bath Staff	1	3L4' T8 32w/EL	trof acr	2	88	0.2	3L4' T8 28w/ELEE LO	rlrb	2	63	0.1	0.1	182	3,640
IN	Interior	3131	Schuyler-Colfax-Middle Scho	Bath Staff	1	4L4' T8 32w/EL-8'	vanity	1	112	0.1	2L4' T8 28w/ELEE HI/NEW-8'	new vanity	1	64	0.1	0.0	175	3,640
IN	Interior	3132	Schuyler-Colfax-Middle Scho	Bath 148 Bt	1	32W CIRCLELINE HARDW	square surface mt	1	34	0.0	2L2' T8 15w/ELEE LO/NEW	new wrap	1	24	0.0	0.0	36	3,640
IN	Interior	3133	Schuyler-Colfax-Middle Scho	Bath 148 Bt	1	32W CIRCLELINE HARDW	drum	2	34	0.1	2L2' T8 15w/ELEE LO/NEW	new wrap	2	24	0.0	0.0	73	3,640
IN	Interior	3134	Schuyler-Colfax-Middle Scho	Bath 148 Bt	1	3L4' T8 32w/EL	box acrylic	1	88	0.1	3L4' T8 28w/ELEE LO	rlrb	1	63	0.1	0.0	91	3,640
IN	Interior	3135	Schuyler-Colfax-Middle Scho	Bath 148 Bt	1	4L4' T8 32w/EL-8'	vanity	1	112	0.1	2L4' T8 28w/ELEE HI/NEW-8'	new vanity	1	64	0.1	0.0	175	3,640
IN	Interior	3136	Schuyler-Colfax-Middle Scho	Closet Clean	1	23W COMPACT HARDWI	old jar	2	24	0.0	NO RETRO	no change needed		24	0.0			500
IN	Interior	3137	Schuyler-Colfax-Middle Scho	Classroom 101 Science	1	2L4' T8 32w/EL	trof acr	13	60	0.8	2L4' T8 28w/ELEE HI/RFL	rlrb RT8 kit	13	64	0.8	-0.1	-148	2,840
IN	Interior	3138	Schuyler-Colfax-Middle Scho	Classroom 101 Science	1	2L4' T8 U/EL	trof acr	2	60	0.1	2L2' T8 15w/ELEE HI/RFL	rlrb RT8 kit	2	33	0.1	0.1	153	2,840
IN	Interior	3139	Schuyler-Colfax-Middle Scho	Storage 101 Ao	1	2L4' T8 32w/EL	trof acr 1' wide	2	60	0.1	2L4' T8 28w/ELEE LO	rlrb	2	42	0.1	0.0	88	2,440
IN	Interior	3140	Schuyler-Colfax-Middle Scho	Storage 101 As	1	60W INCANDESCENT	old jar	1	60	0.1	13 WATT LED/NEW	new LED jar exterior	1	13	0.0	0.0	24	500
IN	Interior	3141	Schuyler-Colfax-Middle Scho	Storage Beakers	1	3L4' T8 32w/EL	trof parabolic	2	88	0.2	2L4' T8 28w/ELEE HI/RFL	rlrb rfl	2	64	0.1	0.0	117	2,440
IN	Interior	3142	Schuyler-Colfax-Middle Scho	Classroom 102	1	2L4' T8 32w/EL	trof acr	14	60	0.8	2L4' T8 28w/ELEE HI/RFL	rlrb RT8 kit	14	64	0.9	-0.1	-159	2,840
IN	Interior	3143	Schuyler-Colfax-Middle Scho	Classroom 102	1	2L4' T8 U/EL	trof acr	2	60	0.1	2L2' T8 15w/ELEE HI/RFL	rlrb RT8 kit	2	33	0.1	0.1	153	2,840
IN	Interior	3144	Schuyler-Colfax-Middle Scho	Storage 102 Sc	1	3L4' T8 32w/EL	trof acr	1	88	0.1	3L4' T8 28w/ELEE LO	rlrb	1	63	0.1	0.0	13	500
IN	Interior	3145	Schuyler-Colfax-Middle Scho	Classroom 104	1	4L4' T12 EE/EEMAG-8'	old wrap	8	140	1.1	2L4' T8 28w/ELEE HI/NEW-8'	new wrap	8	64	0.5	0.6	1,727	2,840
IN	Interior	3146	Schuyler-Colfax-Middle Scho	Classroom 104	1	2L4' T12 EE/EEMAG	old wrap	1	70	0.1	1L4' T8 28w/ELEE HI/NEW	new wrap	1	33	0.0	0.0	105	2,840
IN	Interior	3147	Schuyler-Colfax-Middle Scho	Classroom 104	1	2L4' T12 EE/EEMAG-8'	old wrap	1	70	0.1	2L4' T8 28w/ELEE HI/NEW-8'	new wrap	1	64	0.1	0.0	17	2,840
IN	Interior	3148	Schuyler-Colfax-Middle Scho	Classroom 104	1	1L4' T12 EE/EEMAG	old wrap	1	40	0.0	1L4' T8 28w/ELEE HI/NEW	new wrap	1	33	0.0	0.0	20	2,840
IN	Interior	3149	Schuyler-Colfax-Middle Scho	Office Middle	1	1L4' T12 EE/EEMAG	old vanity	4	40	0.2	1L4' T8 28w/ELEE LO/NEW	new vanity	4	22	0.1	0.1	204	2,840
IN	Interior	3150	Schuyler-Colfax-Middle Scho	Office Middle	1	1L2' T12 STD/STD	old vanity	1	32	0.0	1L2' T8 15w/ELEE LO/NEW	new vanity	1	14	0.0	0.0	51	2,840
IN	Interior	3151	Schuyler-Colfax-Middle Scho	Classroom 107	1	4L4' T12 EE/EEMAG-8'	old wrap	8	140	1.1	2L4' T8 28w/ELEE HI/NEW-8'	new wrap	8	64	0.5	0.6	1,727	2,840
IN	Interior	3152	Schuyler-Colfax-Middle Scho	Classroom 107	1	2L4' T12 EE/EEMAG	old wrap	1	70	0.1	1L4' T8 28w/ELEE HI/NEW	new wrap	1	33	0.0	0.0	105	2,840
IN	Interior	3153	Schuyler-Colfax-Middle Scho	Classroom 107	1	2L4' T12 EE/EEMAG-8'	old wrap	2	70	0.1	2L4' T8 28w/ELEE HI/NEW-8'	new wrap	2	64	0.1	0.0	34	2,840
IN	Interior	3154	Schuyler-Colfax-Middle Scho	Classroom 106	1	4L4' T12 EE/EEMAG-8'	old wrap	8	140	1.1	2L4' T8 28w/ELEE HI/NEW-8'	new wrap	8	64	0.5	0.6	1,727	2,840
IN	Interior	3155	Schuyler-Colfax-Middle Scho	Classroom 106	1	2L4' T12 EE/EEMAG	old wrap	1	70	0.1	1L4' T8 28w/ELEE HI/NEW	new wrap	1	33	0.0	0.0	105	2,840
IN	Interior	3156	Schuyler-Colfax-Middle Scho	Classroom 106	1	2L4' T12 EE/EEMAG-8'	old wrap	1	70	0.1	2L4' T8 28w/ELEE HI/NEW-8'	new wrap	1	64	0.1	0.0	17	2,840
IN	Interior	3157	Schuyler-Colfax-Middle Scho	Classroom 106	1	1L4' T12 EE/EEMAG	old wrap	1	40	0.0	1L4' T8 28w/ELEE HI/NEW	new wrap	1	33	0.0	0.0	20	2,840
IN	Interior	3158	Schuyler-Colfax-Middle Scho	Classroom 105	1	4L4' T12 EE/EEMAG-8'	old wrap	8	140	1.1	2L4' T8 28w/ELEE HI/NEW-8'	new wrap	8	64	0.5	0.6	1,727	2,840
IN	Interior	3159	Schuyler-Colfax-Middle Scho	Classroom 105	1	2L4' T12 EE/EEMAG	old wrap	1	70	0.1	1L4' T8 28w/ELEE HI/NEW	new wrap	1	33	0.0	0.0	105	2,840
IN	Interior	3160	Schuyler-Colfax-Middle Scho	Classroom 105	1	2L4' T12 EE/EEMAG-8'	old wrap	1	70	0.1	2L4' T8 28w/ELEE HI/NEW-8'	new wrap	1	64	0.1	0.0	17	2,840
IN	Interior	3161	Schuyler-Colfax-Middle Scho	Classroom 105	1	1L4' T12 EE/EEMAG	old wrap	1	40	0.0	1L4' T8 28w/ELEE HI/NEW	new wrap	1	33	0.0	0.0	20	2,840
IN	Interior	3162	Schuyler-Colfax-Middle Scho	Classroom 103	1	4L4' T12 EE/EEMAG-8'	old wrap	9	140	1.3	2L4' T8 28w/ELEE HI/NEW-8'	new wrap	9	64	0.6	0.7	1,943	2,840
IN	Interior	3163	Schuyler-Colfax-Middle Scho	Classroom 103	1	2L4' T12 EE/EEMAG-8'	old wrap	3	70	0.2	1L4' T8 28w/ELEE HI/NEW	new wrap	3	33	0.1	0.1	315	2,840
IN	Interior	3164	Schuyler-Colfax-Middle Scho	Classroom 109	1	6L4' T8 32w/EL-8'	indirect	6	180	1.1	6L4' T8 28w/ELEE LO-8'	rlrb	6	126	0.8	0.3	920	2,840
IN	Interior	3165	Schuyler-Colfax-Middle Scho	Classroom 109	1	6L4' T8 32w/EL-8'	indirect	6	180	1.1	6L4' T8 28w/ELEE LO-8'	rlrb	6	126	0.8	0.3	920	2,840
IN	Interior	3166	Schuyler-Colfax-Middle Scho	Classroom 108	1	4L4' T12 EE/EEMAG-8'	old wrap	9	140	1.3	2L4' T8 28w/ELEE HI/NEW-8'	new wrap	9	64	0.6	0.7	1,943	2,840
IN	Interior	3167	Schuyler-Colfax-Middle Scho	Classroom 108	1	2L4' T12 EE/EEMAG-8'	old wrap	3	70	0.2	2L4' T8 28w/ELEE HI/NEW-8'	new wrap	3	64	0.2	0.0	51	2,840
IN	Interior	3168	Schuyler-Colfax-Middle Scho	Classroom 110	1	4L4' T12 EE/EEMAG-8'	old wrap	8	140	1.1	2L4' T8 28w/ELEE HI/NEW-8'	new wrap	8	64	0.5	0.6	1,727	2,840

In or Out	ECM	Line	Building Name	Location	Fl	Pre Fixture Description	Pre Fixture Style	Pre Qty	Pre Watts	Pre kW	Post Fixture Description	Post Fixture Style	Post Qty	Post Watts	Post kW	kW Saved	kWH Saved	Annual Hours
IN	Interior	3169	Schuyler-Colfax-Middle Scho	Classroom 110	1	2L4' T12 EE/EEMAG	old wrap	1	70	0.1	1L4' T8 28w/ELEE HI/NEW	new wrap	1	33	0.0	0.0	105	2,840
IN	Interior	3170	Schuyler-Colfax-Middle Scho	Classroom 110	1	2L4' T12 EE/EEMAG-8'	old wrap	2	70	0.1	2L4' T8 28w/ELEE HI/NEW-8'	new wrap	2	64	0.1	0.0	34	2,840
IN	Interior	3171	Schuyler-Colfax-Middle Scho	Office Middle	1	2L4' T8 32w/EL-8'	old vanity	4	60	0.2	2L4' T8 28w/ELEE LO/NEW-8'	new wrap	4	42	0.2	0.1	204	2,840
IN	Interior	3172	Schuyler-Colfax-Middle Scho	Office Middle	1	2L2' T8 17w/EL	old vanity	1	33	0.0	2L2' T8 15w/ELEE LO/NEW	new vanity	1	24	0.0	0.0	26	2,840
IN	Interior	3173	Schuyler-Colfax-Middle Scho	Classroom 111	1	4L4' T12 EE/EEMAG-8'	old wrap	8	140	1.1	2L4' T8 28w/ELEE HI/NEW-8'	new wrap	8	64	0.5	0.6	1,727	2,840
IN	Interior	3174	Schuyler-Colfax-Middle Scho	Classroom 111	1	2L4' T12 EE/EEMAG	old wrap	1	70	0.1	1L4' T8 28w/ELEE HI/NEW	new wrap	1	33	0.0	0.0	105	2,840
IN	Interior	3175	Schuyler-Colfax-Middle Scho	Classroom 111	1	2L4' T12 EE/EEMAG-8'	old wrap	2	70	0.1	2L4' T8 28w/ELEE HI/NEW-8'	new wrap	2	64	0.1	0.0	34	2,840
IN	Interior	3176	Schuyler-Colfax-Middle Scho	Classroom 112	1	4L4' T12 EE/EEMAG-8'	old wrap	8	140	1.1	2L4' T8 28w/ELEE HI/NEW-8'	new wrap	8	64	0.5	0.6	1,727	2,840
IN	Interior	3177	Schuyler-Colfax-Middle Scho	Classroom 112	1	2L4' T12 EE/EEMAG	old wrap	1	70	0.1	1L4' T8 28w/ELEE HI/NEW	new wrap	1	33	0.0	0.0	105	2,840
IN	Interior	3178	Schuyler-Colfax-Middle Scho	Classroom 112	1	2L4' T12 EE/EEMAG-8'	old wrap	1	70	0.1	2L4' T8 28w/ELEE HI/NEW-8'	new wrap	1	64	0.1	0.0	17	2,840
IN	Interior	3179	Schuyler-Colfax-Middle Scho	Classroom 112	1	1L4' T12 EE/EEMAG	old wrap	1	40	0.0	1L4' T8 28w/ELEE HI/NEW	new wrap	1	33	0.0	0.0	20	2,840
IN	Interior	3180	Schuyler-Colfax-Middle Scho	Classroom 113	1	4L4' T12 EE/EEMAG-8'	old wrap	8	140	1.1	2L4' T8 28w/ELEE HI/NEW-8'	new wrap	8	64	0.5	0.6	1,727	2,840
IN	Interior	3181	Schuyler-Colfax-Middle Scho	Classroom 113	1	2L4' T12 EE/EEMAG	old wrap	1	70	0.1	1L4' T8 28w/ELEE HI/NEW	new wrap	1	33	0.0	0.0	105	2,840
IN	Interior	3182	Schuyler-Colfax-Middle Scho	Classroom 113	1	2L4' T12 EE/EEMAG-8'	old wrap	1	70	0.1	2L4' T8 28w/ELEE HI/NEW-8'	new wrap	1	64	0.1	0.0	17	2,840
IN	Interior	3183	Schuyler-Colfax-Middle Scho	Classroom 113	1	1L4' T12 EE/EEMAG	old wrap	1	40	0.0	1L4' T8 28w/ELEE HI/NEW	new wrap	1	33	0.0	0.0	20	2,840
IN	Interior	3184	Schuyler-Colfax-Middle Scho	Classroom 114	1	6L4' T8 32w/EL-8'	indirect	6	180	1.1	6L4' T8 28w/ELEE LO-8'	rlrb	6	126	0.8	0.3	920	2,840
IN	Interior	3185	Schuyler-Colfax-Middle Scho	Classroom 115	1	4L4' T12 EE/EEMAG-8'	old wrap	9	140	1.3	2L4' T8 28w/ELEE HI/NEW-8'	new wrap	9	64	0.6	0.7	1,943	2,840
IN	Interior	3186	Schuyler-Colfax-Middle Scho	Classroom 115	1	2L4' T12 EE/EEMAG-8'	old wrap	2	70	0.1	2L4' T8 28w/ELEE HI/NEW-8'	new wrap	2	64	0.1	0.0	34	2,840
IN	Interior	3187	Schuyler-Colfax-Middle Scho	Classroom 115	1	1L4' T12 EE/EEMAG	old wrap	1	40	0.0	1L4' T8 28w/ELEE HI/NEW	new wrap	1	33	0.0	0.0	20	2,840
IN	Interior	3188	Schuyler-Colfax-Middle Scho	Classroom 116	1	4L4' T12 EE/EEMAG-8'	old wrap	8	140	1.1	2L4' T8 28w/ELEE HI/NEW-8'	new wrap	8	64	0.5	0.6	1,727	2,840
IN	Interior	3189	Schuyler-Colfax-Middle Scho	Classroom 116	1	2L4' T12 EE/EEMAG	old wrap	1	70	0.1	1L4' T8 28w/ELEE HI/NEW	new wrap	1	33	0.0	0.0	105	2,840
IN	Interior	3190	Schuyler-Colfax-Middle Scho	Classroom 116	1	2L4' T12 EE/EEMAG-8'	old wrap	1	70	0.1	2L4' T8 28w/ELEE HI/NEW-8'	new wrap	1	64	0.1	0.0	17	2,840
IN	Interior	3191	Schuyler-Colfax-Middle Scho	Classroom 116	1	1L4' T12 EE/EEMAG	old wrap	1	40	0.0	1L4' T8 28w/ELEE HI/NEW	new wrap	1	33	0.0	0.0	20	2,840
IN	Interior	3192	Schuyler-Colfax-Middle Scho	Office Middle	1	2L4' T8 32w/EL-8'	old vanity	4	60	0.2	2L4' T8 28w/ELEE LO/NEW-8'	new wrap	4	42	0.2	0.1	204	2,840
IN	Interior	3193	Schuyler-Colfax-Middle Scho	Office Middle	1	2L2' T8 17w/EL	old vanity	1	33	0.0	2L2' T8 15w/ELEE LO/NEW	new vanity	1	24	0.0	0.0	26	2,840
IN	Interior	3194	Schuyler-Colfax-Middle Scho	Classroom 117	1	4L4' T12 EE/EEMAG-8'	old wrap	8	140	1.1	2L4' T8 28w/ELEE HI/NEW-8'	new wrap	8	64	0.5	0.6	1,727	2,840
IN	Interior	3195	Schuyler-Colfax-Middle Scho	Classroom 117	1	2L4' T12 EE/EEMAG	old wrap	1	70	0.1	1L4' T8 28w/ELEE HI/NEW	new wrap	1	33	0.0	0.0	105	2,840
IN	Interior	3196	Schuyler-Colfax-Middle Scho	Classroom 117	1	2L4' T12 EE/EEMAG-8'	old wrap	1	70	0.1	2L4' T8 28w/ELEE HI/NEW-8'	new wrap	1	64	0.1	0.0	17	2,840
IN	Interior	3197	Schuyler-Colfax-Middle Scho	Classroom 117	1	1L4' T12 EE/EEMAG	old wrap	1	40	0.0	1L4' T8 28w/ELEE HI/NEW	new wrap	1	33	0.0	0.0	20	2,840
IN	Interior	3198	Schuyler-Colfax-Middle Scho	Classroom 118	1	4L4' T12 EE/EEMAG-8'	old wrap	8	140	1.1	2L4' T8 28w/ELEE HI/NEW-8'	new wrap	8	64	0.5	0.6	1,727	2,840
IN	Interior	3199	Schuyler-Colfax-Middle Scho	Classroom 118	1	2L4' T12 EE/EEMAG	old wrap	1	70	0.1	1L4' T8 28w/ELEE HI/NEW	new wrap	1	33	0.0	0.0	105	2,840
IN	Interior	3200	Schuyler-Colfax-Middle Scho	Classroom 118	1	2L4' T12 EE/EEMAG-8'	old wrap	2	70	0.1	2L4' T8 28w/ELEE HI/NEW-8'	new wrap	2	64	0.1	0.0	34	2,840
IN	Interior	3201	Schuyler-Colfax-Middle Scho	Classroom 119	1	4L4' T12 EE/EEMAG-8'	old wrap	8	140	1.1	2L4' T8 28w/ELEE HI/NEW-8'	new wrap	8	64	0.5	0.6	1,727	2,840
IN	Interior	3202	Schuyler-Colfax-Middle Scho	Classroom 119	1	2L4' T12 EE/EEMAG	old wrap	1	70	0.1	1L4' T8 28w/ELEE HI/NEW	new wrap	1	33	0.0	0.0	105	2,840
IN	Interior	3203	Schuyler-Colfax-Middle Scho	Classroom 119	1	2L4' T12 EE/EEMAG-8'	old wrap	2	70	0.1	2L4' T8 28w/ELEE HI/NEW-8'	new wrap	2	64	0.1	0.0	34	2,840
IN	Interior	3204	Schuyler-Colfax-Middle Scho	Classroom 121	1	6L4' T12 EE/EEMAG-8'	old wrap	9	210	1.9	4L4' T8 28w/ELEE/NEW-8'	new wrap	9	94	0.8	1.0	2,965	2,840
IN	Interior	3205	Schuyler-Colfax-Middle Scho	Classroom 121	1	1L4' T8 32w/EL	old wrap	3	30	0.1	1L4' T8 28w/ELEE HI/NEW	new wrap	3	33	0.1	0.0	-26	2,840
IN	Interior	3206	Schuyler-Colfax-Middle Scho	Classroom 122	1	6L4' T12 EE/EEMAG-8'	old wrap	9	210	1.9	4L4' T8 28w/ELEE/NEW-8'	new wrap	9	94	0.8	1.0	2,965	2,840
IN	Interior	3207	Schuyler-Colfax-Middle Scho	Classroom 122	1	1L4' T8 32w/EL	old wrap	3	30	0.1	1L4' T8 28w/ELEE HI/NEW	new wrap	3	33	0.1	0.0	-26	2,840
IN	Interior	3208	Schuyler-Colfax-Middle Scho	Classroom 123	1	4L4' T12 EE/EEMAG-8'	old wrap	9	140	1.3	4L4' T8 28w/ELEE/NEW-8'	new wrap	9	94	0.8	0.4	1,176	2,840
IN	Interior	3209	Schuyler-Colfax-Middle Scho	Classroom 123	1	1L4' T8 32w/EL	old wrap	3	30	0.1	1L4' T8 28w/ELEE HI/NEW	new wrap	3	33	0.1	0.0	-26	2,840
IN	Interior	3210	Schuyler-Colfax-Middle Scho	Classroom 124	1	4L4' T12 EE/EEMAG-8'	old wrap	8	140	1.1	2L4' T8 28w/ELEE HI/NEW-8'	new wrap	8	64	0.5	0.6	1,727	2,840
IN	Interior	3211	Schuyler-Colfax-Middle Scho	Classroom 124	1	2L4' T12 EE/EEMAG	old wrap	2	70	0.1	1L4' T8 28w/ELEE HI/NEW	new wrap	2	33	0.1	0.1	210	2,840
IN	Interior	3212	Schuyler-Colfax-Middle Scho	Classroom 124	1	4L4' T8 32w/EL-8'	old vanity	1	112	0.1	2L4' T8 28w/ELEE HI/NEW-8'	new vanity	1	64	0.1	0.0	136	2,840
IN	Interior	3213	Schuyler-Colfax-Middle Scho	Office 124	1	4L4' T12 EE/EEMAG-8'	old wrap	1	140	0.1	2L4' T8 28w/ELEE HI/NEW-8'	new wrap	1	64	0.1	0.1	216	2,840
IN	Interior	3214	Schuyler-Colfax-Middle Scho	Office 124	1	2L4' T12 EE/EEMAG	old wrap	1	70	0.1	1L4' T8 28w/ELEE HI/NEW	new wrap	1	33	0.0	0.0	105	2,840
IN	Interior	3215	Schuyler-Colfax-Middle Scho	Office 124	1	2L4' T8 32w/EL-8'	old vanity	1	60	0.1	2L4' T8 28w/ELEE LO/NEW-8'	new wrap	1	42	0.0	0.0	51	2,840
IN	Interior	3216	Schuyler-Colfax-Middle Scho	Office 124	1	1L4' T8 32w/EL	old vanity	1	30	0.0	1L4' T8 28w/ELEE LO/NEW	new vanity	1	22	0.0	0.0	23	2,840

In or Out	ECM	Line	Building Name	Location	Fl	Pre Fixture Description	Pre Fixture Style	Pre Qty	Pre Watts	Pre kW	Post Fixture Description	Post Fixture Style	Post Qty	Post Watts	Post kW	kW Saved	kWH Saved	Annual Hours
IN	Interior	3217	Schuyler-Colfax-Middle Scho	Classroom 120	1	4L4' T12 EE/EEMAG-8'	old wrap	9	140	1.3	2L4' T8 28w/ELEE HI/NEW-8'	new wrap	9	64	0.6	0.7	1,943	2,840
IN	Interior	3218	Schuyler-Colfax-Middle Scho	Classroom 120	1	2L4' T8 32w/EL-8'	old wrap	3	60	0.2	2L4' T8 28w/ELEE HI/NEW-8'	new wrap	3	64	0.2	0.0	-34	2,840
IN	Interior	3219	Schuyler-Colfax-Middle Scho	Hall D	1	2L4' T12 EE/EEMAG	old trof acr 1' wide	12	70	0.8	2L4' T8 28w/ELEE/NEW	new trof acr 1x4	12	48	0.6	0.3	961	3,640
IN	Interior	3220	Schuyler-Colfax-Middle Scho	Hall D	1	1L4' T12 EE/EEMAG	old vanity	1	40	0.0	1L4' T8 28w/ELEE LO/NEW	new vanity	1	22	0.0	0.0	66	3,640
IN	Interior	3221	Schuyler-Colfax-Middle Scho	Hall C	1	2L4' T12 EE/EEMAG	old trof acr 1' wide	12	70	0.8	2L4' T8 28w/ELEE/NEW	new trof acr 1x4	12	48	0.6	0.3	961	3,640
IN	Interior	3222	Schuyler-Colfax-Middle Scho	Hall C	1	1L4' T12 EE/EEMAG	old vanity	1	40	0.0	1L4' T8 28w/ELEE LO/NEW	new vanity	1	22	0.0	0.0	66	3,640
IN	Interior	3223	Schuyler-Colfax-Middle Scho	Hall B	1	4L4' T8 32w/EL	trof acr	9	112	1.0	2L4' T8 28w/ELEE HI/RFL	rlrb rfl	9	64	0.6	0.4	1,572	3,640
IN	Interior	3224	Schuyler-Colfax-Middle Scho	Hall B	1	2L4' T12 EE/EEMAG	old wrap	1	70	0.1	1L4' T8 28w/ELEE HI/NEW	new wrap	1	33	0.0	0.0	135	3,640
IN	Interior	3225	Schuyler-Colfax-Middle Scho	Hall B	1	1L4' T12 EE/EEMAG	old vanity	1	40	0.0	1L4' T8 28w/ELEE LO/NEW	new vanity	1	22	0.0	0.0	66	3,640
IN	Interior	3226	Schuyler-Colfax-Middle Scho	Hall 102 To 101	1	2L4' T12 EE/EEMAG	old wrap	1	70	0.1	1L4' T8 28w/ELEE HI/NEW	new wrap	1	33	0.0	0.0	135	3,640
IN	Interior	3227	Schuyler-Colfax-Middle Scho	Hall 102 To 101	1	3L4' T8 32w/EL	trof acr	9	88	0.8	3L4' T8 28w/ELEE LO	rlrb	9	63	0.6	0.2	819	3,640
IN	Interior	3228	Schuyler-Colfax-Middle Scho	Gym Main	1	400W METAL HALIDE	square recessed	46	455	20.9	138 WATT LED/NEW	new LED RLE7200 box	46	138	6.3	14.6	50,162	3,440
IN	Interior	3229	Schuyler-Colfax-Middle Scho	Gym Main	1	4L4' T12 EE/EEMAG	old wrap	7	140	1.0	REMOVE FIXTURE	not needed	7			1.0	3,371	3,440
IN	Interior	3230	Schuyler-Colfax-Middle Scho	Storage 126 Sc	1	4L4' T8 32w/EL	box acrylic	2	112	0.2	2L4' T8 28w/ELEE HI/RFL	rlrb rfl	2	64	0.1	0.1	48	500
IN	Interior	3231	Schuyler-Colfax-Middle Scho	Storage Ping Pong Tables	1	4L4' T8 32w/EL	box acrylic	2	112	0.2	2L4' T8 28w/ELEE HI/RFL	rlrb rfl	2	64	0.1	0.1	234	2,440
IN	Interior	3232	Schuyler-Colfax-Middle Scho	Storage 126 Sc	1	2L4' T12 EE/EEMAG	old wrap	1	70	0.1	1L4' T8 28w/ELEE HI/NEW	new wrap	1	33	0.0	0.0	19	500
IN	Interior	3233	Schuyler-Colfax-Middle Scho	Hall Gym	1	2L4' T8 32w/EL	old trof acr 1' wide	9	60	0.5	2L4' T8 28w/ELEE/NEW	new trof acr 1x4	9	48	0.4	0.1	393	3,640
IN	Interior	3234	Schuyler-Colfax-Middle Scho	Hall Gym	1	4L4' T12 EE/EEMAG	trof opaque	8	140	1.1	2L4' T8 28w/ELEE HI/NEW	new trof acr	8	64	0.5	0.6	2,213	3,640
IN	Interior	3235	Schuyler-Colfax-Middle Scho	Gym 128 Aux	1	4L4' T12 EE/EEMAG	old wrap	24	140	3.4	2L4' T8 28w/ELEE HI/NEW	new wrap wide	24	64	1.5	1.8	6,275	3,440
IN	Interior	3236	Schuyler-Colfax-Middle Scho	Gym 129 Aux	1	4L4' T12 EE/EEMAG	old wrap	24	140	3.4	2L4' T8 28w/ELEE HI/NEW	new wrap wide	24	64	1.5	1.8	6,275	3,440
IN	Interior	3237	Schuyler-Colfax-Middle Scho	Storage 129 As	1	2L4' T8 32w/EL	wrap	1	60	0.1	1L4' T8 28w/ELEE HI/NEW	new wrap	1	33	0.0	0.0	14	500
IN	Interior	3238	Schuyler-Colfax-Middle Scho	Hall 130 Girls Locker	1	60W INCANDESCENT	square recessed	1	60	0.1	11W COMPACT SI/29708/CF11	screw in	1	11	0.0	0.0	178	3,640
IN	Interior	3239	Schuyler-Colfax-Middle Scho	Closet Clean	1	60W INCANDESCENT	keyless	1	60	0.1	23W COMPACT SI/29712/CF23	screw in	1	23	0.0	0.0	19	500
IN	Interior	3240	Schuyler-Colfax-Middle Scho	Locker 130 Girls	1	3L2' T8 17w/EL	trof acr	2	47	0.1	3L2' T8 15w/ELEE LO	rlrb	2	39	0.1	0.0	58	3,640
IN	Interior	3241	Schuyler-Colfax-Middle Scho	Locker 130 Girls	1	3L4' T8 32w/EL	trof acr	8	88	0.7	3L4' T8 28w/ELEE LO	rlrb	8	63	0.5	0.2	728	3,640
IN	Interior	3242	Schuyler-Colfax-Middle Scho	Locker Toilet Area	1	2L2' T12 STD/STD	old wrap	2	56	0.1	2L2' T8 15w/ELEE LO/NEW	new wrap	2	24	0.0	0.1	233	3,640
IN	Interior	3243	Schuyler-Colfax-Middle Scho	Locker Toilet Area	1	2L4' T8 32w/EL	vanity	3	60	0.2	2L4' T8 28w/ELEE LO/NEW	new vanity	3	42	0.1	0.1	197	3,640
IN	Interior	3244	Schuyler-Colfax-Middle Scho	Office Coach	1	2L4' T8 U/EL	trof acr	2	60	0.1	2L2' T8 15w/ELEE HI/RFL	rlrb rfl	2	33	0.1	0.1	153	2,840
IN	Interior	3245	Schuyler-Colfax-Middle Scho	Bath Coach	1	3x13W COMPACT HARDW	drum	1	45	0.0	NO RETRO	no change needed		45	0.0			3,640
IN	Interior	3246	Schuyler-Colfax-Middle Scho	Hall By 131 In Girls Locker	1	2x13W COMPACT HARDW	square surface mt	1	30	0.0	NO RETRO	no change needed		30	0.0			3,640
IN	Interior	3247	Schuyler-Colfax-Middle Scho	Office Open 131	1	8L4' T12 EE/EEMAG	decorative	10	280	2.8	8L4' T8 28w/ELEE LO	rlrb	10	166	1.7	1.1	3,922	3,440
IN	Interior	3248	Schuyler-Colfax-Middle Scho	Storage 131 Co	1	2L4' T8 32w/EL	wrap	1	60	0.1	1L4' T8 28w/ELEE HI/NEW	new wrap	1	33	0.0	0.0	66	2,440
IN	Interior	3249	Schuyler-Colfax-Middle Scho	Conference 131 Co	1	8L4' T12 EE/EEMAG	decorative	1	280	0.3	8L4' T8 28w/ELEE LO	rlrb	1	166	0.2	0.1	324	2,840
IN	Interior	3250	Schuyler-Colfax-Middle Scho	Storage 131 Go	1	60W INCANDESCENT	keyless	1	60	0.1	23W COMPACT SI/29712/CF23	screw in	1	23	0.0	0.0	19	500
IN	Interior	3251	Schuyler-Colfax-Middle Scho	Classroom 132	1	8L4' T12 EE/EEMAG	decorative	8	280	2.2	8L4' T8 28w/ELEE LO	rlrb	8	166	1.3	0.9	2,590	2,840
IN	Interior	3252	Schuyler-Colfax-Middle Scho	Storage 128Bs	1	3x13W COMPACT HARDW	drum	1	45	0.0	NO RETRO	no change needed		45	0.0			500
IN	Interior	3253	Schuyler-Colfax-Middle Scho	Storage 128As	1	60W INCANDESCENT	old jar	1	60	0.1	13 WATT LED/NEW	new LED jar exterior	1	13	0.0	0.0	24	500
IN	Interior	3254	Schuyler-Colfax-Middle Scho	Classroom 133	1	8L4' T12 EE/EEMAG	decorative	8	280	2.2	8L4' T8 28w/ELEE LO	rlrb	8	166	1.3	0.9	2,590	2,840
IN	Interior	3255	Schuyler-Colfax-Middle Scho	Bath 136 Gt	1	32W CIRCLELINE HARDW	square surface mt	1	34	0.0	2L2' T8 15w/ELEE LO/NEW	new wrap	1	24	0.0	0.0	36	3,640
IN	Interior	3256	Schuyler-Colfax-Middle Scho	Bath 136 Gt	1	1L4' T12 EE/EEMAG	old vanity	1	40	0.0	1L4' T8 28w/ELEE LO/NEW	new vanity	1	22	0.0	0.0	66	3,640
IN	Interior	3257	Schuyler-Colfax-Middle Scho	Bath 136 Gt	1	3L4' T8 32w/EL	trof acr	1	88	0.1	3L4' T8 28w/ELEE LO	rlrb	1	63	0.1	0.0	91	3,640
IN	Interior	3258	Schuyler-Colfax-Middle Scho	Bath 136 Bt	1	32W CIRCLELINE HARDW	square surface mt	1	34	0.0	2L2' T8 15w/ELEE LO/NEW	new wrap	1	24	0.0	0.0	36	3,640
IN	Interior	3259	Schuyler-Colfax-Middle Scho	Bath 136 Bt	1	2L4' T8 32w/EL	box acrylic	2	60	0.1	2L4' T8 28w/ELEE LO/NEW	new wrap wide	2	42	0.1	0.0	131	3,640
IN	Interior	3260	Schuyler-Colfax-Middle Scho	Closet Clean	1	23W COMPACT HARDWIR	keyless	1	24	0.0	NO RETRO	no change needed		24	0.0			500
IN	Interior	3261	Schuyler-Colfax-Middle Scho	Bath 125 Bt	1	2L4' T8 32w/EL	trof acr 1' wide	1	60	0.1	2L4' T8 28w/ELEE LO	rlrb	1	42	0.0	0.0	66	3,640
IN	Interior	3262	Schuyler-Colfax-Middle Scho	Bath 125 Bt	1	4L4' T12 EE/EEMAG	trof acr	2	140	0.3	2L4' T8 28w/ELEE HI/RFL	rlrb rfl	2	64	0.1	0.2	553	3,640
IN	Interior	3263	Schuyler-Colfax-Middle Scho	Closet Clean	1	2L4' T8 32w/EL	vanity	1	60	0.1	2L4' T8 28w/ELEE LO/NEW	new vanity	1	42	0.0	0.0	9	500
IN	Interior	3264	Schuyler-Colfax-Middle Scho	Bath 125 Bt	1	2L4' T8 32w/EL	trof acr 1' wide	1	60	0.1	2L4' T8 28w/ELEE LO	rlrb	1	42	0.0	0.0	66	3,640

In or Out	ECM	Line	Building Name	Location	Fl	Pre Fixture Description	Pre Fixture Style	Pre Qty	Pre Watts	Pre kW	Post Fixture Description	Post Fixture Style	Post Qty	Post Watts	Post kW	kW Saved	kWH Saved	Annual Hours
IN	Interior	3265	Schuyler-Colfax-Middle Scho	Bath 125 Bt	1	2L4' T12 EE/EEMAG	wrap	1	70	0.1	1L4' T8 28w/ELEE HI/NEW	new wrap	1	33	0.0	0.0	135	3,640
IN	Interior	3266	Schuyler-Colfax-Middle Scho	Bath 125 Bt	1	2L4' T8 32w/EL	wrap	1	60	0.1	1L4' T8 28w/ELEE HI/NEW	new wrap	1	33	0.0	0.0	98	3,640
IN	Interior	3267	Schuyler-Colfax-Middle Scho	Bath 125 Bt	1	2L2' T8 17w/EL	vanity	1	33	0.0	2L2' T8 15w/ELEE LO/NEW	new vanity	1	24	0.0	0.0	33	3,640
IN	Interior	3268	Schuyler-Colfax-Middle Scho	Locker 127 Boys	1	3L2' T8 17w/EL	trof acr	1	47	0.0	3L2' T8 15w/ELEE LO	rlrb	1	39	0.0	0.0	29	3,640
IN	Interior	3269	Schuyler-Colfax-Middle Scho	Locker 127 Boys	1	3L4' T8 32w/EL	trof acr	9	88	0.8	3L4' T8 28w/ELEE LO	rlrb	9	63	0.6	0.2	819	3,640
IN	Interior	3270	Schuyler-Colfax-Middle Scho	Locker 127 Boys	1	100W INCANDESCENT	square surface mt	6	100	0.6	23W COMPACT SI/29712/CF23	screw in	6	23	0.1	0.5	46	100
IN	Interior	3271	Schuyler-Colfax-Middle Scho	Office 127 Ao	1	3L4' T8 32w/EL	old wrap	2	88	0.2	2L4' T8 28w/ELEE HI/NEW	new wrap wide	2	64	0.1	0.0	136	2,840
IN	Interior	3272	Schuyler-Colfax-Middle Scho	Bath B	1	60W INCANDESCENT	square recessed	1	60	0.1	11W COMPACT SI/29708/CF11	screw in	1	11	0.0	0.0	178	3,640
IN	Interior	3273	Schuyler-Colfax-Middle Scho	Closet Clean	1	60W INCANDESCENT	keyless	1	60	0.1	23W COMPACT SI/29712/CF23	screw in	1	23	0.0	0.0	19	500
IN	Interior	3274	Schuyler-Colfax-Middle Scho	Storage 127 Sc	1	3L4' T8 32w/EL	trof acr	4	88	0.4	3L4' T8 28w/ELEE LO	rlrb	4	63	0.3	0.1	50	500
IN	Interior	3275	Schuyler-Colfax-Middle Scho	Bath 127 Boys	1	2L4' T12 EE/EEMAG	old wrap	2	70	0.1	1L4' T8 28w/ELEE HI/NEW	new wrap	2	33	0.1	0.1	269	3,640
IN	Interior	3276	Schuyler-Colfax-Middle Scho	Bath 127 Boys	1	2L2' T8 17w/EL	old vanity	1	33	0.0	2L2' T8 15w/ELEE LO/NEW	new vanity	1	24	0.0	0.0	33	3,640
IN	Interior	3277	Schuyler-Colfax-Middle Scho	Hall Door 6 To Door 1	1	3L4' T8 32w/EL	trof acr	35	88	3.1	3L4' T8 28w/ELEE LO	rlrb	35	63	2.2	0.9	3,185	3,640
IN	Interior	3278	Schuyler-Colfax-Middle Scho	Office Open Main	1	3L4' T8 32w/EL	box acrylic	10	88	0.9	3L4' T8 28w/ELEE LO	rlrb	10	63	0.6	0.3	860	3,440
IN	Interior	3279	Schuyler-Colfax-Middle Scho	Office Open Main	1	3L4' T8 32w/EL	trof parabolic	10	88	0.9	2L4' T8 28w/ELEE HI/RFL	rlrb rfl	10	64	0.6	0.2	826	3,440
IN	Interior	3280	Schuyler-Colfax-Middle Scho	Office Open Main	1	1L4' T12 EE/EEMAG	valance	1	40	0.0	1L4' T8 28w/ELEE LO	rlrb	1	22	0.0	0.0	62	3,440
IN	Interior	3281	Schuyler-Colfax-Middle Scho	Office Nurse	1	3L4' T8 32w/EL	trof para dbl switc	1	88	0.1	3L4' T8 28w/ELEE LO (1L&2L BA	rlrb dbl switched	1	64	0.1	0.0	68	2,840
IN	Interior	3282	Schuyler-Colfax-Middle Scho	Office 137 Fo	1	3L4' T8 32w/EL	trof para dbl switc	1	88	0.1	3L4' T8 28w/ELEE LO (1L&2L BA	rlrb dbl switched	1	64	0.1	0.0	68	2,840
IN	Interior	3283	Schuyler-Colfax-Middle Scho	Office 137 Eo	1	4L4' T8 32w/EL	trof para dbl switc	2	112	0.2	4L4' T8 28w/ELEE LO (2Lx2 BAL	rlrb dbl switched	2	84	0.2	0.1	159	2,840
IN	Interior	3284	Schuyler-Colfax-Middle Scho	Office Open Nurse	1	4L4' T8 32w/EL	trof para dbl switc	2	112	0.2	4L4' T8 28w/ELEE LO (2Lx2 BAL	rlrb dbl switched	2	84	0.2	0.1	193	3,440
IN	Interior	3285	Schuyler-Colfax-Middle Scho	Office Open Nurse	1	2L4' T8 32w/EL	wrap	1	60	0.1	1L4' T8 28w/ELEE HI/NEW	new wrap	1	33	0.0	0.0	93	3,440
IN	Interior	3286	Schuyler-Colfax-Middle Scho	Bath Nurse	1	1L4' T8 32w/EL	trof acr 1' wide	1	30	0.0	1L4' T8 28w/ELEE LO	rlrb	1	22	0.0	0.0	29	3,640
IN	Interior	3287	Schuyler-Colfax-Middle Scho	Closet Med Supplies	1	1L4' T8 32w/EL	trof acr 1' wide	1	30	0.0	1L4' T8 28w/ELEE LO	rlrb	1	22	0.0	0.0	4	500
IN	Interior	3288	Schuyler-Colfax-Middle Scho	Office Med Supplies	1	3L4' T8 32w/EL	trof para dbl switc	2	88	0.2	3L4' T8 28w/ELEE LO (1L&2L BA	rlrb dbl switched	2	64	0.1	0.0	136	2,840
IN	Interior	3289	Schuyler-Colfax-Middle Scho	Office Open Exam	1	4L4' T8 32w/EL	trof para dbl switc	2	112	0.2	4L4' T8 28w/ELEE LO (2Lx2 BAL	rlrb dbl switched	2	84	0.2	0.1	193	3,440
IN	Interior	3290	Schuyler-Colfax-Middle Scho	Hall Book Shelf	1	2L4' T12 EE/EEMAG-8'	old strip	1	70	0.1	2L4' T8 28w/ELEE LO/STRIP KI	rlrb strip kit	1	42	0.0	0.0	102	3,640
IN	Interior	3291	Schuyler-Colfax-Middle Scho	Conference 137 Ho	1	1L4' T12 EE/EEMAG	trof acr 1' wide	1	40	0.0	1L4' T8 28w/ELEE LO	rlrb	1	22	0.0	0.0	51	2,840
IN	Interior	3292	Schuyler-Colfax-Middle Scho	Office Asst. Principal	1	4L4' T8 32w/EL	trof para dbl switc	2	112	0.2	4L4' T8 28w/ELEE LO (2Lx2 BAL	rlrb dbl switched	2	84	0.2	0.1	159	2,840
IN	Interior	3293	Schuyler-Colfax-Middle Scho	Office Principal	1	3L4' T8 32w/EL	trof para dbl switc	4	88	0.4	3L4' T8 28w/ELEE LO (1L&2L BA	rlrb dbl switched	4	64	0.3	0.1	273	2,840
IN	Interior	3294	Schuyler-Colfax-Middle Scho	Conference 137 Bo	1	3L4' T8 32w/EL	trof para dbl switc	2	88	0.2	3L4' T8 28w/ELEE LO (1L&2L BA	rlrb dbl switched	2	64	0.1	0.0	136	2,840
IN	Interior	3295	Schuyler-Colfax-Middle Scho	Storage 137 Ao	1	4L4' T8 32w/EL	trof para dbl switc	2	112	0.2	4L4' T8 28w/ELEE LO (2Lx2 BAL	rlrb dbl switched	2	84	0.2	0.1	137	2,440
IN	Interior	3296	Schuyler-Colfax-Middle Scho	Lounge 138 Staff	1	4L4' T12 EE/EEMAG	old wrap	2	140	0.3	2L4' T8 28w/ELEE HI/NEW	new wrap wide	2	64	0.1	0.2	383	2,520
IN	Interior	3297	Schuyler-Colfax-Middle Scho	Kitchen 138 Staff	1	4L4' T12 EE/EEMAG	trof acr	2	140	0.3	4L4' T8 28w/ELEE LO	rlrb	2	83	0.2	0.1	324	2,840
IN	Interior	3298	Schuyler-Colfax-Middle Scho	Hall 148Bt To 150Sc	1	3L4' T8 32w/EL	trof acr	9	88	0.8	3L4' T8 28w/ELEE LO	rlrb	9	63	0.6	0.2	819	3,640
IN	Interior	3299	Schuyler-Colfax-Middle Scho	Hall Boys Locker To Girls Locker	1	3L4' T8 32w/EL	trof acr	9	88	0.8	3L4' T8 28w/ELEE LO	rlrb	9	63	0.6	0.2	819	3,640
IN	Interior	3300	Schuyler-Colfax-Middle Scho	Library 139 Ao	1	4L4' T12 EE/EEMAG	trof acr	4	140	0.6	2L4' T8 28w/ELEE HI/RFL	rlrb RT8 kit	4	64	0.3	0.3	863	2,840
IN	Interior	3301	Schuyler-Colfax-Middle Scho	Library 139 Bo	1	4L4' T12 EE/EEMAG	trof acr	6	140	0.8	2L4' T8 28w/ELEE HI/RFL	rlrb RT8 kit	6	64	0.4	0.5	1,295	2,840
IN	Interior	3302	Schuyler-Colfax-Middle Scho	Library	1	4L2' T12 STD/STD	trof acr	3	112	0.3	2L2' T8 15w/ELEE HI/RFL	rlrb RT8 kit	3	33	0.1	0.2	673	2,840
IN	Interior	3303	Schuyler-Colfax-Middle Scho	Library	1	4L4' T12 EE/EEMAG	trof acr	56	140	7.8	2L4' T8 28w/ELEE HI/RFL	rlrb RT8 kit	56	64	3.6	4.3	12,087	2,840
IN	Interior	3304	Schuyler-Colfax-Middle Scho	Library	1	4L4' T12 EE/EEMAG-8'	valance	6	140	0.8	4L4' T8 28w/ELEE LO-8'	rlrb	6	83	0.5	0.3	971	2,840
IN	Interior	3305	Schuyler-Colfax-Middle Scho	Library	1	2L4' T12 EE/EEMAG	valance	1	70	0.1	2L4' T8 28w/ELEE LO	rlrb	1	42	0.0	0.0	80	2,840
IN	Interior	3306	Schuyler-Colfax-Middle Scho	Office 139 Co	1	4L4' T12 EE/EEMAG	trof acr	4	140	0.6	2L4' T8 28w/ELEE HI/RFL	rlrb rfl	4	64	0.3	0.3	863	2,840
IN	Interior	3307	Schuyler-Colfax-Middle Scho	Office Open 139 Sb	1	4L4' T12 EE/EEMAG	trof acr	6	140	0.8	2L4' T8 28w/ELEE HI/RFL	rlrb rfl	6	64	0.4	0.5	1,569	3,440
IN	Interior	3308	Schuyler-Colfax-Middle Scho	Office 139 Sa	1	4L4' T12 EE/EEMAG	trof acr	4	140	0.6	2L4' T8 28w/ELEE HI/RFL	rlrb rfl	4	64	0.3	0.3	863	2,840
IN	Interior	3309	Schuyler-Colfax-Middle Scho	Storage 150 Sc	1	2L4' T12 EE/EEMAG	old wrap	4	70	0.3	1L4' T8 28w/ELEE HI/NEW	new wrap	4	33	0.1	0.1	74	500
IN	Interior	3310	Schuyler-Colfax-Middle Scho	Classroom 152Sgi	1	4L4' T12 EE/EEMAG-8'	old wrap	5	140	0.7	2L4' T8 28w/ELEE HI/NEW-8'	new wrap	5	64	0.3	0.4	1,079	2,840
IN	Interior	3311	Schuyler-Colfax-Middle Scho	Classroom 152Sgi	1	2L4' T8 32w/EL	old wrap	1	60	0.1	1L4' T8 28w/ELEE HI/NEW	new wrap	1	33	0.0	0.0	77	2,840
IN	Interior	3312	Schuyler-Colfax-Middle Scho	Classroom 153Sgi	1	4L4' T12 EE/EEMAG-8'	old wrap	5	140	0.7	2L4' T8 28w/ELEE HI/NEW-8'	new wrap	5	64	0.3	0.4	1,079	2,840

In or Out	ECM	Line	Building Name	Location	Fl	Pre Fixture Description	Pre Fixture Style	Pre Qty	Pre Watts	Pre kW	Post Fixture Description	Post Fixture Style	Post Qty	Post Watts	Post kW	kW Saved	kWH Saved	Annual Hours
IN	Interior	3313	Schuyler-Colfax-Middle Scho	Classroom 153Sgi	1	2L4' T8 32w/EL	old wrap	1	60	0.1	1L4' T8 28w/ELEE HI/NEW	new wrap	1	33	0.0	0.0	77	2,840
IN	Interior	3314	Schuyler-Colfax-Middle Scho	Classroom 154Sgi	1	4L4' T12 EE/EEMAG-8'	old wrap	6	140	0.8	2L4' T8 28w/ELEE HI/NEW-8'	new wrap	6	64	0.4	0.5	1,295	2,840
IN	Interior	3315	Schuyler-Colfax-Middle Scho	Office Open 161 Ma	1	4L4' T8 32w/EL	wrap	2	112	0.2	2L4' T8 28w/ELEE/NEW	new wrap	2	48	0.1	0.1	440	3,440
IN	Interior	3316	Schuyler-Colfax-Middle Scho	Office Open 161 Ma	1	1L2' T12 STD/STD	old wrap	4	32	0.1	1L2' T8 15w/ELEE LO/NEW	new wrap	4	14	0.1	0.1	248	3,440
IN	Interior	3317	Schuyler-Colfax-Middle Scho	Office Open 161 Ma	1	60W INCANDESCENT	keyless	1	60	0.1	23W COMPACT SI/29712/CF23	screw in	1	23	0.0	0.0	127	3,440
IN	Interior	3318	Schuyler-Colfax-Middle Scho	Mechanical Electrical	1	2L4' T8 32w/EL	wrap	1	60	0.1	1L4' T8 28w/ELEE HI/NEW	new wrap	1	33	0.0	0.0	14	500
IN	Interior	3319	Schuyler-Colfax-Middle Scho	Closet Clean	1	42W COMPACT HARDWI	keyless	1	44	0.0	NO RETRO	no change needed		44	0.0			500
IN	Interior	3320	Schuyler-Colfax-Middle Scho	Mechanical Boiler	1	4L4' T8 32w/EL-8'	strip reflector	6	112	0.7	4L4' T8 28w/ELEE LO-8'	rlrb	6	83	0.5	0.2	87	500
IN	Interior	3321	Schuyler-Colfax-Middle Scho	Mechanical Boiler	1	2L4' T8 32w/EL	old wrap	1	60	0.1	1L4' T8 28w/ELEE HI/NEW	new wrap	1	33	0.0	0.0	14	500
IN	Interior	3322	Schuyler-Colfax-Middle Scho	Classroom 160	1	3L4' T8 32w/EL	trof para dbl switc	19	88	1.7	2L4' T8 28w/ELEE HI/RFL	rlrb RT8 kit	19	64	1.2	0.5	1,295	2,840
IN	Interior	3323	Schuyler-Colfax-Middle Scho	Storage 159 Pr	1	2L4' T12 EE/EEMAG	old wrap	3	70	0.2	1L4' T8 28w/ELEE HI/NEW	new wrap	3	33	0.1	0.1	271	2,440
IN	Interior	3324	Schuyler-Colfax-Middle Scho	Classroom 159	1	3L4' T8 32w/EL	trof para dbl switc	19	88	1.7	2L4' T8 28w/ELEE HI/RFL	rlrb RT8 kit	19	64	1.2	0.5	1,295	2,840
IN	Interior	3325	Schuyler-Colfax-Middle Scho	Classroom 158	1	4L4' T12 EE/EEMAG-8'	old wrap	11	140	1.5	2L4' T8 28w/ELEE HI/NEW-8'	new wrap	11	64	0.7	0.8	2,374	2,840
IN	Interior	3326	Schuyler-Colfax-Middle Scho	Office Middle	1	4L4' T12 EE/EEMAG-8'	old wrap	4	140	0.6	2L4' T8 28w/ELEE HI/NEW-8'	new wrap	4	64	0.3	0.3	863	2,840
IN	Interior	3327	Schuyler-Colfax-Middle Scho	Office Middle	1	1L2' T8 17w/EL	vanity	1	17	0.0	2L2' T8 15w/ELEE LO/NEW	new vanity	1	24	0.0	0.0	-20	2,840
IN	Interior	3328	Schuyler-Colfax-Middle Scho	Classroom 155	1	4L4' T12 EE/EEMAG-8'	old wrap	11	140	1.5	2L4' T8 28w/ELEE HI/NEW-8'	new wrap	11	64	0.7	0.8	2,374	2,840
IN	Interior	3329	Schuyler-Colfax-Middle Scho	Classroom 156	1	4L4' T12 EE/EEMAG-8'	old wrap	11	140	1.5	2L4' T8 28w/ELEE HI/NEW-8'	new wrap	11	64	0.7	0.8	2,374	2,840
IN	Interior	3330	Schuyler-Colfax-Middle Scho	Classroom 157	1	4L4' T12 EE/EEMAG-8'	old wrap	11	140	1.5	2L4' T8 28w/ELEE HI/NEW-8'	new wrap	11	64	0.7	0.8	2,374	2,840
IN	Interior	3331	Schuyler-Colfax-Middle Scho	Storage 157	1	2x60W INCANDESCENTS	square recessed	2	120	0.2	11W COMPACT SI/29708/CF11	screw in	4	11	0.0	0.2	98	500
IN	Interior	3332	Schuyler-Colfax-Middle Scho	Classroom 143	1	4L4' T12 EE/EEMAG-8'	old wrap	11	140	1.5	2L4' T8 28w/ELEE HI/NEW-8'	new wrap	11	64	0.7	0.8	2,374	2,840
IN	Interior	3333	Schuyler-Colfax-Middle Scho	Office Middle	1	4L4' T12 EE/EEMAG-8'	old wrap	4	140	0.6	2L4' T8 28w/ELEE HI/NEW-8'	new wrap	4	64	0.3	0.3	863	2,840
IN	Interior	3334	Schuyler-Colfax-Middle Scho	Office Middle	1	1L2' T8 17w/EL	vanity	1	17	0.0	2L2' T8 15w/ELEE LO/NEW	new vanity	1	24	0.0	0.0	-20	2,840
IN	Interior	3335	Schuyler-Colfax-Middle Scho	Classroom 144	1	4L4' T12 EE/EEMAG-8'	old wrap	11	140	1.5	2L4' T8 28w/ELEE HI/NEW-8'	new wrap	11	64	0.7	0.8	2,374	2,840
IN	Interior	3336	Schuyler-Colfax-Middle Scho	Classroom 141	1	4L4' T12 EE/EEMAG-8'	old wrap	11	140	1.5	2L4' T8 28w/ELEE HI/NEW-8'	new wrap	11	64	0.7	0.8	2,374	2,840
IN	Interior	3337	Schuyler-Colfax-Middle Scho	Classroom 142	1	4L4' T12 EE/EEMAG-8'	old wrap	11	140	1.5	2L4' T8 28w/ELEE HI/NEW-8'	new wrap	11	64	0.7	0.8	2,374	2,840
IN	Interior	3338	Schuyler-Colfax-Middle Scho	Storage Middle	1	2x60W INCANDESCENTS	square recessed	2	120	0.2	11W COMPACT SI/29708/CF11	screw in	4	11	0.0	0.2	98	500
IN	Interior	3339	Schuyler-Colfax-Middle Scho	Hall Middle	1	2x60W INCANDESCENTS	square recessed	2	120	0.2	11W COMPACT SI/29708/CF11	screw in	4	11	0.0	0.2	713	3,640
IN	Interior	3340	Schuyler-Colfax-Middle Scho	Classroom 145	1	6L4' T12 EE/EEMAG-8'	old wrap	12	210	2.5	4L4' T8 28w/ELEE/NEW-8'	new wrap	12	94	1.1	1.4	3,953	2,840
IN	Interior	3341	Schuyler-Colfax-Middle Scho	Classroom 145	1	2L4' T12 EE/EEMAG	old wrap	3	70	0.2	2L4' T8 28w/ELEE/NEW	new wrap	3	48	0.1	0.1	187	2,840
IN	Interior	3342	Schuyler-Colfax-Middle Scho	Storage 145 Ao	1	3L4' T12 EE/EEMAG	wrap	2	110	0.2	2L4' T8 28w/ELEE/NEW	new wrap	2	48	0.1	0.1	303	2,440
IN	Interior	3343	Schuyler-Colfax-Middle Scho	Classroom 140	1	6L4' T12 EE/EEMAG-8'	old wrap	9	210	1.9	4L4' T8 28w/ELEE/NEW-8'	new wrap	9	94	0.8	1.0	2,965	2,840
IN	Interior	3344	Schuyler-Colfax-Middle Scho	Classroom 140	1	3L4' T12 EE/EEMAG	wrap	4	110	0.4	2L4' T8 28w/ELEE/NEW	new wrap	4	48	0.2	0.2	704	2,840
IN	Interior	3345	Schuyler-Colfax-Middle Scho	Classroom 136 Wood	1	6L4' T12 EE/EEMAG-8'	old wrap	20	210	4.2	4L4' T8 28w/ELEE/NEW-8'	new wrap	20	94	1.9	2.3	6,589	2,840
IN	Interior	3346	Schuyler-Colfax-Middle Scho	Classroom 136 Wood	1	3L4' T12 EE/EEMAG	old wrap	4	110	0.4	2L4' T8 28w/ELEE/NEW	new wrap	4	48	0.2	0.2	704	2,840
IN	Interior	3347	Schuyler-Colfax-Middle Scho	Storage Varnish	1	150W INCANDESCENT	explosion	1	150	0.2	23W COMPACT SI/29712/CF23	screw in	1	23	0.0	0.1	64	500
IN	Interior	3348	Schuyler-Colfax-Middle Scho	Storage Varnish	1	4L4' T12 EE/EEMAG	trof acr	1	140	0.1	2L4' T8 28w/ELEE HI/RFL	rlrb rfl	1	64	0.1	0.1	38	500
IN	Interior	3349	Schuyler-Colfax-Middle Scho	Office Wood Shop	1	2L4' T8 U/EL	trof acr	2	60	0.1	2L2' T8 15w/ELEE HI/RFL	rlrb rfl	2	33	0.1	0.1	153	2,840
IN	Interior	3350	Schuyler-Colfax-Middle Scho	Storage Wood Shop	1	4L4' T12 EE/EEMAG	trof acr	1	140	0.1	2L4' T8 28w/ELEE HI/RFL	rlrb rfl	1	64	0.1	0.1	38	500
IN	Interior	3351	Schuyler-Colfax-Middle Scho	Classroom 135	1	6L4' T12 EE/EEMAG-8'	old wrap	14	210	2.9	4L4' T8 28w/ELEE/NEW-8'	new wrap	14	94	1.3	1.6	4,612	2,840
IN	Interior	3352	Schuyler-Colfax-Middle Scho	Classroom 135	1	3L4' T12 EE/EEMAG	old wrap	3	110	0.3	2L4' T8 28w/ELEE/NEW	new wrap	3	48	0.1	0.2	528	2,840
IN	Interior	3353	Schuyler-Colfax-Middle Scho	Classroom 135	1	3L4' T12 EE/EEMAG	old wrap	2	110	0.2	2L4' T8 28w/ELEE/NEW	new wrap	2	48	0.1	0.1	352	2,840
IN	Interior	3354	Schuyler-Colfax-Middle Scho	Storage 135 As	1	3L4' T12 EE/EEMAG	old wrap	1	110	0.1	2L4' T8 28w/ELEE/NEW	new wrap	1	48	0.0	0.1	31	500
IN	Interior	3355	Schuyler-Colfax-Middle Scho	Storage 135 Bs	1	3L4' T12 EE/EEMAG	old wrap	1	110	0.1	2L4' T8 28w/ELEE/NEW	new wrap	1	48	0.0	0.1	31	500
IN	Interior	3356	Schuyler-Colfax-Middle Scho	Classroom 134	1	6L4' T8 32w/EL-8'	indirect	12	180	2.2	4L4' T8 28w/ELEE/NEW-8'	new wrap	12	94	1.1	1.0	2,931	2,840
IN	Interior	3357	Schuyler-Colfax-Middle Scho	Classroom 134	1	3L4' T8 32w/EL	indirect	3	88	0.3	3L4' T8 28w/ELEE LO	rlrb	3	63	0.2	0.1	213	2,840
IN	Interior	3358	Schuyler-Colfax-Middle Scho	Hall 130 To 136	1	3L4' T8 32w/EL	trof opaque 1' wid	22	88	1.9	3L4' T8 28w/ELEE LO	rlrb	22	63	1.4	0.6	2,002	3,640
IN	Interior	3359	Schuyler-Colfax-Middle Scho	Hall 140 To 145	1	3L4' T8 32w/EL	trof opaque 1' wid	7	88	0.6	3L4' T8 28w/ELEE LO	rlrb	7	63	0.4	0.2	637	3,640
IN	Interior	3360	Schuyler-Colfax-Middle Scho	Hall 143 To 146Gt	1	3L4' T8 32w/EL	trof acr	10	88	0.9	3L4' T8 28w/ELEE LO	rlrb	10	63	0.6	0.3	910	3,640

In or Out	ECM	Line	Building Name	Location	Fl	Pre Fixture Description	Pre Fixture Style	Pre Qty	Pre Watts	Pre kW	Post Fixture Description	Post Fixture Style	Post Qty	Post Watts	Post kW	kW Saved	kWH Saved	Annual Hours
IN	Interior	3361	Schuyler-Colfax-Middle Scho	Hall 143 To 146Gt	1	3L2' T8 17w/EL	trof acr	1	47	0.0	3L2' T8 15w/ELEE LO	rlrb	1	39	0.0	0.0	29	3,640
IN	Interior	3362	Schuyler-Colfax-Middle Scho	Hall 146Gt To 157	1	3L4' T8 32w/EL	trof acr	6	88	0.5	3L4' T8 28w/ELEE LO	rlrb	6	63	0.4	0.2	546	3,640
IN	Interior	3363	Schuyler-Colfax-Middle Scho	Hall 146Gt To 157	1	3L2' T12 STD/STD	trof opaque	9	78	0.7	3L2' T8 15w/ELEE LO	rlrb	9	39	0.4	0.4	1,278	3,640
IN	Interior	3364	Schuyler-Colfax-Middle Scho	Hall 146Gt To 157	1	3L4' T8 32w/EL	trof opaque 1' wid	9	88	0.8	3L4' T8 28w/ELEE LO	rlrb	9	63	0.6	0.2	819	3,640
IN	Interior	3365	Schuyler-Colfax-Middle Scho	Classroom 151	1	4L4' T12 EE/EEMAG-8'	wrap	6	140	0.8	2L4' T8 28w/ELEE HI/NEW-8'	new wrap	6	64	0.4	0.5	1,295	2,840
IN	Interior	3366	Schuyler-Colfax-Middle Scho	Bath 146Bt	1	2L4' T8 32w/EL-8'	old wrap narrow	4	60	0.2	2L4' T8 28w/ELEE LO/NEW-8'	new wrap	4	42	0.2	0.1	262	3,640
IN	Interior	3367	Schuyler-Colfax-Middle Scho	Bath 146Gt	1	4L4' T8 32w/EL	trof acr	4	112	0.4	2L4' T8 28w/ELEE HI/RFL	rlrb rfl	4	64	0.3	0.2	699	3,640
IN	Interior	3368	Schuyler-Colfax-Middle Scho	Bath 146Gt	1	2L2' T8 17w/EL	vanity	4	33	0.1	2L2' T8 15w/ELEE LO/NEW	new vanity	4	24	0.1	0.0	131	3,640
IN	Exterior	3369	Schuyler-Colfax-Middle Scho	Bldg Mt Fixture 1	ext	250W HI PRESSURE SOD	wallpack	3	295	0.9	133 WATT LED/NEW	new LED wallpack	3	133	0.4	0.5	2,129	4,380
IN	Exterior	3370	Schuyler-Colfax-Middle Scho	Bldg Mt Fixture 2	ext	50W HI PRESSURE SODI	wallpack	1	65	0.1	26 WATT LED/NEW	new LED wallpack	1	26	0.0	0.0	171	4,380
IN	Exterior	3371	Schuyler-Colfax-Middle Scho	Bldg Mt Fixture 3	ext	50W HI PRESSURE SODI	square surface mt	13	65	0.8	26 WATT LED/NEW	new LED exterior area lig	13	26	0.3	0.5	2,221	4,380
IN	Exterior	3372	Schuyler-Colfax-Middle Scho	Bldg Mt Fixture 4	ext	50W HI PRESSURE SODI	canopy	3	65	0.2	26 WATT LED/NEW	new LED exterior area lig	3	26	0.1	0.1	512	4,380
IN	Exterior	3373	Schuyler-Colfax-Middle Scho	Bldg Mt Fixture 5	ext	2x150W INCANDESCENT	sconce	2	300	0.6	49 WATT LED/NEW	new LED flood	2	49	0.1	0.5	2,199	4,380
IN	Exterior	3374	Schuyler-Colfax-Middle Scho	Bldg Mt Fixture 6	ext	150W HI PRESSURE SOD	wallpack	1	190	0.2	70 WATT LED/NEW	new LED wallpack	1	70	0.1	0.1	526	4,380
IN	Exterior	3375	Schuyler-Colfax-Middle Scho	Bldg Mt Fixture 7	ext	50W LO VOLT INC HALO	wallpack	4	60	0.2	NO RETRO	no change needed		60	0.2			4,380
IN	Exterior	3376	Schuyler-Colfax-Middle Scho	Bldg Mt Fixture 8	ext	60W INCANDESCENT	wallpack	4	60	0.2	11W COMPACT SI/29708/CF11	screw in	4	11	0.0	0.2	858	4,380

Appendix for ECM 4:
Lighting System Improvements

II. Manufacturer Specification Sheets

This page is intentionally left blank.

These fixtures will go mainly in classrooms, cafeteria, hallways and offices.

LITHONIA LIGHTING®

Catalog Number	
Notes	
Type	

FEATURES & SPECIFICATIONS

INTENDED USE — The RT8R relight assembly is the ideal solution for renovating obsolete parabolic or lensed troffer systems, delivering improved quality of light and refreshing the space. RT8R volumetric lighting eliminates the "cave effect" by delivering the ideal amount of light to walls, work surfaces, and people.

The RT8R relight assembly is recommended for schools, offices, hospitals and other general lighting applications. **Certain airborne contaminants can diminish integrity of acrylic.**

Click here for Acrylic Environmental Compatibility table for suitable uses.

CONSTRUCTION — Universal end brackets containing the pre-wired ballast and sockets are constructed of 20-gauge powder-painted steel and are secured to the host fixture with provided TEK screws. **Bracket flange is painted black to match existing product reveal.** A splice box is provided to enclose electrical connections, and a ballast disconnect plug system is provided as standard.

The reflector system uses a highly reflective white finish for optimum efficiency and attaches securely to the end brackets with quarter-turn fasteners. A one-piece trim assembly serves as the instrument that delivers the light. Molded and recyclable PETE (polyethylene) reflector is firmly attached to the universal bracket via reliable hinge and latch assembly. Included as part of the trim assembly are two linear prismed acrylic refractors with light-diffusing finish for even illumination and lamp obscuration.

Splice box replaces the typical wireway by providing a cover for the connections of incoming supply wire and is attached to the host fixture with two TEK screws.

OPTICS — Luminous characteristics are carefully managed at high angles, providing just enough intensity to develop the volumetric effect. Regressed, one-piece refractive system obscures and softens the lamp and smoothly washes the reflector with light. Linear faceted reflectors soften and distribute light into the space, and minimize the contrast between the fixture and the ceiling. Mechanical cutoff across the reflector and fresnel refraction along the reflector provide high-angle shielding and a quiet ceiling.

Sloped endplates provide a balanced fixture-to-ceiling ratio while enhancing the perception of the fixture depth.

ELECTRICAL — Standard ballast is high-efficiency, CEE (Consortium for Energy Efficiency) qualified, instant start, <10% THD, universal voltage and sound rated A. Suggested lamps are high-lumen, long-life super T8 lamps which contribute to optimizing system performance. Optional program start and step-dim bi-level ballasts are available as well as several ballast factor options to maximize energy savings and to allow the amount of light to be balanced to the application.

INSTALLATION — Trim hinges from either side. Lamp access by hinging trim down to 90°, providing hands-free access to lamps. For hands-free ballast access, continue process by removing two quarter-turn latches and remove reflectors.

LISTINGS — UL/cUL Classified. Labeled for use in both static and air-handling fixtures. Does not impact existing fixture UL listing. NYC approved (#49192).

WARRANTY — 1-year limited warranty. Complete warranty terms located at: www.acuitybrands.com/CustomerResources/Terms_and_conditions.aspx

Protected by one or more of US Patent Nos. 7,229,192; D541,467; D541,468; D544,633; D544,634; D544,992; D544,933 and additional patents pending.

Note: Specifications subject to change without notice.

RT8 VOLUMETRIC RECESSED LIGHTING

RELIGHT

Relight Volumetric Lighting

2RT8R

FLUORESCENT
2' X 4' Relight
2 Lamp
High-performance T8

Specifications

Intended to be installed in most existing parabolic recessed fixtures (T-grid installation).

Weight: 20 lbs.

ORDERING INFORMATION For shortest lead times, configure products using **bolded options**.

Example: 2RT8R 232 BSNP

2RT8R	232			
Series	**Lamp type**	**Voltage**	**Ballast**	**Options**
2RT8R Recessed relight	**232** 2-lamp, 32W T8 (48")	**(blank)** MVOLT[1,2] 347 347V	**BILP** IS, high efficiency, .78 bf (low) **BINP** IS, high efficiency, .88 bf (normal) BIHP IS, high efficiency, .1.20 bf (high)[3] BSNP PS, step dimming, high efficiency, .88 bf (normal)	**JP18** Job packaging - 18 kits

Accessories: *For field installation.*

RRC4	Side reveal cover (pair), available in sets of five (pairs) or 25 (pairs)

Notes

1 MVOLT standard for 120V-277V applications.
2 Not available in 347V.
3 Not available in high-efficiency 347V.

These fixtures will be going in classrooms, bathrooms, cafeterias, lobby, locker room, lounges, offices.

Category: ECS
Energy Conservation Series

Prefix:
LPW

Fixture Series (Name):
Low Profile Wrap

RENOVA™
Innovative Lighting Ideas
Energy Efficient Solutions

Low Profile Wrap Series
general purpose fluorescent luminaire

GENERAL DESCRIPTION

The Low Profile Wrap (LPW) Series has been developed for general illumination for surface or pendant mounted applications. This series utilizes computer designed reflector technology for optimal fixture efficiency, reduction of energy consumption and improved quality of light. It also provides instant-on operation and offers many other energy saving options.

Typical applications for this type of product are interior spaces where finished ceilings exist. Applications include:

- Corporate / Office Buildings
- Hospitals, Government Facilities and Military Bases
- Retail and Industrial Facilities
- Schools, Colleges and Universities

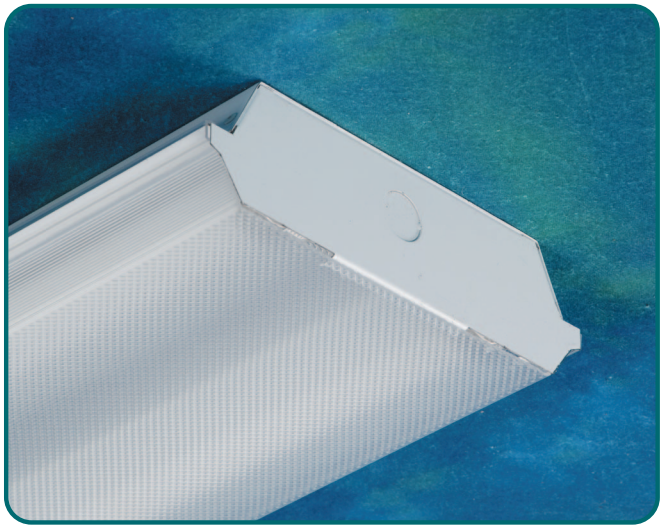

DESIGN FEATURES / SPECIFICATIONS

CONSTRUCTION
- Precision die formed from 22 ga. cold rolled steel.
- Mechanically fastened or resistance welded depending on model.
- Heavy gauge steel (CRS) may be custom ordered.
- Finish to be pre-painted gloss white polyester powder coat.
- Post-painted polyester powder coat finishes are available. Consult factory for all special colors and finishes.
- Heavy guage steel (NYC) and heavy guage aluminum are available as alternate materials.

REFLECTOR
- Precision die formed optics which has been designed for maximum efficiency and photometric properties using the latest CAD software.
- Choice of optics includes focused, normal and spread beam distribution. Consult factory for custom optics design and spacing criteria options.
- Choice of materials include:
  - Alanod Miro4® Enhanced Specular Aluminum, 95% total reflectance, 25 year warranty.
  - Enhanced Specular Aluminum, 92% total (min.) reflectance, 25 year warranty.
  - High Reflectance White Powder Coated Aluminum, 91% total reflectance, 10 year warranty.
  - Polished Aluminum, 87% total (min.) reflectance, 25 year warranty.
  - Consult factory for availability of all other material choices.

LAMPHOLDERS
- Vossloh-Schwabe® premium type featuring:
  - Anti-vibration internal lamp locking design
  - High temperature resistant ("T" marking).
  - Heat and UV blocking shield to prevent degradation of material.
  - Multi-point contact design for optimum lamp pin contact.
  - Produced in accordance with DIN ISO 9001 and IEC standards.

BALLASTS
- All standard ballasts are electronic, energy saving, thermally protected, Class-P, non-PCB, Sound Rated "A", 0 degree (Type 1 Outdoor). Verify with factory for latest information regarding High Temperature (HT) or Extreme Low Temperature (XLT) rated ballast options.
- UL/CSA certified, where applicable. Compliant with Federal Ballast Law (Public Law 100-357, 1988).
- Choice of ballast factors. L=Low, N=Normal, H=High.
- Choice of dedicated, universal or special voltage - Consult factory for available options.
- Warranted by ballast manufacturer. Typical ballast warranty is for 5 years (120-277v) and 3-years (347-480v). Consult factory for latest warranty information.

LAMPS
- Supplied by others unless otherwise specified.
- Factory installed if required - Consult factory.
- Lamp type, CRI ratings, temperature colors, lamp life ratings are all viable options which can be supplied - Consult factory for information.

LENS (Diffuser)
- Extruded profile for precision fit.
  - 100% virgin clear acrylic resin (for max. optical clarity).
  - Linear prisms extruded into sides of lens.
  - Pattern 12 prisms embossed into bottom of lens
  - 30% "DR" additive (standard) to resist breakage (50% "DR" additive optional).
  - Consult factory for all available lens options.

MOUNTING
- The luminaire may be surface mounted or may be suspended by pendant, threaded rod, hook, chain or cable. (Mounting hardware supplied by others unless otherwise specified).

ELECTRICAL
- Luminaire is bi-national listed and labeled (UL 1598 and CSA C22.2 No. 250.0-00) and is suitable for damp locations.
- Product includes luminaire disconnect as specified in NEC 410.73(G), 2005 Edition, and CEC part I, rule 30-308(4), 2006 Edition.

QUALITY CONTROL
- All fixtures and retrofit kits are designed, fabricated, assembled and tested at RENOVA's manufacturing facility. All fixtures are 100% lamp tested, inspected and labeled prior to shipment.

GUARANTEE
- RENOVA warrants all fixtures to be free of defects in manufacturing and workmanship for a period of (1) year from date of purchase. This warranty excludes damage of any kind resulting from improper installation, misuse, abuse, accidents, mis-application, or natural disasters. Please refer to the "Terms and Conditions" section of the RENOVA website for additional information.

Note: RENOVA products are constantly being improved; therefore, the information shown is subject to change without notice. Always consult your lighting representative or RENOVA Lighting Systems, Inc. for the latest information.

RENOVA Lighting Systems, Inc. • 15 Wellstown Road • Ashaway, RI 02804 • (800) 635-6682 • www.renova.com

These fixtures are going in offices, bathrooms, cafeteria, gym, library, offices.

Category: ECS
Energy Conservation Series

Prefix:
WPW

Fixture Series (Name):
Wide Profile Wrap

RENOVA™
Innovative Lighting Ideas
Energy Efficient Solutions

Wide Profile Wrap Series
general purpose fluorescent luminaire

GENERAL DESCRIPTION

The Wide Profile Wrap (WPW) Series has been developed for general illumination for surface or pendant mounted applications. This series utilizes computer designed reflector technology for optimal fixture efficiency, reduction of energy consumption and improved quality of light. It also provides instant-on operation and offers many other energy saving options.

Typical applications for this type of product are interior spaces where finished ceilings exist. Applications include:

- Corporate / Office Buildings
- Hospitals, Government Facilities and Military Bases
- Retail and Industrial Facilities
- Schools, Colleges and Universities

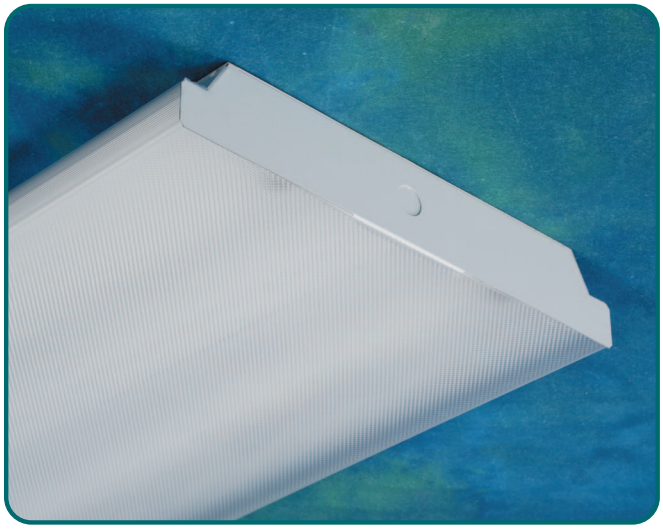

DESIGN FEATURES / SPECIFICATIONS

CONSTRUCTION
- Precision die formed from 22 ga. cold rolled steel.
- Mechanically fastened or resistance welded depending on model.
- Heavy gauge steel (CRS) may be custom ordered.
- Finish to be pre-painted gloss white polyester powder coat.
- Post-painted polyester powder coat finishes are available. Consult factory for all special colors and finishes.
- Heavy guage steel (NYC) and heavy guage aluminum are available as alternate materials.

REFLECTOR
- Precision die formed optics which has been designed for maximum efficiency and photometric properties using the latest CAD software.
- Choice of optics includes focused, normal and spread beam distribution. Consult factory for custom optics design and spacing criteria options.
- Choice of materials include:
  - Alanod Miro4® Enhanced Specular Aluminum, 95% total reflectance, 25 year warranty.
  - Enhanced Specular Aluminum, 92% total (min.) reflectance, 25 year warranty.
  - High Reflectance White Powder Coated Aluminum, 91% total reflectance, 10 year warranty.
  - Polished Aluminum, 87% total (min.) reflectance, 25 year warranty.
  - Consult factory for availability of all other material choices.

LAMPHOLDERS
- Vossloh-Schwabe® premium type featuring:
  - Anti-vibration internal lamp locking design
  - High temperature resistant ("T" marking).
  - Heat and UV blocking shield to prevent degradation of material.
  - Multi-point contact design for optimum lamp pin contact.
  - Produced in accordance with DIN ISO 9001 and IEC standards.

BALLASTS
- All standard ballasts are electronic, energy saving, thermally protected, Class-P, non-PCB, Sound Rated "A", 0 degree (Type 1 Outdoor). Verify with factory for latest information regarding High Temperature (HT) or Extreme Low Temperature (XLT) rated ballast options.
- UL/CSA certified, where applicable. Compliant with Federal Ballast Law (Public Law 100-357, 1988).
- Choice of ballast factors. L=Low, N=Normal, H=High.
- Choice of dedicated, universal or special voltage - Consult factory for available options.
- Warranted by ballast manufacturer. Typical ballast warranty is for 5 years (120-277v) and 3-years (347-480v). Consult factory for latest warranty information.

LAMPS
- Supplied by others unless otherwise specified.
- Factory installed if required - Consult factory.
- Lamp type, CRI ratings, temperature colors, lamp life ratings are all viable options which can be supplied - Consult factory for information.

LENS (Diffuser)
- Extruded profile for precision fit.
  - 100% virgin clear acrylic resin (for max. optical clarity).
  - Linear prisms extruded into sides of lens.
  - Pattern 12 prisms embossed into bottom of lens
  - 30% "DR" additive (standard) to resist breakage (50% "DR" additive optional).
  - Consult factory for all available lens options (materials & prism patterns).

MOUNTING
- The luminaire may be surface mounted or may be suspended by chain or cable. (Mounting hardware supplied by others unless otherwise specified).

ELECTRICAL
- Luminaire is bi-national listed and labeled (UL 1598 and CSA C22.2 No. 250.0-00) and is suitable for damp locations.
- Product includes luminaire disconnect as specified in NEC 410.73(G), 2005 Edition, and CEC part I, rule 30-308(4), 2006 Edition.

QUALITY CONTROL
- All fixtures and retrofit kits are designed, fabricated, assembled and tested at RENOVA's manufacturing facility. All fixtures are 100% lamp tested, inspected and labeled prior to shipment.

GUARANTEE
- RENOVA warrants all fixtures to be free of defects in manufacturing and workmanship for a period of (1) year from date of purchase. This warranty excludes damage of any kind resulting from improper installation, misuse, abuse, accidents, mis-application, or natural disasters. Please refer to the "Terms and Conditions" section of the RENOVA website for additional information.

Note: RENOVA products are constantly being improved; therefore, the information shown is subject to change without notice. Always consult your lighting representative or RENOVA Lighting Systems, Inc. for the latest information.

RENOVA Lighting Systems, Inc. • 15 Wellstown Road • Ashaway, RI 02804 • (800) 635-6682 • www.renova.com

OCTRON® 800 XP® SUPERSAVER® ECOLOGIC®3

EXtended Performance Fluorescent Lamps

The OCTRON 800 XP SUPERSAVER T8 fluorescent offering includes a full complement of lengths and wattages, ensuring there is an energy-saving lamp to satisfy nearly all applications. These lamps operate on standard T8 instant start systems and provide up to 22 percent energy savings over 32 Watt lamps. At 11¢/kWh and 4000 hours of operation per year, the 22 percent energy savings translate to a savings of $12.32 per fixture per year for a 4-lamp fixture. The initial lumen output, lumen maintenance and high color rendering of the OCTRON 800 XP SUPERSAVER/ECO3 lamps help ensure that lighting quality is maintained while energy is saved. These lamps pass the Federal TCLP test, classifying them as non-hazardous waste in most states and feature lead-free glass, bases and manufacturing process, reducing overall environmental impact.

For optimal performance and system warranty, pair with QUICKTRONIC® electronic ballast systems.

Key Features & Benefits

- Energy savings compared to standard 32W T8 lamp
  - 22% with the 25W XP®/SS
  - 12% with the 28W XP®/SS
  - 6% with the 30W XP®/SS
- 94% mean lumens
- Lead free
- Made in the USA
- Dimmable (see application note 5)
- TCLP and RoHS compliant
- Retrofit lamp for existing T8 instant start systems
  - 40,000 hours rated life @ 12 hours per start
- Increased life on SYLVANIA QUICKTRONIC® PROStart® PSX and PSN programmed rapid start ballasts
  - 42,000 hours rated life @ 12 hours per start
- QUICK60+® system warranty when lamps are paired with QUICKTRONIC electronic ballasts

SYLVANIA OCTRON ECOLOGIC3 T8 fluorescent lamps pass the Federal Toxic Characteristic Leaching Procedure (TCLP)[1] criteria for classification as non-hazardous waste in most states[2].

ECOLOGIC3 represents a more comprehensive approach to sustainability encompassing high efficiency, long life and RoHS/TCLP compliance.

1. TCLP test results are based on NEMA LL Series standards and are available on request.
2. Lamp disposal regulations may vary; check your local & state regulations.

MADE IN USA

LEAD-FREE

RoHS compliant
This light source meets restrictions on hazardous substances.

ecologic3

Product Offering

Lamp Type	Wattage	CCT
FO17/15W/800XP/SS/ECO3	15	3000K, 3500K, 4100K, 5000K
FO25/21W/800XP/SS/ECO3	21	3000K, 3500K, 4100K, 5000K
FO32/25W/800XP/SS/ECO3	25	3000K, 3500K, 4100K, 5000K
FO28/800XP/SS/ECO3	28	3000K, 3500K, 4100K, 5000K
FO30/800XP/SS/ECO3	30	3000K, 3500K, 4100K, 5000K
FO32/25W/800/XP/XL/SS/ECO3	25	3000K, 3500K, 4100K
FO28/800/XP/XL/SS/ECO3	28	3000K, 3500K, 4100K, 5000K
FO96/50W/800/XP/SS/ECO3	50	3500K, 4100K, 5000K
FO96/54W/800/XP/SS/ECO3	54	3500K, 4100K, 5000K

Application Information

Applications

- Cove
- Direct/indirect luminaires
- Recessed troffers
- Schools
- Valance

Application Notes

1. FO25, FO28 and FO30 SUPERSAVER lamps are recommended to be used on F32T8 instant start ballast with minimum open circuit voltage of 550V RMS at the lamp.
   a. Electronically ballasted fixture configurations which operate lamps remotely, such as Master/Satellite applications, can cause reduction of lamp open circuit voltage, in the remote fixture, below the minimum required for reliable lamp starting. For more information, please call 1-800-LIGHTBULB and ask for Ballast Technical Assistance or call your fixture manufacturer.
   b. Not recommended to be used: (1) in remotely ballasted fixtures with lamp open circuit voltages below 550V, (2) in air handling fixtures, (3) on low power factor ballasts or (4) inverter operated emergency lighting systems unless any of the above equipment is specifically listed for SUPERSAVER (SS) lamps. Any of the above situations could result in lamp starting and stabilization problems, or system compatibility issues.
2. FO96 SUPERSAVER lamps are recommended to be used on F96T8 instant start ballast with minimum open circuit voltage of 725V.
3. If a 28W SUPERSAVER lamp is exposed to drafts or the ambient temperature falls below 60°F (70°F for 25W), striation (a rhythmic pulsing pattern of light running down the tube) and/or reduction in lamp brightness may occur. While visually disconcerting, neither behavior is damaging to the lamp and removing the cause (draft or temperature) will return the lamp to normal operation.
4. Fixture must conform to ANSI C78.81–2005 requirements for luminaire design.
5. FO96 types are not dimmable. For all other types, contact OSRAM SYLVANIA for approved dimming ballasts.

QHE High Efficiency Instant Start

NEMA Premium

QUICKTRONIC® High Efficiency QHE instant start ballasts operate OCTRON® T8 lamps with maximum efficacy and high lumen output, while providing **30-60% energy savings** when compared to F40T12 magnetic systems. The **QHE** energy saving electronic T8 ballasts save an additional 6% over standard electronic ballasts without compromising light output or lamp life, thus allowing for a quicker payback.

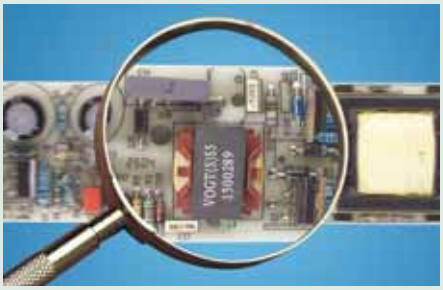

QHE-IS: High Efficiency Series utilizes high grade components and optimized ballast design, to ensure that >90% of the system power is provided to the lamps. Enhanced efficiency inductors and semiconductors play a critical role.

TYPICAL SAVINGS — QHE-IS: Two Lamp

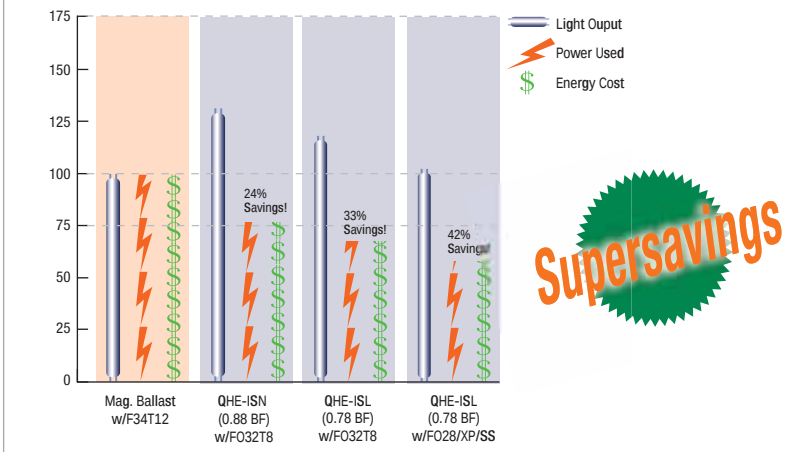

Based on 4000 operating hours per year with energy cost of $0.10/kWh
Magnetic T12 system: 'Energy Saving' T12 Magnetic ballast with F34T12CW lamps
Electronic T8 systems: 0.88 & 0.78 ballast factor – High Efficiency Instant Start ballast with FO32T8/800/XPS/ECO and FO28T8/800/XP/SS/ECO lamps

Key System Features:

- Highest ballast efficiency – over 90%
- NEMA Premium Ballast Program Compliant
- Highest system efficiency available
- Lowest power instant start systems
- Universal input voltage (120-277V)
- 30-60% energy savings
- SAME LIGHT, LESS POWER
- Available ballast factors:
  – Low (0.78)
  – Normal (0.88)
  – High (1.15-1.20)

Applications:

- Meeting stringent energy codes
- Energy retrofits
- Commercial & retail
- Hospitality & institutional

SEE THE WORLD IN A NEW LIGHT SYLVANIA

The QUICK60+® System Warranty

It's the simple way to make sure you're completely covered
Just call 1-800-LIGHTBULB

Simply better coverage

QUICK60+® is the industry's original and most comprehensive system warranty, providing coverage for QUICKTRONIC® ballasts and the SYLVANIA lamps they power. As the originator of the System Solution,® we have unparalleled lamp and ballast technology — within one company — that enables us to produce systems that perform better and are more reliable. Of course we design our ballasts and lamps to be compatible with other manufacturers' products and back their operation accordingly, but our systems approach allows us to back our systems with a warranty that simply gives you better coverage.

It starts with the ballast. When you purchase any QUICKTRONIC ballast, it's warranted for a period of up to 60 months. Then, when you add SYLVANIA lamps, you benefit from additional coverage for those lamps; that's the PLUS.

More combinations and wider applications provide the broadest range of coverage available in the industry. Another benefit comes each time you group relamp, as the lamp portion of the warranty will extend for an additional term. In short, if you have SYLVANIA ballasts and lamps, you're covered — it's that simple.

Simply peace of mind

When you specify SYLVANIA electronic ballasts and lamps, your installation will enjoy the highest available levels of performance, and you will enjoy the added benefit of peace of mind. If there is an issue, you'll never need to worry about whether it's the lamp or it's the ballast, and you won't get caught in the middle of solving the problem (we may argue with ourselves, but you won't have to!). All it takes is a phone call and you can get back to business. The bottom line is these are our products, and we stand behind them as no one else can.

Simply better service

Only QUICK60+offers you a choice of three service options to resolve warranty claims for ballasts, including our unique "Fixtureside Assistance℠" program from our own nation-wide service organization, SYLVANIA Lighting Services. At our discretion, we will dispatch a trained technician to make a service call to resolve any issues with our products. Our people taking care of our products ensure that you get the level of expert service you deserve. Of course, OSRAM SYLVANIA can also coordinate ballast replacement with an independent service provider, or you can manage the replacement yourself and we will determine labor reimbursement costs. OSRAM SYLVANIA will determine which option best suits your needs to make sure you're covered.

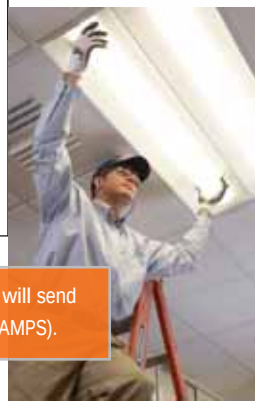

For lamp replacements OSRAM SYLVANIA will send lamps to your facility (NO LABOR FOR LAMPS).

The QUICK60+® warranty is simple to put to work. If you have SYLVANIA electronic ballasts and lamps — you're covered. Just call 1-800-LIGHTBULB (1-800-544-4828) and request warranty service. Any installation of QUICKTRONIC® ballasts and SYLVANIA brand lamps is covered by QUICK60+ for periods defined in the warranty and by the date codes incorporated on all of our products. As an added value, by simply registering the installation, all warranty periods will be defined by the actual date of installation providing complete assurance that you'll receive the coverage you deserve. If there's ever a problem, it's not a problem — you won't have to look up old records and worry about who's responsible. It's that simple.

SEE THE WORLD IN A NEW LIGHT SYLVANIA

QUICK60+® LIMITED WARRANTY

The Heart of a Comprehensive System Service Program

Compare lighting system warranties – you'll see that our QUICK60+ warranty offers better coverage, more service options and, more important, peace of mind.

Combination Lamp and Ballast System Limited Warranty

OSRAM SYLVANIA Products Inc. ("OSPI") warrants SYLVANIA lamps installed on QUICKTRONIC® ballasts to be free from defects in material and workmanship and to operate from the date of installation (or date of manufacture if installation date is not known or available) for the time periods and subject to the Terms and Conditions specified below. If lamps fail to operate for the warranty period, OSPI will provide a free replacement lamp *(but no labor allowance)*. If a QUICKTRONIC ballast fails to operate within the warranty period, OSPI will provide a free replacement ballast and labor allowance in accordance with the "Labor Options" set forth below.

System[3,4]	Lamp	Ballast Warranty Period[8]	Lamp Warranty Period*
QUICKTRONIC® T8[1]	OCTRON XPS®, XP & XP/SS[2, 3]	60 mos.	36 mos.
QUICKTRONIC T8[1]	OCTRON XP/XL & XP/XL/SS family	60 mos.	48 mos.
QUICKTRONIC T8[1]	OCTRON family	60 mos.	30 mos.
QUICKTRONIC T8 High Ambient[1, 9]	OCTRON XP, XP/SS[2, 3]	36/60mos.@<90°/70°C	36 mos.
QUICKTRONIC 59	OCTRON FO96/XP, FO96/XP/SS	60 mos.	30 mos.
QUICKTRONIC 59	OCTRON FO96	60 mos.	24 mos.
QUICKTRONIC 86/T8HO High Ambient[1]	OCTRON FO96HO	36/60mos.@<90°/70°C	30 mos.
QUICKTRONIC 96IS/96HO & 40T12	N/A	60 mos.	N/A
QUICKTRONIC T5[1], T5/HO[1]	PENTRON® Family	60 mos.	24 mos.
QUICKTRONIC 54T5HO[1] High Ambient	PENTRON® FP54/HO, FP54/C/HO	36/60 mos.@<90°/70°C	36 mos.
QUICKTRONIC 54T5/HO[1]	PENTRON® FP54/HO, FP54/C/HO	60 mos.	36 mos.
QUICKTRONIC 54PHO & DL40	DULUX® FT55DL, FT40DL & FT40/28SS	60 mos.	12 mos.
QUICKTRONIC CF[1]	DULUX® D/E, T/E, T/E/IN, T/E/C	60 mos.	12 mos.
QUICKTRONIC FM	FM	24 mos.	6 mos.
QUICKTRONIC ICE[1, 5]	ICETRON®	60 mos.	60 mos.
QUICKTRONIC MH[7]	METALARC® Family[6] (7K-12K hrs. avg. rated life)	36/60 mos.	6 mos.
QUICKTRONIC MH[7]	METALARC® Family[6] (15K-20K hrs. avg. rated life)	36/60 mos.	12 mos.

***NOTE:** Fluorescent lamp warranty periods are based on a 3 hour minimum cycle, unless otherwise noted, with a maximum of 4000 hours per year. Other operating cycles may affect warranty period. Lamp warranty can renew when installation is group relamped, contact OSRAM SYLVANIA for details.

[1] **Occupancy sensor application, 15 minute/start minimum, allowed with QUICKTRONIC PROStart® and with QUICKTRONIC ICE ballasts.**

[2] OCTRON SUPERSAVER® bipin lamps operate on Instant Start & PROStart (non-dimming) models only.

[3] **QUICKTRONIC, Professional Series and High Efficiency Series including all IS, PS & DIM models where applicable.**

[4] **Labor options must be pre-approved by OSPI. Any labor option or cost that is not pre-approved will not be eligible for reimbursement.**

[5] ICETRON Lamp Warranty Period allows up to 8760 hrs per year (continuous operation).

[6] Contact OSRAM SYLVANIA for detailed specifications of METALARC® lamps.

[7] QUICKTRONIC MH ballasts warranty is 36 or 60 months, depending on maximum case temperature. Refer to product specifications for details. Electronic HID system warranty period is based on a minimum cycle of 10hr/start up to a maximum operation of 6,000 hours/year.

[8] **Maximum Case Temperature <70°C, for normal environmental operating conditions (40°C max. ambient) unless noted. Refer to product specifications for details.**

[9] QUICKTRONIC T8 High Ambient (HT) Series

TERMS AND CONDITIONS

SYLVANIA lamps and QUICKTRONIC ballasts must be installed together as a system and be installed and operated under suitable environmental conditions and in accordance with the latest National Electrical Code, Underwriters Laboratory Bulletins, and ANSI Specifications. **This warranty will not apply in the event of conditions demonstrating abnormal use or stress, such as operating temperatures in excess of maximum rated temperatures, under/over voltage conditions, excessive switching cycles (see above Note #1) or operating hours, dirty or cracked sockets, or improper lamp or ballast installation.** Replacement of SYLVANIA lamps with lamps of other manufacturers will void the lamp portion of this warranty. Replacement of the QUICKTRONIC ballast with any other ballast will void the entire warranty.

WARRANTY ACTIVATION / SERVICE CLAIMS

The QUICK 60+ warranty is automatically activated after OSPI receives a completed QUICK 60+ warranty registration form within 30 days after installation. An acknowledgment will be sent for each registration along with a reference number for future correspondence. Service claims can be made by contacting 1-800-LIGHTBULB to initiate the process for problem resolution.

LABOR OPTIONS (Ballast and ICETRON lamps only)

No labor allowance is made for any lamp replacement except ICETRON, during the warranty period. OSPI provides for several labor options for service under the QUICK 60+ warranty program.

1. OSPI will provide full service coverage through SYLVANIA LIGHTING SERVICES at no cost to the user of the ballast, or

2. OSPI will contact a service provider and coordinate replacement at no cost to the user of the ballast, or

3. OSPI will reimburse the purchaser reasonable, customary and necessary labor charges required to install the ballast replacement.

4. Labor options must be pre-approved by OSPI. Any labor option or cost that is not pre-approved will not be eligible for reimbursement.

RETURN OF DEFECTIVE PRODUCT

After contacting OSRAM SYLVANIA and receiving a return AUTHORIZATION NUMBER, the user shall promptly return the product at the user's expense to OSRAM SYLVANIA after receiving instructions as to if, when and where to ship product. Failure to follow this procedure shall void this warranty.

REPLACEMENT OF PRODUCT, LIMITS OF LIABILITY

The foregoing shall constitute the sole and exclusive remedy of the purchaser and the sole and exclusive liability of OSPI. NO WARRANTY OF MERCHANTABILITY OR FITNESS FOR A PARTICULAR PURPOSE IS MADE OR IS TO BE IMPLIED. OSPI will not, under any circumstance, whether as a result of breach of contract or warranty, tort, or otherwise, be liable for any incidental, special or consequential damages, including lost profits or revenues or any other costs or damages.

OSPI reserves the right to examine all failed lamps and/or ballasts and reserves the right to be the sole judge as to whether any lamps and/or ballasts are defective and covered under this warranty.

These are the fixtures that will go in the gyms.

ESSENTIALS™ BAY SERIES v 2.0

4 LED MODULES (4M) FIXTURE ORDERING

TYPE

SAMPLE ORDERING NUMBER [1]

LW-LUSIO-ES2-4M-40-CA-BAFN-120-MBR

(Fixture shown with optional integrated occupancy sensor.)

LW-LUSIO-ES2-4M -	-	-
PART NUMBER	**LED COLOR TEMPERATURE**	**LENS**
	40 4000K ANSI [2] 50 5000K ANSI [2]	CA Clear acrylic lens FP Frosted polycarbonate lens [3] NL No lens

-	-	-
OPTIC	**VOLTAGE**	**MOUNTING**
BAFN No baffle [3] BAFY Reflector baffles [3]	120 120V 208 208V 240 240V 277 277V 347 347V 480 480V	MBR Mounting bracket for surface mount and 3/4-inch stem mount. Not required with the emergency battery back-up (EMB) option.[4] HOOK Hook/loop mount [5] For a cable ready fixture, leave part number field blank. [6]

-	-
DIMMING	**OCCUPANCY SENSOR**
DIMY Dimming For no dimming, leave part number field blank.	OCC20 10-20 ft (3-6 m) heights OCC40 21-40 ft (6-12 m) heights OCCDIM20 10-20 ft (3-6.1 m) heights [7] OCCDIM40 21-40 ft (6.4-12.1 m) heights [7] For no sensor, leave part number field blank.

-	-
CORD/PLUG	**BATTERY BACK-UP**
CL715 Locking plug, 6 ft, 15 AMP, 277V [8] CL720 Locking plug, 6 ft, 20 AMP, 277V [8] C6W 600v SO cord, 6 ft, no plug [8] C515 Straight plug, 6 ft, 120V [8] CL2420 Locking plug, 6 ft, 15 AMP, 347V [8] CL820 Locking plug, 6 ft, 15 AMP, 480V [8] CL515 Locking plug, 6 ft, 120V [8] C15W 15 ft, 600V SO cord, no plug [8] For no cord/plug, leave part number field blank.	EMB Emergency battery back-up [4] For no battery back-up, leave part number field blank.

1 Information on Lusio accessories is available on a separate specification sheet.

2 Consult factory for other color temperatures or 80 CRI minimum. Lead times and efficacy may be affected.

3 BAFN must be selected with the frosted polycarbonate lens (FP) option. BAFY is suggested for mounting heights below 15 feet (4.6 m).

4 Mounting bracket (MBR) ships separately from the fixture for pre-installation. Mounting bracket features are included with the battery back-up (EMB) option. The mounting bracket and emergency battery back-up enclosure can be attached to a ceiling junction box and have a center knockout to accept a 3/4-inch rigid conduit or power cord. Junction box and rigid conduit are not included. See installation instructions for more information.

5 The hook/loop option (HOOK) ships separately from the fixture and includes a Lusio cable kit that is required to level the fixture.

6 All fixtures are cable ready and have a center opening to accept a 1/2-inch stem mount. Support cables and rigid conduit are not included. See accessories for Lusio cable kits.

7 Occupancy sensors with dimming are only available for 120-277V models and require a wireless programmer (Part No. LW-LUSIO-ES2-OCCDIMPROG) for setup. See the Lusio Accessories page for more information.

8 Cords are not available on fixtures with MBR, HOOK, or EMB options. All cords are 16/3 and white.

RoHS c UL us

PHOTOMETRIC AND DISTRIBUTION DATA IS TYPICAL FOR THIS FIXTURE. PERFORMANCE WILL VARY DEPENDING ON LED AND POWER SUPPLY. THIS FIXTURE IS MANUFACTURED TO AN OVERALL PERFORMANCE TOLERANCE OF +/- 6%.

Copyright © 2013. LightWild, Inc. Lusio Commerical & Industrial Lighting is a brand of LightWild. All rights reserved. 071713-1.
All specifications subject to change without notice. Visit www.LusioLighting.com for updates.

These are going in gyms and auditoriums.

2. Surface

Surface Module 7200

DIMENSIONS

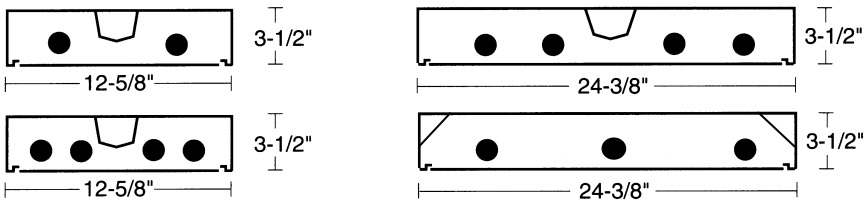

Dimensions are subject to change. For critical applications, verify all dimensions with factory.

UL LISTED

NOW AVAILABLE IN LED!

ORDERING

Shallow design surface module available in 1x2, 1x4, 1x8, 2x2, 2x4, & 4x4 sizes in 2, 3, 4, 6, and 8 lamp configurations in T8, T5, and BIAX and LED. End and side seams are welded and filled to provide the appearance of a smooth continuous channel. Flush steel doorframe is standard. Optional glare dampening ribbed aluminum regressed frame. Door frame is secured by rotary cam latches. For surface and pendant mounting individually or in continuous rows. Available with specular aluminum reflector (87% reflectance) high reflective white reflector (92% reflectance) or high efficiency specular aluminum reflector (95% reflectance).

HOUSING
Die formed heavy gauge steel housing welded for rigidity and structural stability.

ELECTRICAL
Energy saving electronic ballasts comply with Federal Energy Efficiency standards. Ballasts are <10% THD and include 5 year manufacturer's warranty. Ballasts operate on 120V-277V (UNV) unless specified otherwise.

SHIELDING
100% virgin acrylic prismatic is standard. Consult option sheet for other shieldings.

FINISH
All metal parts are phosphate coated and painted after fabrication with baked white enamel electrostatically applied providing a durable finish with a minimum 89% reflectance.

CERTIFICATION
All units bear UL label. Made in U.S.A. ARRA and BAA compliant.

MODEL	SIZE	LAMP QTY	WATTAGE TYPE	VOLTAGE
7200	**1-**	2	17T8	120
	1x2 unit	2	14T5	277
		2	24T5HO	UNV
		2	8W LED	
	1-	(2, 3 or 4)	32T8	
	1x4 unit	(2, 3 or 4)	28T5	
		(2, 3 or 4)	54T5HO	
		(2, 3 or 4)	18W LED	
	2-	2	32U6	
		(2 or 3)	31U 1-5/8	
	2x2 unit	(2 or 3)	40BX	
		(2, 3, or 4)	14T5	
		(2, 3, or 4)	17T8	
		(2, 3, or 4)	24T5HO	
		(2, 3, or 4)	8 W LED	
	2-	(2, 3, 4 or 6)	28T5	
	2x4 unit	(2, 3, 4 or 6)	32T8	
		(2, 3, 4 or 6)	54T5HO	
		(2, 3, 4 or 6)	18 W & 23 W LED	
	4-	(4, 6, or 8)	32T8	
	4x4 unit	(4, 6, or 8)	18 W & 23 W LED	

OPTIONS:

EM - Emergency
DM - Dimming (Specify Type)
SA87 – Specular Aluminum Reflector
SA95 – High Efficiency Specular Aluminum Reflector
WH92 – High Reflective White
Prefix 7200R – Ribbed Glare Dampening Regressed Aluminum Door
OPAL – Opal Lens
125A12 –.125" Thick Pattern 12 Lens
WG- Wire guards
IOC- Integrated Occupancy Sensor mounted into end extender

RLE Industries ROBERT LIGHTING & ENERGY

JOB NAME:
FIXTURE TYPE:
MODEL NO:

These are going in classrooms, halls, baths, gyms, open offices, and auditoriums.

www.sylvania.com

DULUX® EL Twist

Electronic Compact Fluorescent Lamps

SYLVANIA offers DULUX EL self-ballasted medium, candelabra and GU24 based compact fluorescent lamps in a variety of Twist designs. The Dimmable Twists offer smooth dimming down to 20% of rated light output. With a reduced T2 tube diameter, Micro-Mini Twist lamps are the smallest CFL lamps available in the industry, further addressing sustainability objectives with long 12,000 hour life and TCLP-compliance.

With improved efficacy, smaller profiles, excellent color rendition and a broad range of color temperature options, DULUX EL CFLs provide a brilliant alternative to traditional incandescent and halogen light sources and are suitable for many different types of luminaires. They complement the DULUX EL Covered family of CFLs described in companion Product Information Bulletin CF047.

Key Features & Benefits

- Energy saving alternatives to incandescent lamps save up to 75% compared to similar lumen output incandescents
- Variety of medium and candelabra base shapes and wattages to satisfy most applications
- Long life: 8,000 – 15,000 hour average rated life
- Flicker-free starting
- Micro-Mini configurations are TCLP-compliant
- Increased energy savings with dimmable 14W and 24W twists
- 82 CRI
- Available in a variety of color temperatures:
  - 2700K
  - 3000K
  - 3500K
  - 4100K
  - 5000K
  - 6500K

Product Offering

Lamp Type	Wattage
Micro-Mini Twist	5W, 10W, 13W, 20W, 23W, 26W
Super Mini Twist	7W, 11W, 13W, 19W, 23W
Mini Twist	7W, 11W, 13W, 19W, 23W
Micro LED Night Light	23W
Twist	30W, 40W, 65W
Twist GU24	13W, 23W
3-Way Twist	12/22/33W, 20/30/40W
Dimmable Twist	14W, 24W

Application Information

Applications

- Chandeliers
- Decorative & vanity fixtures
- Difficult to service areas
- Floor lamps
- Sconces
- Security lighting
- Table lamps
- 3-way lamps

Application Notes

1. Do not install DULUX EL lamps on dimming circuits, unless the lamp is labelled as “Dimmable”
2. Outdoor application — use only in enclosed fixtures to avoid exposure to weather
3. Do not use in emergency exit fixtures or lights
4. Do not use on electronic timers, photocells, lighted switches or any other switches that do not meet UL20 Sec. 7.6.15
5. Meets CSA, FCC and UL requirements
6. Use only 120V AC, 60Hz circuit
7. Install and remove lamp from fixture by handling plastic base, not lamp glass
8. Best performance achieved when operated at 77°F/25°C

These are going in classrooms, private offices, halls, library gym, cafeteria.

www.sylvania.com/ledr

ULTRA HD Professional Series LED PAR Lamps

High Definition Lighting

The SYLVANIA ULTRA HD Professional Series family of LED PAR lamps offers premium performance in every category. With exceptional color quality, efficiency, and electrical design standards, this top-tier family of lamps is designed to ensure the highest aesthetics while complying with the most stringent sustainability goals. Designed to be the most efficient replacements for halogen at 3000K, these SYLVANIA LED lamps last up to 20 times longer and are rated for use in damp locations. An optimized LED selection process is used to ensure that color within the ULTRA HD Professional family of LED lamps is extremely consistent, within a 3-step MacAdam ellipse. With outstanding color rendering capabilities (95 typical CRI) and exceptionally rich deep red content (R9>60), ULTRA HD Professional Series LED lamps enhance warm color palettes and make whites more crisp, making them ideal for residential, hospitality, healthcare or retail applications. With lamp efficacies higher than 50 lumens per watt and smooth dimming performance, ULTRA HD Professional Series LED lamps are an ideal part of any energy-conservation strategy.

Key Features & Benefits

- 95 typical CRI
- Excellent color quality – within a 3-step MacAdam ellipse
- R9 greater than 60
- Assembled in USA
- No warm up time, instant on with full light output and stable color
- Lasts up to 20 times longer than comparable PAR lamps
- Available in 2700K and 3000K color temperature
- Reduces energy consumption up to 80%
- UV and IR free
- RoHS compliant
- Dimmable to 10%*
- Mercury and lead free
- Long life: up to 50,000 hours (L_{70})
- Suitable for damp locations

* Performance may vary depending on dimmer use in application. Please refer to Dimmer Compatibility List (RETRO-DIM) for a list of compatible dimmers or visit www.sylvania.com/LEDretrofit

This light source meets restrictions on hazardous substances.

Product Offering

Ordering Abbreviation	Wattage	Color Temperature	Beam Angle	Lumens
LED21PAR38/DIM/P/930/FL30	21	3000K	30°	1150
LED21PAR38/GU24/DIM/P/930/FL30	21	3000K	30°	1150
LED20PAR38/DIM/P/927/WSP12	20	2700K	12°	1000
LED20PAR38/DIM/P/930/WSP12	20	3000K	12°	1050
LED17PAR30LN/DIM/P/930/NFL25	17	3000K	25°	970
LED17PAR30LN/GU24/DIM/P/930/NFL25	17	3000K	25°	970
LED17PAR30LN/DIM/P/930/FL40	17	3000K	40°	970
LED15PAR30/DIM/P/930/FL40	15	3000K	40°	880
LED15PAR30/GU24/DIM/P/930/FL40	15	3000K	40°	880
LED10PAR20/DIM/P/930/FL30	10	3000K	30°	550
LED10PAR20/GU24/DIM/P/930/FL30	10	3000K	30°	550

This device complies with Part 15 of the FCC Rules. Operation is subject to the following two conditions: (1) This device may not cause harmful interference, and (2) this device must accept any interference received, including interference that may cause undesired operation. For FCC Part 15 user information, please see www.sylvania.com/fcc15b

Application Information

Market Segments

- Art galleries and museums
- Hospitality
- Offices
- Residential
- Restaurants
- Retail

Applications

- Accent/display lighting
- General lighting
- Recessed downlighting
- Track lighting

Application Notes

1. Operating Temperature -40°F and +113° F (-40°C and +45°C)
2. Suitable for outdoor use when used in a UL rated fixture where protected from weather
3. Use in fixtures that support 2lb. lamp
4. Not for use with emergency light fixtures or exit lights
5. Not for use in enclosed fixture
6. All PAR lamps from OSRAM SYLVANIA use polymethyl methacrylate (PMMA) for their lenses. It is a transparent thermoplastic, often used as a lightweight, shatter-resistant alternative to glass.

SEE THE WORLD IN A NEW LIGHT

These are going in bathrooms private offices, halls, and offices.

Category: ECS
Energy Conservation Series

Prefix:
SVW

Fixture Series (Name):
Standard Vanity Wrap

RENOVA™
Innovative Lighting Ideas
Energy Efficient Solutions

Standard Vanity Wrap Series
general purpose fluorescent luminaire

GENERAL DESCRIPTION

The Standard Vanity Wrap (SVW) Series has been developed for general illumination for surface (wall or ceiling) or pendant mounted applications. This series utilizes computer designed reflector technology for optimal fixture efficiency, reduction of energy consumption and improved quality of light. It also provides instant-on operation and offers many other energy saving options.

Typical applications for this type of product are interior spaces where finished ceilings and walls exist. Applications include:

- Corridors and Stairwells in Corporate / Office Buildings
- Hospitals, Government Facilities and Military Bases
- Public Areas, Utility Rooms and Lavatories
- Schools, Colleges and Universities

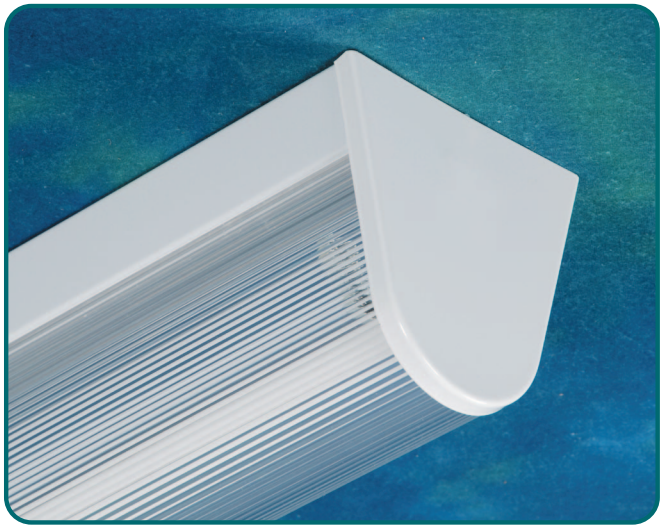

DESIGN FEATURES / SPECIFICATIONS

CONSTRUCTION
- Precision die formed from 22 ga. cold rolled steel.
- Mechanically fastened or resistance welded depending on model.
- Heavy gauge steel (CRS) may be custom ordered.
- Finish to be pre-painted gloss white polyester powder coat.
- Post-painted polyester powder coat finishes are available. Consult factory for all special colors and finishes.
- Heavy guage steel (NYC) and heavy guage aluminum are available as alternate materials.

REFLECTOR
- Precision die formed optics which has been designed for maximum efficiency and photometric properties using the latest CAD software.
- Choice of optics includes focused, normal and spread beam distribution. Consult factory for custom optics design and spacing criteria options.
- Choice of materials include:
  - Alanod Miro4® Enhanced Specular Aluminum, 95% total reflectance, 25 year warranty.
  - Enhanced Specular Aluminum, 92% total (min.) reflectance, 25 year warranty.
  - High Reflectance White Powder Coated Aluminum, 91% total reflectance, 10 year warranty.
  - Polished Aluminum, 87% total (min.) reflectance, 25 year warranty.
  - Consult factory for availability of all other material choices.

LAMPHOLDERS
- Vossloh-Schwabe® premium type featuring:
  - Anti-vibration internal lamp locking design
  - High temperature resistant ("T" marking).
  - Heat and UV blocking shield to prevent degradation of material.
  - Multi-point contact design for optimum lamp pin contact.
  - Produced in accordance with DIN ISO 9001 and IEC standards.

BALLASTS
- All standard ballasts are electronic, energy saving, thermally protected, Class-P, non-PCB, Sound Rated "A", 0 degree (Type 1 Outdoor). Verify with factory for latest information regarding High Temperature (HT) or Extreme Low Temperature (XLT) rated ballast options.
- UL/CSA certified, where applicable. Compliant with Federal Ballast Law (Public Law 100-357, 1988).
- Choice of ballast factors. L=Low, N=Normal, H=High.
- Choice of dedicated, universal or special voltage - Consult factory for available options.
- Warranted by ballast manufacturer. Typical ballast warranty is for 5 years (120-277v) and 3-years (347-480v). Consult factory for latest warranty information.

LAMPS
- Supplied by others unless otherwise specified.
- Factory installed if required - Consult factory.
- Lamp type, CRI ratings, temperature colors, lamp life ratings are all viable options which can be supplied - Consult factory for information.

LENS (Diffuser)
- Extruded profile for precision fit.
  - White opalescent lens is standard.
  - 100% virgin clear acrylic lense is optional.
  - Linear prisms extruded into lens profile.
  - 30% "DR" additive (standard) to resist breakage.
  - Consult factory for all available lens options.

MOUNTING
- The luminaire may be surface mounted or may be suspended by pendant, threaded rod, hook, chain or cable. (Mounting hardware supplied by others unless otherwise specified).

ELECTRICAL
- Luminaire is bi-national listed and labeled (UL 1598 and CSA C22.2 No. 250.0-00) and is suitable for damp locations.
- Product includes luminaire disconnect as specified in NEC 410.73(G), 2005 Edition, and CEC part I, rule 30-308(4), 2006 Edition.

QUALITY CONTROL
- All fixtures and retrofit kits are designed, fabricated, assembled and tested at RENOVA's manufacturing facility. All fixtures are 100% lamp tested, inspected and labeled prior to shipment.

GUARANTEE
- RENOVA warrants all fixtures to be free of defects in manufacturing and workmanship for a period of (1) year from date of purchase. This warranty excludes damage of any kind resulting from improper installation, misuse, abuse, accidents, mis-application, or natural disasters. Please refer to the "Terms and Conditions" section of the RENOVA website for additional information.

Note: RENOVA products are constantly being improved; therefore, the information shown is subject to change without notice. Always consult your lighting representative or RENOVA Lighting Systems, Inc. for the latest information.

RENOVA Lighting Systems, Inc. • 15 Wellstown Road • Ashaway, RI 02804 • (800) 635-6682 • www.renova.com

Category: ECS
Energy Conservation Series

Prefix:
MVT

Fixture Series (Name):
Mini Vapor Tight

RENOVA™
Innovative Lighting Ideas
Energy Efficient Solutions

Mini Vapor Tight Series
general purpose fluorescent luminaire

GENERAL DESCRIPTION

The Mini Vapor Tight (MVT) Series has been developed for all dust, damp/wet, vapor proof, cold weather and outdoor applications. Fixture can be surface (wall or ceiling), pendent, chain or cable mounted. This series utilizes computer designed reflector technology for optimal fixture efficiency, reduction of energy consumption and improved quality of light. It also provides instant-on operation and offers many other energy saving options.

Typical applications for this type of product are interior and exterior spaces where dust, moisture and vapor infiltration must be avoided. Applications include:

- Parking Garages, Car Washes, Shipping Docks and Outdoor Locations
- Government / Industrial Facilities, Gas Stations and Subways
- Swimming Pool Facilities, Locker / Shower Rooms
- Food and Drug Handling Areas, Public Areas and Commercial Kitchens

DESIGN FEATURES / SPECIFICATIONS

CONSTRUCTION
- Housing is precision injection molded from fiberglass reinforced polyester resin. Approval and / or listings as follows:
- UL/CUL/NSF International
- U.S. Department of Agriculture
- Canadian Standards Association
- Achieves IP65 / IP67 Rating (Certain models only)
- Housing matl. is self-extinguishable (ASTM D635-74)
- Internal housing and brackets to be precision die formed from 22 ga. cold rolled steel. Finish to be pre-painted gloss white polyester powder coat.

GASKETING
- New technology molecular structure gasket material is poured into pre-treated housing channel to insure stronger adhesion and to provide maximum protection against moisture and dust.

REFLECTOR
- Precision die formed optics which has been designed for maximum efficiency and photometric properties using the latest CAD software.
- Choice of optics includes focused, normal and spread beam distribution. Consult factory for custom optics design and spacing criteria options.
- Choice of materials include:
  - Alanod Miro4® Enhanced Specular Aluminum, 95% total reflectance, 25 year warranty.
  - High Reflectance White Powder Coated Aluminum, 91% total reflectance, 10 year warranty.
  - Consult factory for all other material choices.

LAMPHOLDERS
- Vossloh-Schwabe® premium type featuring:
  - Anti-vibration internal lamp locking design
  - High temperature resistant ("T" marking).
  - Heat and UV blocking shield to prevent degradation of material.
  - L/H contact design for optimum lamp pin contact.
  - Manufactured to DIN ISO 9001 and IEC standards.

BALLASTS
- All standard ballasts are electronic, energy saving, thermally protected, Class-P, non-PCB, Sound Rated "A", 0 degree (Type 1 Outdoor). Verify with factory for latest information regarding High Temperature (HT) or Extreme Low Temperature (XLT) rated ballast options.
- UL/CSA certified, where applicable. Compliant with Federal Ballast Law (Public Law 100-357, 1988).
- Choice of ballast factors. L=Low, N=Normal, H=High.
- Choice of dedicated, universal or special voltage - Consult factory for available options.
- Warranted by ballast manufacturer. Typical warranty is for 5 years (120-277v) and 3-years (347-480v). Consult factory for latest warranty information.

LATCHES
- Standard Latch - Acetal copolymer offers increased strength over conventional plastic latches.
- Stainless Steel Latch - Designed for maximum maintainability and corrosion resistance. Tamperproof screws & tool available as option.
- Additional latches to achieve IP65 and IP67 Rating. Consult factory for all available configurations.

LAMP SHIELDING (LENS)
- Clear Acrylic with a "stepped" design to provide general lamp obscurity. Lenses are injection-molded for precision fit.
- Smooth exterior surface for ease of cleaning.
- "HI" – High Impact "DR" Additive to resist breakage is optional.

LAMPS
- Supplied by others unless otherwise specified.
- Lamp type, CRI ratings, temperature colors, lamp life ratings are all viable options which can be supplied - Consult factory for information.

MOUNTING
- The luminaire may be surface mounted or may be suspended by pendant, threaded rod, chain or cable. (Mounting hardware supplied by others unless otherwise specified).
- Spring-Mount Brackets Option (Stainless Steel) provides for easy installation. This option can be factory or field installed. – Consult factory.

ELECTRICAL
- Luminaire is bi-national listed and labeled (UL 1598 and CSA C22.2 No. 250.0-00) and is suitable for damp locations.
- Product includes luminaire disconnect as specified in NEC 410.73(G), 2005 Edition, and CEC part I, rule 30-308(4), 2006 Edition.

QUALITY CONTROL
- All fixtures and retrofit kits are designed, fabricated, assembled and tested at RENOVA's manufacturing facility. All fixtures are 100% lamp tested, inspected and labeled prior to shipment.

GUARANTEE
- RENOVA warrants all fixtures to be free of defects in manufacturing and workmanship for a period of (1) year from date of purchase. This warranty excludes damage of any kind resulting from improper installation, misuse, abuse, accidents, mis-application, or natural disasters. Please refer to the "Terms and Conditions" section of the RENOVA website for additional information.

Note: RENOVA products are constantly being improved; therefore, the information shown is subject to change without notice. Always consult your lighting representative or RENOVA Lighting Systems, Inc. for the latest information.

RENOVA Lighting Systems, Inc. • 15 Wellstown Road • Ashaway, RI 02804 • (800) 635-6682 • www.renova.com

Category: ECS
Energy Conservation Series

Prefix:
SVT

Fixture Series (Name):
Standard Vapor Tight

RENOVA™
Innovative Lighting Ideas
Energy Efficient Solutions

Standard Vapor Tight Series general purpose fluorescent luminaire

GENERAL DESCRIPTION

The Standard Vapor Tight (SVT) Series has been developed for all dust, damp/wet, vapor proof, cold weather and outdoor applications. Fixture can be surface (wall or ceiling), pendent, chain or cable mounted. This series utilizes computer designed reflector technology for optimal fixture efficiency, reduction of energy consumption and improved quality of light. It also provides instant-on operation and offers many other energy saving options.

Typical applications for this type of product are interior and exterior spaces where dust, moisture and vapor infiltration must be avoided. Applications include:

- Parking Garages, Car Washes, Shipping Docks and Outdoor Locations
- Government / Industrial Facilities, Gas Stations and Subways
- Swimming Pool Facilities, Locker / Shower Rooms
- Food and Drug Handling Areas, Public Areas and Commercial Kitchens

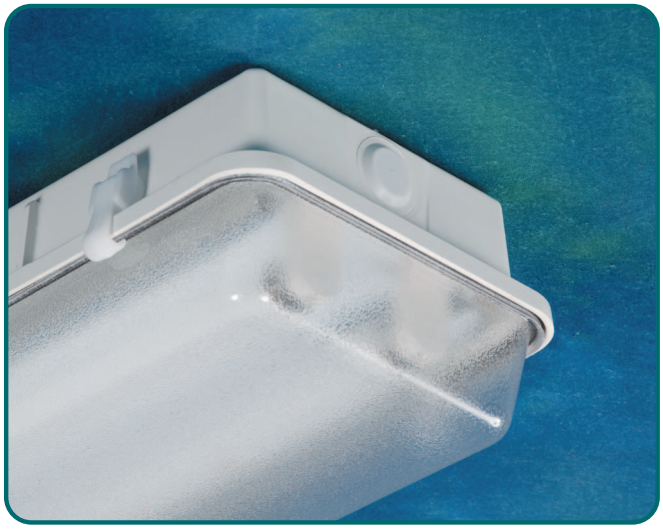

DESIGN FEATURES / SPECIFICATIONS

CONSTRUCTION
- Housing is precision injection molded from fiberglass reinforced polyester resin. Approval and / or listings as follows:
- UL/CUL/NSF International
- U.S. Department of Agriculture
- Canadian Standards Association
- Achieves IP65 / IP67 Rating (Certain models only)
- Housing matl. is self-extinguishable (ASTM D635-74)
- Internal housing and brackets to be precision die formed from 22 ga. cold rolled steel. Finish to be pre-painted gloss white polyester powder coat.

GASKETING
- New technology molecular structure gasket material is poured into pre-treated housing channel to insure stronger adhesion and to provide maximum protection against moisture and dust.

REFLECTOR
- Precision die formed optics which has been designed for maximum efficiency and photometric properties using the latest CAD software.
- Choice of optics includes focused, normal and spread beam distribution. Consult factory for custom optics design and spacing criteria options.
- Choice of materials include:
  - Alanod Miro4® Enhanced Specular Aluminum, 95% total reflectance, 25 year warranty.
  - High Reflectance White Powder Coated Aluminum, 91% total reflectance, 10 year warranty.
  - Consult factory for all other material choices.

LAMPHOLDERS
- Vossloh-Schwabe® premium type featuring:
  - Anti-vibration internal lamp locking design
  - High temperature resistant ("T" marking).
  - Heat and UV blocking shield to prevent degradation of material.
  - L/H contact design for optimum lamp pin contact.
  - Manufactured to DIN ISO 9001 and IEC standards.

BALLASTS
- All standard ballasts are electronic, energy saving, thermally protected, Class-P, non-PCB, Sound Rated "A", 0 degree (Type 1 Outdoor). Verify with factory for latest information regarding High Temperature (HT) or Extreme Low Temperature (XLT) rated ballast options.
- UL/CSA certified, where applicable. Compliant with Federal Ballast Law (Public Law 100-357, 1988).
- Choice of ballast factors. L=Low, N=Normal, H=High.
- Choice of dedicated, universal or special voltage - Consult factory for available options.
- Warranted by ballast manufacturer. Typical warranty is for 5 years (120-277v) and 3-years (347-480v). Consult factory for latest warranty information.

LATCHES
- Standard Latch - Acetal copolymer offers increased strength over conventional plastic latches.
- Stainless Steel Latch - Designed for maximum maintainability and corrosion resistance. Tamperproof screws & tool available as option.
- Additional latches to achieve IP65 and IP67 Rating. Consult factory for all available configurations.

LAMP SHIELDING (LENS)
- Clear Acrylic with an internal crepe pattern to provide general lamp obscurity. Lenses are thermoformed for precision fit.
- Smooth exterior surface for ease of cleaning.
- "HI" – High Impact "DR" Additive to resist breakage is optional.

LAMPS
- Supplied by others unless otherwise specified.
- Factory installed if required - Consult factory.
- Lamp type, CRI ratings, temperature colors, lamp life ratings are all viable options which can be supplied - Consult factory for information.

MOUNTING
- The luminaire may be surface mounted or may be suspended by pendant, threaded rod, chain or cable. (Mounting hardware supplied by others unless otherwise specified).
- Custom mounting options / accessories are available - Consult factory.

ELECTRICAL
- Luminaire is bi-national listed and labeled (UL 1598 and CSA C22.2 No. 250.0-00) and is suitable for damp locations.
- Product includes luminaire disconnect as specified in NEC 410.73(G), 2005 Edition, and CEC part I, rule 30-308(4), 2006 Edition.

QUALITY CONTROL
- All fixtures and retrofit kits are designed, fabricated, assembled and tested at RENOVA's manufacturing facility. All fixtures are 100% lamp tested, inspected and labeled prior to shipment.

GUARANTEE
- RENOVA warrants all fixtures to be free of defects in manufacturing and workmanship for a period of (1) year from date of purchase. This warranty excludes damage of any kind resulting from improper installation, misuse, abuse, accidents, mis-application, or natural disasters. Please refer to the "Terms and Conditions" section of the RENOVA website for additional information.

Note: RENOVA products are constantly being improved; therefore, the information shown is subject to change without notice. Always consult your lighting representative or RENOVA Lighting Systems, Inc. for the latest information.

RENOVA Lighting Systems, Inc. • 15 Wellstown Road • Ashaway, RI 02804 • (800) 635-6682 • www.renova.com

Category: ECS
Energy Conservation Series

Prefix:
NCI

Fixture Series (Name):
Narrow Caged Industrial

RENOVA™
Innovative Lighting Ideas
Energy Efficient Solutions

Narrow Caged Industrial Series general purpose fluorescent luminaire

GENERAL DESCRIPTION

The Narrow Caged Industrial (NCI) Series has been developed for general illumination for surface or pendant mounted applications. This series utilizes computer designed reflector technology for optimal fixture efficiency, reduction of energy consumption and improved quality of light. It also provides instant-on operation and offers many other energy saving options.

Typical applications for this type of product are interior spaces where appearance and performance are important. Applications include:

- Gymnasiums and High Abuse Fluorescent Lighting Areas
- Hospitals, Government Facilities and Military Bases
- Commercial and Institutional Facilities
- Schools, Colleges and Universities

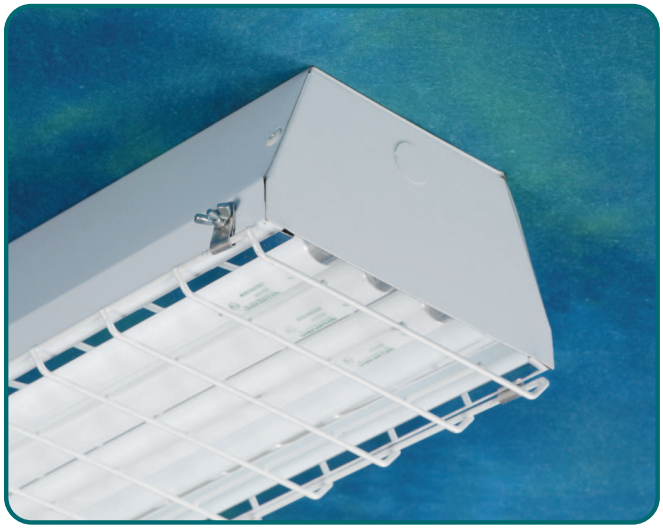

DESIGN FEATURES / SPECIFICATIONS

CONSTRUCTION
- Precision die formed from 22 ga. cold rolled steel.
- Mechanically fastened or resistance welded depending on model.
- Heavy gauge steel (CRS) or aluminum alloy may be custom ordered.
- Finish to be pre-painted gloss white polyester powder coat.
- Post-painted polyester powder coat finishes are available. Consult factory for all special colors and finishes.
- Heavy guage steel (NYC) and heavy guage aluminum are available as alternate materials.

REFLECTOR
- Precision die formed optics which has been designed for maximum efficiency and photometric properties using the latest CAD software.
- Choice of optics includes focused, normal and spread beam distribution. Consult factory for custom optics design and spacing criteria options.
- Choice of materials include:
  - Alanod Miro4® Enhanced Specular Aluminum, 95% total reflectance, 25 year warranty.
  - Enhanced Specular Aluminum, 92% total (min.) reflectance, 25 year warranty.
  - High Reflectance White Powder Coated Aluminum, 91% total reflectance, 10 year warranty.
  - Polished Aluminum, 87% total (min.) reflectance, 25 year warranty.
  - Consult factory for availability of all other material choices.

LAMPHOLDERS
- Vossloh-Schwabe® premium type featuring:
  - Anti-vibration internal lamp locking design
  - High temperature resistant ("T" marking).
  - Heat and UV blocking shield to prevent degradation of material.
  - Multi-point contact design for optimum lamp pin contact.
  - Produced in accordance with DIN ISO 9001 and IEC standards.

BALLASTS
- All standard ballasts are electronic, energy saving, thermally protected, Class-P, non-PCB, Sound Rated "A", 0 degree (Type 1 Outdoor). Verify with factory for latest information regarding High Temperature (HT) or Extreme Low Temperature (XLT) rated ballast options.
- UL/CSA certified, where applicable. Compliant with Federal Ballast Law (Public Law 100-357, 1988).
- Choice of ballast factors. L=Low, N=Normal, H=High.
- Choice of dedicated, universal or special voltage - Consult factory for available options.
- Warranted by ballast manufacturer. Typical ballast warranty is for 5 years (120-277v) and 3-years (347-480v). Consult factory for latest warranty information.

WIREGUARD
- Heavy-Duty mild steel. Mesh to be 2" square.
- Spot-welded contruction
- Finish to be polyester powder coat baked white enamel.

LAMPS
- Supplied by others unless otherwise specified.
- Factory installed if required - Consult factory.
- Lamp type, CRI ratings, temperature colors, lamp life ratings are all viable options which can be supplied - Consult factory for information.

MOUNTING
- The luminaire may be surface mounted or may be suspended by pendant, threaded rod, hook, chain or cable. (Mounting hardware supplied by others unless otherwise specified).
- Custom mounting options / accessories are available - Consult factory.

ELECTRICAL
- Luminaire is bi-national listed and labeled (UL 1598 and CSA C22.2 No. 250.0-00) and is suitable for damp locations.
- Product includes luminaire disconnect as specified in NEC 410.73(G), 2005 Edition, and CEC part I, rule 30-308(4), 2006 Edition.

QUALITY CONTROL
- All fixtures and retrofit kits are designed, fabricated, assembled and tested at RENOVA's manufacturing facility. All fixtures are 100% lamp tested, inspected and labeled prior to shipment.

GUARANTEE
- RENOVA warrants all fixtures to be free of defects in manufacturing and workmanship for a period of (1) year from date of purchase. This warranty excludes damage of any kind resulting from improper installation, misuse, abuse, accidents, mis-application, or natural disasters. Please refer to the "Terms and Conditions" section of the RENOVA website for additional information.

Note: RENOVA products are constantly being improved; therefore, the information shown is subject to change without notice. Always consult your lighting representative or RENOVA Lighting Systems, Inc. for the latest information.

Category: ECS
Energy Conservation Series

Prefix:
SGI

Fixture Series (Name):
Std. Grade Industrial

RENOVA™
Innovative Lighting Ideas
Energy Efficient Solutions

Standard Grade Industrial Series general purpose fluorescent luminaire

GENERAL DESCRIPTION

The Standard Grade Industrial (SGI) Series has been developed for general illumination for surface or pendant mounted applications. This series utilizes computer designed reflector technology for optimal fixture efficiency, reduction of energy consumption and improved quality of light. It also provides instant-on operation and offers many other energy saving options.

Typical applications for this type of product are interior spaces where appearance and performance are important. Applications include:

- Industrial, Commercial and Manufacturing Areas
- Warehouse Spaces – Isle and Open Areas
- Storage Facilities and Specialized Retail Applications
- Schools, Colleges and Universities

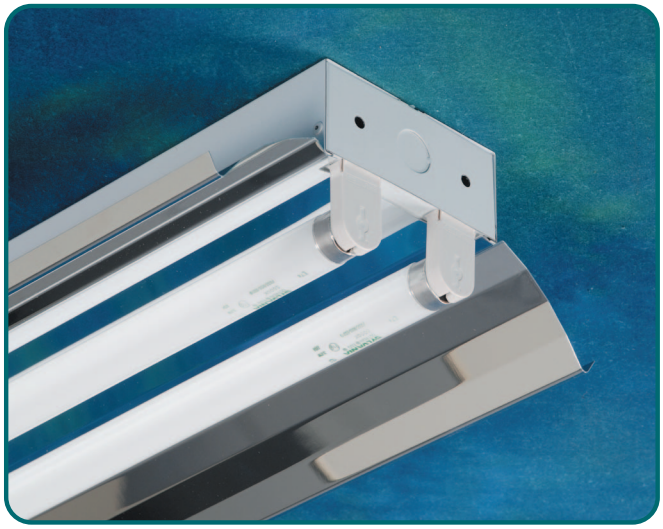

DESIGN FEATURES / SPECIFICATIONS

CONSTRUCTION
- Precision die formed from 22 ga. cold rolled steel.
- Mechanically fastened or resistance welded depending on model.
- Heavy gauge steel (CRS) or aluminum alloy may be custom ordered.
- Finish to be pre-painted gloss white polyester powder coat.
- Post-painted polyester powder coat finishes are available. Consult factory for all special colors and finishes.
- Heavy guage steel (NYC) and heavy guage aluminum are available as alternate materials.

REFLECTOR
- Precision die formed optics which has been designed for maximum efficiency and photometric properties using the latest CAD software.
- Choice of optics includes focused, normal and spread beam distribution. Consult factory for custom optics design and spacing criteria options.
- Choice of materials include:
  - Alanod Miro4® Enhanced Specular Aluminum, 95% total reflectance, 25 year warranty.
  - Enhanced Specular Aluminum, 92% total (min.) reflectance, 25 year warranty.
  - High Reflectance White Powder Coated Aluminum, 91% total reflectance, 10 year warranty.
  - Polished Aluminum, 87% total (min.) reflectance, 25 year warranty.
  - Consult factory for availability of all other material choices.

LAMPHOLDERS
- Vossloh-Schwabe® premium type featuring:
  - Anti-vibration internal lamp locking design
  - High temperature resistant ("T" marking).
  - Heat and UV blocking shield to prevent degradation of material.
  - Multi-point contact design for optimum lamp pin contact.
  - Produced in accordance with DIN ISO 9001 and IEC standards.

BALLASTS
- All standard ballasts are electronic, energy saving, thermally protected, Class-P, non-PCB, Sound Rated "A", 0 degree (Type 1 Outdoor). Verify with factory for latest information regarding High Temperature (HT) or Extreme Low Temperature (XLT) rated ballast options.
- UL/CSA certified, where applicable. Compliant with Federal Ballast Law (Public Law 100-357, 1988).
- Choice of ballast factors. L=Low, N=Normal, H=High.
- Choice of dedicated, universal or special voltage - Consult factory for available options.
- Warranted by ballast manufacturer. Typical ballast warranty is for 5 years (120-277v) and 3-years (347-480v). Consult factory for latest warranty information.

LAMPS
- Supplied by others unless otherwise specified.
- Factory installed if required - Consult factory.
- Lamp type, CRI ratings, temperature colors, lamp life ratings are all viable options which can be supplied - Consult factory for information.

MOUNTING
- The luminaire may be surface mounted or may be suspended by pendant, threaded rod, hook, chain or cable. (Mounting hardware supplied by others unless otherwise specified).
- Custom mounting options / accessories are available - Consult factory.

ELECTRICAL
- Luminaire is bi-national listed and labeled (UL 1598 and CSA C22.2 No. 250.0-00) and is suitable for damp locations.
- Product includes luminaire disconnect as specified in NEC 410.73(G), 2005 Edition, and CEC part I, rule 30-308(4), 2006 Edition.

QUALITY CONTROL
- All fixtures and retrofit kits are designed, fabricated, assembled and tested at RENOVA's manufacturing facility. All fixtures are 100% lamp tested, inspected and labeled prior to shipment.

GUARANTEE
- RENOVA warrants all fixtures to be free of defects in manufacturing and workmanship for a period of (1) year from date of purchase. This warranty excludes damage of any kind resulting from improper installation, misuse, abuse, accidents, mis-application, or natural disasters. Please refer to the "Terms and Conditions" section of the RENOVA website for additional information.

Note: RENOVA products are constantly being improved; therefore, the information shown is subject to change without notice. Always consult your lighting representative or RENOVA Lighting Systems, Inc. for the latest information.

RENOVA Lighting Systems, Inc. • 15 Wellstown Road • Ashaway, RI 02804 • (800) 635-6682 • www.renova.com

Category: ECS
Energy Conservation Series

Prefix:
SGS

Fixture Series (Name):
Std Grade Strip

RENOVA™
Innovative Lighting Ideas
Energy Efficient Solutions

Standard Grade Strip Series general purpose fluorescent luminaire

GENERAL DESCRIPTION

The Standard Grade Strip (SGS) Series has been developed for low to medium general illumination for surface or pendant mounted applications. This series utilizes computer designed reflector technology for optimal fixture efficiency, reduction of energy consumption and improved quality of light. It also provides instant-on operation and offers many other energy saving options.

Typical applications for this type of product are interior spaces where performance is important. Applications include:

- Commercial, Retail and Manufacturing
- Coves and Valance Lighting Application
- Backlighting used for Displays and Interior Signage
- Schools, Colleges and Universities

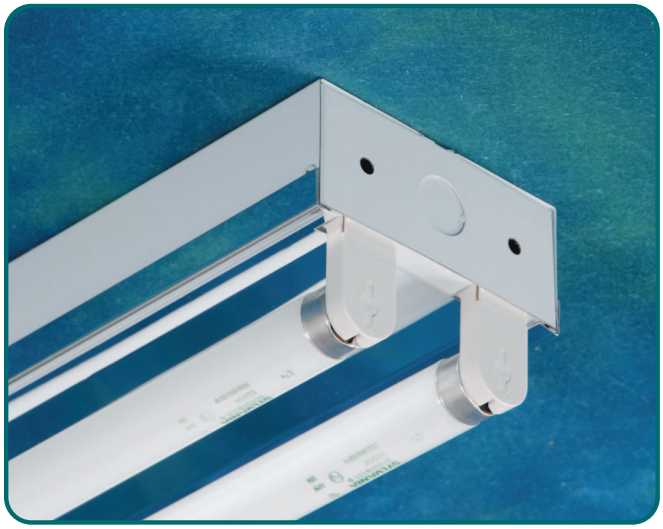

DESIGN FEATURES / SPECIFICATIONS

CONSTRUCTION
- Precision die formed from 22 ga. cold rolled steel.
- Mechanically fastened or resistance welded depending on model.
- Heavy gauge steel (CRS) or aluminum alloy may be custom ordered.
- Finish to be pre-painted gloss white polyester powder coat.
- Post-painted polyester powder coat finishes are available. Consult factory for all special colors and finishes.
- Heavy guage steel (NYC) and heavy guage aluminum are available as alternate materials.

REFLECTOR
- Precision die formed optics which has been designed for maximum efficiency and photometric properties using the latest CAD software.
- Choice of optics includes focused, normal and spread beam distribution. Consult factory for custom optics design and spacing criteria options.
- Choice of materials include:
  - Alanod Miro4® Enhanced Specular Aluminum, 95% total reflectance, 25 year warranty.
  - Enhanced Specular Aluminum, 92% total (min.) reflectance, 25 year warranty.
  - High Reflectance White Powder Coated Aluminum, 91% total reflectance, 10 year warranty.
  - Polished Aluminum, 87% total (min.) reflectance, 25 year warranty.
  - Consult factory for availability of all other material choices.

LAMPHOLDERS
- Vossloh-Schwabe® premium type featuring:
  - Anti-vibration internal lamp locking design
  - High temperature resistant ("T" marking).
  - Heat and UV blocking shield to prevent degradation of material.
  - Multi-point contact design for optimum lamp pin contact.
  - Produced in accordance with DIN ISO 9001 and IEC standards.

BALLASTS
- All standard ballasts are electronic, energy saving, thermally protected, Class-P, non-PCB, Sound Rated "A", 0 degree (Type 1 Outdoor). Verify with factory for latest information regarding High Temperature (HT) or Extreme Low Temperature (XLT) rated ballast options.
- UL/CSA certified, where applicable. Compliant with Federal Ballast Law (Public Law 100-357, 1988).
- Choice of ballast factors. L=Low, N=Normal, H=High.
- Choice of dedicated, universal or special voltage - Consult factory for available options.
- Warranted by ballast manufacturer. Typical ballast warranty is for 5 years (120-277v) and 3-years (347-480v). Consult factory for latest warranty information.

LAMPS
- Supplied by others unless otherwise specified.
- Factory installed if required - Consult factory.
- Lamp type, CRI ratings, temperature colors, lamp life ratings are all viable options which can be supplied - Consult factory for information.

MOUNTING
- The luminaire may be surface mounted or may be suspended by pendant, threaded rod, hook, chain or cable. (Mounting hardware supplied by others unless otherwise specified).
- Custom mounting options / accessories are available - Consult factory.

ELECTRICAL
- Luminaire is bi-national listed and labeled (UL 1598 and CSA C22.2 No. 250.0-00) and is suitable for damp locations.
- Product includes luminaire disconnect as specified in NEC 410.73(G), 2005 Edition, and CEC part I, rule 30-308(4), 2006 Edition.

QUALITY CONTROL
- All fixtures and retrofit kits are designed, fabricated, assembled and tested at RENOVA's manufacturing facility. All fixtures are 100% lamp tested, inspected and labeled prior to shipment.

GUARANTEE
- RENOVA warrants all fixtures to be free of defects in manufacturing and workmanship for a period of (1) year from date of purchase. This warranty excludes damage of any kind resulting from improper installation, misuse, abuse, accidents, mis-application, or natural disasters. Please refer to the "Terms and Conditions" section of the RENOVA website for additional information.

Note: RENOVA products are constantly being improved; therefore, the information shown is subject to change without notice. Always consult your lighting representative or RENOVA Lighting Systems, Inc. for the latest information.

RENOVA Lighting Systems, Inc. • 15 Wellstown Road • Ashaway, RI 02804 • (800) 635-6682 • www.renova.com

Category: ECS
Energy Conservation Series

Prefix:
RGT

Fixture Series (Name):
Rec. General Troffer

RENOVA™
Innovative Lighting Ideas
Energy Efficient Solutions

Recessed General Troffer Series general purpose fluorescent luminaire

GENERAL DESCRIPTION

The Recessed General Troffer (RGT) Series has been developed for general illumination for recessed T-Bar grid applications. This series utilizes computer designed reflector technology for optimal fixture efficiency, reduction of energy consumption and improved quality of light. It also provides instant-on operation and offers many other energy saving options.

Typical applications for this type of product are interior spaces where finished T-Bar grid ceilings exist. Applications include:

- Commercial / Corporate Office Spaces
- Hospitals, Government Facilities and Military Bases
- Retail Spaces, Schools, Colleges and Universities
- All General Illumination Indoor Applications

DESIGN FEATURES / SPECIFICATIONS

CONSTRUCTION
- Precision die formed from 22 ga. cold rolled steel.
- Mechanically fastened.
- Finish to be pre-painted gloss white polyester powder coat.

REFLECTOR
- Precision die formed optics which has been designed for maximum efficiency and photometric properties using the latest CAD software.
- Choice of optics includes focused, normal and spread beam distribution. Consult factory for custom optics design and spacing criteria options.
- Choice of materials include:
  - Alanod Miro4® Enhanced Specular Aluminum, 95% total reflectance, 25 year warranty.
  - Enhanced Specular Aluminum, 92% total (min.) reflectance, 25 year warranty.
  - High Reflectance White Powder Coated Aluminum, 91% total reflectance, 10 year warranty.
  - Polished Aluminum, 87% total (min.) reflectance, 25 year warranty.
  - Consult factory for availability of all other material choices.

LAMPHOLDERS
- Vossloh-Schwabe® premium type featuring:
  - Anti-vibration internal lamp locking design
  - High temperature resistant ("T" marking).
  - Heat and UV blocking shield to prevent degradation of material.
  - Multi-point contact design for optimum lamp pin contact.
  - Produced in accordance with DIN ISO 9001 and IEC standards.

BALLASTS
- All standard ballasts are electronic, energy saving, thermally protected, Class-P, non-PCB, Sound Rated "A", 0 degree (Type 1 Outdoor). Verify with factory for latest information regarding High Temperature (HT) or Extreme Low Temperature (XLT) rated ballast options.
- UL/CSA certified, where applicable. Compliant with Federal Ballast Law (Public Law 100-357, 1988).
- Choice of ballast factors. L=Low, N=Normal, H=High.
- Choice of dedicated, universal or special voltage - Consult factory for available options.
- Warranted by ballast manufacturer. Typical ballast warranty is for 5 years (120-277v) and 3-years (347-480v). Consult factory for latest warranty information.

LAMPS
- Supplied by others unless otherwise specified.
- Factory installed if required - Consult factory.
- Lamp type, CRI ratings, temperature colors, lamp life ratings are all viable options which can be supplied - Consult factory for information.

LAMP SHIELDING
- Lamp shielding options include:
  - Heavy duty powder coated or zinc-plated wire guards.
  - Flat or drop dish lenses, clear acrylic, clear polycarbonate, high light transmission white, prismatic and linear prism lenses. Consult factory for all available options.
  - Louvers and cross-blade baffles - Consult factory.

MOUNTING
- The luminaire is designed to be mounted in a standard T-Bar ceiling grid. Integral T-Bar safety clips are standard – no need to install separate clips.

ELECTRICAL
- Luminaire is bi-national listed and labeled (UL 1598 and CSA C22.2 No. 250.0-00) and is suitable for damp locations.
- Product includes luminaire disconnect as specified in NEC 410.73(G), 2005 Edition, and CEC part I, rule 30-308(4), 2006 Edition.

QUALITY CONTROL
- All fixtures and retrofit kits are designed, fabricated, assembled and tested at RENOVA's manufacturing facility. All fixtures are 100% lamp tested, inspected and labeled prior to shipment.

GUARANTEE
- RENOVA warrants all fixtures to be free of defects in manufacturing and workmanship for a period of (1) year from date of purchase. This warranty excludes damage of any kind resulting from improper installation, misuse, abuse, accidents, mis-application, or natural disasters. Please refer to the "Terms and Conditions" section of the RENOVA website for additional information.

Note: RENOVA products are constantly being improved; therefore, the information shown is subject to change without notice. Always consult your lighting representative or RENOVA Lighting Systems, Inc. for the latest information.

LED EXIT SIGN

EXIT

SUBMITTAL:

JOB:

TYPE: **VOLTAGE:**

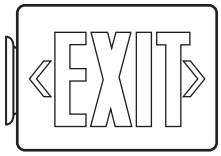

EXAMPLE: **EXIT - R - EM - WHT - OPTIONS**

EXIT	R	EM	WHT	OPTIONS
SERIES	LETTER COLOR	POWER OPTIONS	HOUSING COLOR	OPTIONS/ ACCESSORIES

SERIES

FEATURES

- Available as full-time AC powered unit or emergency unit with battery backup.
- LED lamp life of 25 years.
- Provided as universal single face/double face unit.
- Ni-Cad battery on emergency (EM) units provides 90 minutes of emergency operation.
- Automatic, low voltage disconnect (LVD) activates EM unit in event of partial power failure or brownout.
- Universal mounting canopy for top or side installation.
- Energy consumption of 3.2 watts for red letters and 3.8 watts for green letters.
- Charge rate/power on LED indicator light.
- Removable directional indicators.
- Available with industry-standard white or black housing.

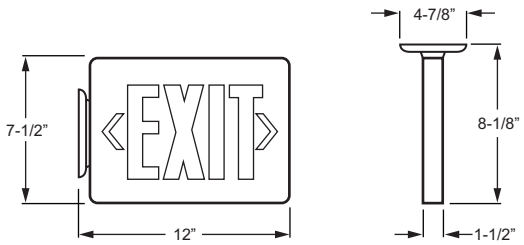

LETTER COLOR (Must specify)

R	Red	**G**	Green

POWER OPTIONS (Must specify)

AC	AC operation	**EM**	AC operation with Emergency Battery Backup

HOUSING COLOR (Must specify)

BLK	Black	**WHT**	Industry-standard White

OPTIONS

DC	Dual Circuit
SDT	Self-Diagnostic Test
SALIDA	Salida Faceplate (Industry-standard White only)
COPY	Consult factory for custom message

ACCESSORIES

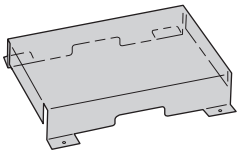

PC1
Polycarbonate Shield

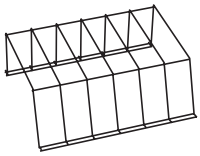

WG
Wireguard

EXIT SERIES

HOUSING — Injection-molded, VO flame retardant, high-impact thermoplastic housing.

ELECTRICAL — Universal transformer for 120 or 277 VAC operation.

MOUNTING — Universal mounting canopy included for top or side installation.

LABELS

Listed to UL 924 standard as an exit light suitable for dry or damp location.

CR6™
Six-Inch LED Downlight

Product Description

The CR6™ LED downlight delivers 575 lumens of exceptional 90+ CRI light while achieving over 60 lumens per watt. This breakthrough performance is achieved by combining the high efficacy and high-quality light of Cree TrueWhite® Technology. The CR6 is available in a warm color temperature and has a variety of trim options. It easily installs into most standard six-inch recessed IC or non-IC housings, making the CR6 perfect for use in both residential and light commercial, new construction or retrofit, applications.

Performance Summary

- Utilizes Cree TrueWhite® Technology
- Active Color Management
- **Delivered Light Output**: 575 lumens
- **Input Power**: 9.5 watts
- **CRI**: 90
- **CCT**: 2700K
- **Warranty**: 5 years
- **Lifetime**: Designed to last 50,000 hours
- **Dimming**: Dimmable to 5%*

Ordering Information

Example: CR6

Product
CR6 Edison Base
CR6-GU24 GU24 Base

Housings & Accessories

Reference Housing & Accessory documents for more details.

Trims & Reflectors
CT6A Diffuse anodized finish reflector
CT6AW Wheat diffuse anodized finish reflector
CT6AB Black diffuse anodized finish reflector
CT6BB Flat black finish trim and reflector

Housings (Edison or GU24)	
H6 Architectural	**SC6** Cylindrical Surface Mount
RC6 New Construction	**SC6-CM** Cylindrical Cord Mount
RR6 Retrofit	**SC6-WM** Cylindrical Wall Mount

* Reference CreeLEDLighting.com for recommended dimmers.

CR6

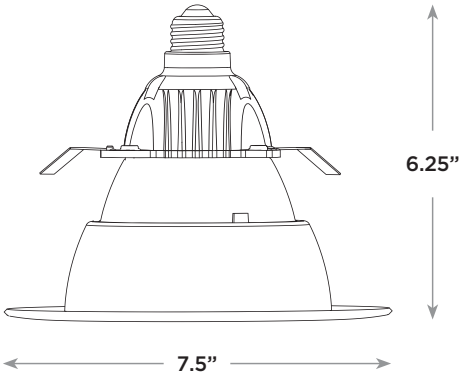

EnduraLED MR16

EnduraLED MR16 10W 2700K 12V Dimm

Philips EnduraLED MR16 Lamps provide ambient level light to illuminate hard to maintain applications. Increased transformer compatability allows for operation on a wider range of transformers. Available in flood and spot versions, these lamps are ideal for track and open recessed fixtures in rooms, hallways, lobbies and retail displays.

Product data

• Product Data

Order code	929000174104
Full product code	929000174104
Full product name	EnduraLED MR16 10W 2700K 12V Dimm
Order product name	12V EnduraLED 10W MR16 24D 2700K dimmabl
Pieces per pack	1
Packing configuration	10
Packs per outerbox	10
Bar code on pack - EAN1	46677410056
Bar code on outerbox - EAN3	50046677410051
Logistic code(s) - 12NC	929000174104
Net weight per piece	0.045 kg

• General Characteristics

Cap-Base	GU5.3
Bulb	MR16 [MR 16inch/50mm]
Average Lifetime	25000 hr

• Electrical Characteristics

Wattage	10 W
Wattage Technical	10.0 W
Voltage	12 V
Power Factor	0.8 -
Lamp Current mA	980 mA
Dimmable	Yes

• Light Technical Characteristics

Color Code	WW
Color Designation (text)	Warm White
Beam Angle	24 D
Correlated Color Temperature	2700 K
Luminous Intensity	1700 cd
Color rendering index	80
Color Temperature	2700 K [CCT 2700K]

• Product Dimensions

Diameter D	50 mm
Overall Length C	53.7 mm

PHILIPS

sense and simplicity

ESSENTIALS™ BAY SERIES v 2.0

4 LED MODULES (4M) FIXTURE OVERVIEW

TYPE

(Fixture shown with optional integrated occupancy sensor.)

ABOUT THE LUSIO ESSENTIALS BAY SERIES

The Lusio Essentials Bay Series is a family of high efficacy LED fixtures engineered to maximize performance and value. Essentials version 2.0 is introduced with the latest LED technology sorted to provide the same industry leading efficacy at 4000K or 5000K color temperatures. Separated finned aluminum heat sinks are designed to promote heat transfer from the LEDs by allowing air to pass. This keeps the LEDs cool so their useful life is extended. Ideally suited for one-for-one replacement of traditional fluorescent and HID light sources or new construction projects, the Lusio Essentials Bay Series can significantly reduce lighting costs and provide a very attractive return on investment. The Lusio Essentials Bay Series is backed by a 7-year warranty.

ESSENTIALS 4M FIXTURE DESCRIPTION

With a nominal 14-inch x 4-foot modular form, the Lusio Essentials Bay Series 4M fixture is equivalent in light output to 6-lamp T5HO fluorescent or 400W metal halide light fixtures and reduces power consumption by 40-53% to meet strict energy codes.

FIXTURE PERFORMANCE

	WATTAGE[1]	LUMENS[1]	EFFICACY[1]	CRI[2]
NL-BAFN: NO LENS, NO BAFFLE				
4000K/5000K	222	24,300	109.5	75
NL-BAFY: NO LENS WITH BAFFLE				
4000K/5000K	222	23,500	105.9	75
CA-BAFN: CLEAR ACRYLIC LENS, NO BAFFLE				
4000K/5000K	222	23,300	105.0	75
CA-BAFY: CLEAR ACRYLIC LENS WITH BAFFLE				
4000K/5000K	222	23,200	104.5	75
FP-BAFN: FROSTED POLYCARBONATE LENS, NO BAFFLE				
4000K/5000K	222	21,900	98.6	75

[1] Typical at 120V and 25°C (77°F). [2] Typical CRI. [3] Consult factory for other CCT offerings. Lead times may be longer.

DIMENSIONS

INS (CMS) • LBS (KGS)

LENGTH [1]	WIDTH [1]	DEPTH [1]	WEIGHT	WEIGHT WITH BATTERY BACKUP
43-5/8 (110.8)	14 (35.6)	2-1/4 (5.7)	18 (8.1)	22 (9.9)

[1] Dimensions listed are for the fixture only. See dimensional drawings for measurements with mounting hardware.

POWER FACTOR

120V	0.997
277V	0.952
347V	0.988
480V	0.969

TOTAL HARMONIC DISTORTION

120V	6.5%
277V	11.9%
347V	10.3%
480V	10.8%

FEATURES

POWER AND CONTROL

- **POWER INPUT:** 100-277V or 347-480V (50/60 hz)
- **DIMMING:** Optional factory installed dimmable power supply (10-100% dimming) interfaces with standard third party 0-10V dimmers.
- **SENSORS:** Optional on-board, factory installed occupancy sensors available. See Lusio Accessories sheet for more information.
- **EMERGENCY BATTERY BACK-UP:** For 120-277V fixtures only, optional on-board, factory installed battery back-ups are available that produce 1,900-2,100 lumens for a minimum of 90 minutes.

LUMEN MAINTENANCE

- **L70 LIFE:** 90% lumen maintenance at 70,000 hours (77°F/25°C ambient); L70 predicted life is more than 200,000 hours

LISTINGS AND CERTIFICATIONS

- UL | CUL listed for safety (1598)
- UL | CUL dry/damp location listed
- RoHS compliant
- FCC Class B
- Lighting Facts (U.S. Department of Energy) certified
- DesignLights™ Consortium approved

FIXTURE

- **ENVIRONMENT:** Dry/damp locations. For interior applications.
- **HEAT SINKS:** Extruded aluminum heat sinks provide optimal thermal management, decreasing LED junction temperature and ensuring long life.
- **POWER SUPPLY ACCESS:** Center channel cover is hinged for easy access to power supplies and quick wiring.
- **OPTICS:** Two highly reflective white coated optics are available to enhance light output and reduce glare.
- **LENSES:** Recommended UV stable clear acrylic or frosted polycarbonate. Also available without a lens. Consult acrylic/polycarbonate chemical resistance chart for guidance in selecting the appropriate lensing material for your application.
- **WIRE GUARDS:** Optional wire guards can be field installed. See Lusio Accessories sheet for more information.
- **WARRANTY:** Limited 7-year warranty. See complete warranty coverage and exclusions details at LusioLighting.com.
- **REPLACEABLE LED LIGHT MODULES:** Allows field replacement of individual light modules.
- **AMBIENT OPERATING TEMPERATURES**

  Cable, Loop/Hook, and Stem Mounted Fixtures

  -31° to 131°F (-35° to 55°C)

  Fixtures with Emergency Battery Back-ups and All Surface Mounted Fixtures

  -31° to 122°F (-35° to 50°C)

PHOTOMETRIC AND DISTRIBUTION DATA IS TYPICAL FOR THIS FIXTURE. PERFORMANCE WILL VARY DEPENDING ON LED AND POWER SUPPLY. THIS FIXTURE IS MANUFACTURED TO AN OVERALL PERFORMANCE TOLERANCE OF +/- 6%.

Copyright © 2013. LightWild, Inc. Lusio Commerical & Industrial Lighting is a brand of LightWild. All rights reserved. 071713-1.
All specifications subject to change without notice. Visit www.LusioLighting.com for updates.

ESSENTIALS™ BAY SERIES v 2.0

6 LED MODULES (6M) FIXTURE OVERVIEW

TYPE

ABOUT THE LUSIO ESSENTIALS BAY SERIES

The Lusio Essentials Bay Series is a family of high efficacy LED fixtures engineered to maximize performance and value. Essentials version 2.0 is introduced with the latest LED technology sorted to provide the same industry leading efficacy at 4000K or 5000K color temperatures. Separated finned aluminum heat sinks are designed to promote heat transfer from the LEDs by allowing air to pass. This keeps the LEDs cool so their useful life is extended. Ideally suited for one-for-one replacement of traditional fluorescent and HID light sources or new construction projects, the Lusio Essentials Bay Series can significantly reduce lighting costs and provide a very attractive return on investment. The Lusio Essentials Bay Series is backed by a 7-year warranty.

ESSENTIALS 6M FIXTURE DESCRIPTION

With a nominal 18-inch x 4-foot modular form, the Lusio Essentials Bay Series 6M fixture is equivalent in light output to a 750W metal halide fixture, outperforms an 8-lamp T5HO by 25%, and reduces power consumption by 31-60% to meet strict energy codes.

FIXTURE PERFORMANCE

	WATTAGE[1]	LUMENS[1]	EFFICACY[1]	CRI[2]
NL-BAFN: NO LENS, NO BAFFLE				
4000K/5000K[3]	335	36,100	107.8	75
NL-BAFY: NO LENS WITH BAFFLE				
4000K/5000K[3]	335	34,900	104.2	75
CA-BAFN: CLEAR ACRYLIC LENS, NO BAFFLE				
4000K/5000K[3]	335	34,700	103.6	75
CA-BAFY: CLEAR ACRYLIC LENS WITH BAFFLE				
4000K/5000K[3]	335	34,400	102.7	75
FP-BAFN: FROSTED POLYCARBONATE LENS, NO BAFFLE				
4000K/5000K[3]	335	32,500	97.0	75

[1] Typical at 120V and 25°C (77°F). [2] Typical CRI. [3] Consult factory for other CCT offerings. Lead times may be longer.

DIMENSIONS

INS (CMS) • LBS (KGS)

LENGTH [1]	WIDTH [1]	DEPTH [1]	WEIGHT	WEIGHT WITH BATTERY BACKUP
43-5/8 (110.8)	18-3/4 (47.6)	2-1/4 (5.7)	24 (10.9)	28 (12.7)

[1] Dimensions listed are for the fixture only. See dimensional drawings for measurements with mounting hardware.

POWER FACTOR

120V	0.997
277V	0.952
347V	0.988
480V	0.969

TOTAL HARMONIC DISTORTION

120V	6.5%
277V	11.9%
347V	10.3%
480V	10.8%

FEATURES

POWER AND CONTROL

- **POWER INPUT:** 100-277V or 347-480V (50/60 hz)
- **DIMMING:** Optional factory installed dimmable power supply (10-100% dimming) interfaces with standard third party 0-10V dimmers.
- **SENSORS:** Optional on-board, factory installed occupancy sensors available. See Lusio Accessories sheet for more information.
- **EMERGENCY BATTERY BACK-UP:** For 120-277V fixtures only, optional on-board, factory installed battery back-ups are available that produce 1,900-2,100 lumens for a minimum of 90 minutes.

LUMEN MAINTENANCE

- **L70 LIFE:** 90% lumen maintenance at 70,000 hours (77°F/25°C ambient); L70 predicted life is more than 200,000 hours

LISTINGS AND CERTIFICATIONS

- UL | CUL listed for safety (1598)
- UL | CUL dry/damp location listed
- RoHS compliant
- FCC Class B
- Lighting Facts (U.S. Department of Energy) certified
- DesignLights™ Consortium approved

FIXTURE

- **ENVIRONMENT:** Dry/damp locations. For interior applications.
- **HEAT SINKS:** Extruded aluminum heat sinks provide optimal thermal management, decreasing LED junction temperature and ensuring long life.
- **POWER SUPPLY ACCESS:** Center channel cover is hinged for easy access to power supplies and quick wiring.
- **OPTICS:** Two highly reflective white coated optics are available to enhance light output and reduce glare.
- **LENSES:** Recommended UV stable clear acrylic or frosted polycarbonate. Also available without a lens. Consult acrylic/polycarbonate chemical resistance chart for guidance in selecting the appropriate lensing material for your application.
- **WIRE GUARDS:** Optional wire guards can be field installed. See Lusio Accessories sheet for more information.
- **WARRANTY:** Limited 7-year warranty. See complete warranty coverage and exclusions details at www.LusioLighting.com.
- **REPLACEABLE LED LIGHT MODULES:** Allows field replacement of individual light modules.
- **AMBIENT OPERATING TEMPERATURES**

  Cable, Loop/Hook, and Stem Mounted Fixtures

  -31° to 131°F (-35° to 55°C)

  Fixtures with Emergency Battery Back-ups and All Surface Mounted Fixtures

  -31° to 122°F (-35° to 50°C)

PHOTOMETRIC AND DISTRIBUTION DATA IS TYPICAL FOR THIS FIXTURE. PERFORMANCE WILL VARY DEPENDING ON LED AND POWER SUPPLY. THIS FIXTURE IS MANUFACTURED TO AN OVERALL PERFORMANCE TOLERANCE OF +/- 6%.

Copyright © 2013. LightWild, Inc. Lusio Commerical & Industrial Lighting is a brand of LightWild. All rights reserved. 071713-1.
All specifications subject to change without notice. Visit www.LusioLighting.com for updates.

VXBRLED13DG

High performance, wall mount LED Vaporproof fixture. A classic design with cutting edge LED technology. Comes with die cast guard and frosted globe.

Color: Natural

Weight: 5.0 lbs

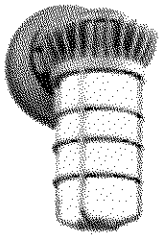

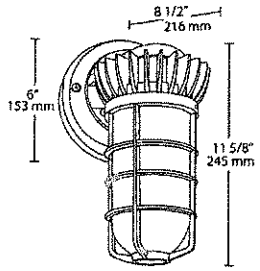

LED Info

Watts:	13W
Color Temp:	5000K (Cool)
Color Accuracy:	65
L70 Lifespan:	100000
LM79 Lumens:	729
Efficacy:	48 LPW

Driver Info

Type:	Constant Current
120V:	0.13 A
208V:	0.08 A
240V:	0.07 A
277V:	0.06 A
Input Watts:	15W
Efficiency:	86%

Technical Specifications

Lumen Maintenance:
100,000-hour LED lifespan based on IES LM-80 results and TM-21 calculations.

Fixture Efficacy:
48 Lumens per Watt

Globes and Guards:
Vaporproof LEDs are compatible with RAB Globes and Guards.

Color Accuracy:
65 CRI

Color Temperature (Nominal CCT):
5000K

Driver:
Multi-chip single 13W high output long life LED Driver. Constant Current,100V-277V, 50/60 Hz., 100-240VAC .3-.15 Amps 277VAC .15 Amps. Will deliver 70% of its initial lumens at 100,000 hours based on LM-80 Tests.

Construction:
Die cast aluminum housing and door. Tether connects back housing halves for safety.

Thermal Management (Patent Pending):
Die cast aluminum LED housing designed for maximum heat dissipation.

Surge Protection:
4KV

Housing:
Die cast aluminum housing and driver housing.

Mounting:
Three 1/2" NPS conduit entry points.

Guard and Globe:
Shot blasted guard with frosted globe.

Reflector:
High quality hydroformed semi-specular aluminum.

Gaskets:
High Temperature Silicone.

Finish:
Natural shot blasted aluminum.

Equivalency:
The VXBRLED13 is Equivalent in delivered lumens to a 60W Incandescent or 23W CFL.

HID Replacement Range:
The VXBRLED13 can be used to replace 13-23W CFL or 25-60W Incandescent Vaporproofs based on delivered lumens.

Green Technology:
Mercury and UV free.

IESNA LM-79 & IESNA LM-80 Testing:
RAB LED luminaires have been tested by an independent laboratory in accordance with IESNA LM-79 and 80, and have received the Department of Energy "Lighting Facts" label.

Color Consistency:
3-step MacAdam Ellipse binning to achieve consistent fixture-to-fixture color.

Color Stability:
LED color temperature is warrantied to shift no more than 200K in CCT over a 5 year period.

Copyright ©2013 RAB Lighting, Inc. All Rights Reserved

LTH

JOB NAME:

FIXTURE TYPE:

LED TRACK HEAD

FEATURES

- Available in 20 watt LED
- LED technology offers an unprecedented 80,000 hour lamp life. This fixture is virtually maintenance-free.
- Engineered for illumination of retail displays or any area where high efficiency and color rendering are desired.
- Designed to replace 35-150 watt fixtures which are commonly used for retail and display applications.
- Available with four different track adaptors to fit most existing line voltage systems.
- Also available with stand alone mono point mounting canopy.
- Controllable with optional occupancy sensors.

SPECIFICATIONS

- **HOUSING**
  Heavy aluminum alloy housing provides durability and maximum heat sinking for longer life of electronic components.
- **ELECTRICAL**
  Highest quality driver, emitters and power supply for long life.
- **LED COLOR**
  Available in a variety of Kelvin temperatures
  Cool White in 5000K, 65000K & 7000K
  Warm White in 2750K, 3000K, 3500K & 4200K.
- **OPTICS**
  Available in 3 beam patterns: Spot, Medium, or Flood.
- **FINISH**
  Exterior housing is finished in architectural bronze as standard. Available in gloss white.
- **CERTIFICATION**
  CSA & UL Listed.

RLE Industries • 35 Kulick Road • Fairfield, NJ 07004 • Phone: (973) 276-1444 • Fax: (973) 276-1453

ECM 2:
Lighting Controls

ECM Overview

Ameresco proposes to install new lighting controls in the Wayne, NJ PS buildings to ensure that lighting does not operate unnecessarily. Energy waste occurs when a fixture is energized but not used and when illuminance exceeds what is necessary for task performance. Ameresco noted many occupants are not careful about turning off lights when they leave the room, making automated controls advantageous.

Ameresco has proposed occupancy sensors to be installed in many classrooms, offices, and bathrooms, plus a number of facility-specific control strategies.

Figure 2.1:.Wireless controls offer occupancy control of classroom with spline or hard ceilings and provide substantial energy savings.

ECM Detail

Existing System

- *General Information about the Existing System at All Sites*

The majority of existing lighting controls are standard toggle style switches, but we noted some locations have existing occupancy sensors. For example, classrooms in Anthony Wayne Middle School, Wayne Hills High School, Wayne Valley High School are using ceiling-mounted, dual-technology occupancy sensors.

Proposed System

- *General Information about the Proposed System*

Project wide, Ameresco will install almost 2,938 local lighting controls employing a variety of strategies, each of which was customized to the unique space. We selected appropriate areas that contain several controllable fixtures, which have intermittent occupancy, and where a safety hazard will not be created if the sensor inadvertently turns the lights off. Applicable areas include classrooms, offices, baths, and the cafeteria.

Bathrooms or other areas without direct line-of-sight to the sensor, will receive dual-technology sensors that "listen" for activity in addition to "looking" for motion.

The fluorescent high-bays in gyms will have motion sensors, allowing each one to operate independently for maximum savings and flexibility.

"Page content is subject to Confidentiality Restrictions"

For some mechanical spaces, programmable timers will be installed. Staff will simply push the button to receive a preset amount of time. They can see the time running as it counts down on the display. Before the time runs out, the lights will flash, indicating that the occupant has a few minutes before the timer automatically turns off the lights.

TIMERS

For the Library, programmable timers will be installed on the Media stacks. Students seeking materials on a given shelf will simply push the button to receive a preset amount of time. They can see the time running as it counts down on the display. When the time runs out, the lights automatically turn off. No safety hazard would exist because the area still has general lighting fixtures.

- *Specific Information about the Proposed System, by Building*

Below is a brief description of some of the work to be accomplished. Please refer to the "Lighting System Analysis" in Appendix I, as this is a complete list of work to be performed.

- **Randall Carter-Elementary School:** Wireless occupancy controls will be installed in classrooms, in offices. A timer will be installed in baths, in storage areas, in kitchens, in auditoriums, in offices, in mechanical areas. Wall mounted occupancy controls will be installed in baths, in storage areas, in offices, in classrooms, in halls. Occupancy controls will be incorporated into each fixture in gyms. Ceiling mounted occupancy controls will be installed in classrooms.
- **Theunis Dey-Elementary School**: Wireless occupancy controls will be installed in classrooms, in offices, in storage areas. A timer will be installed in baths, in auditoriums, in halls. Ceiling mounted occupancy controls will be installed in classrooms, in offices, in gyms, in storage areas. Ceiling mounted dual technology occupancy controls will be installed in baths. Wall mounted occupancy controls will be installed in offices, in storage areas, in mechanical areas, in baths.
- **James Fallon-Elementary School:** A timer will be installed in classrooms, in baths, in halls, in mechanical areas, in storage areas. Ceiling mounted occupancy controls will be installed in classrooms, in offices, in storage areas. Wall mounted occupancy controls will be installed in classrooms, in storage areas, in offices, in baths. Occupancy controls will be incorporated into each fixture in gyms. Ceiling mounted dual technology occupancy controls will be installed in baths.
- **John F. Kennedy-Elementary School:** Ceiling mounted occupancy controls will be installed in classrooms, in offices, in halls. A timer will be installed in baths, in offices. Wall mounted occupancy controls will be installed in baths, in storage areas. Occupancy controls will be incorporated into each fixture in gyms. Ceiling mounted dual technology occupancy controls will be installed in baths.

- **Lafayette-Elementary School:** Occupancy controls will be incorporated into each fixture in gyms. Wireless occupancy controls will be installed in classrooms, in libraries, in cafeterias, in offices, in storage areas. Wall mounted occupancy controls will be installed in storage areas, in offices, in baths, in kitchens, in mechanical areas. Ceiling mounted occupancy controls will be installed in classrooms, in offices. A timer will be installed in baths, in kitchens, in mechanical areas, in storage areas, in offices. Ceiling mounted dual technology occupancy controls will be installed in baths. Daylight harvesting controls will be installed in halls.

- **Packanack-Elementary School:** Wireless occupancy controls will be installed in classrooms, in offices, in halls. Ceiling mounted occupancy controls will be installed in classrooms, in libraries, in gyms, in offices, in halls. Wall mounted occupancy controls will be installed in baths, in storage areas, in offices. A timer will be installed in baths, in storage areas. Ceiling mounted dual technology occupancy controls will be installed in baths.

- **Pines Lake-Elementary School:** Ceiling mounted occupancy controls will be installed in classrooms, in offices. Wireless occupancy controls will be installed in classrooms, in halls, in cafeterias, in offices. Wall mounted occupancy controls will be installed in baths, in storage areas, in mechanical areas, in halls, in offices. Occupancy controls will be incorporated into each fixture in gyms. Daylight harvesting controls will be installed in halls. A timer will be installed in mechanical areas, in storage areas. Ceiling mounted dual technology occupancy controls will be installed in baths.

- **Ryerson-Elementary School:** Wireless occupancy controls will be installed in classrooms, in offices, in baths. A timer will be installed in baths, in storage areas, in mechanical areas, in kitchens, in offices. Occupancy controls will be incorporated into each fixture in gyms. Wall mounted occupancy controls will be installed in storage areas, in baths, in offices. Ceiling mounted occupancy controls will be installed in classrooms, in offices, in libraries, in cafeterias.

- **Albert Payson Terhune-Elementary School:** A timer will be installed in baths, in mechanical areas, in halls, in storage areas, in offices. Wireless occupancy controls will be installed in classrooms, in offices. Occupancy controls will be incorporated into each fixture in gyms. Wall mounted occupancy controls will be installed in baths, in storage areas, in offices. Ceiling mounted occupancy controls will be installed in classrooms, in offices, in halls. Ceiling mounted dual technology occupancy controls will be installed in baths.

"Page content is subject to Confidentiality Restrictions"

- **Anthony Wayne-Middle School:** Occupancy controls will be incorporated into each fixture in gyms. Daylight harvesting controls will be installed in halls. A timer will be installed in offices, in storage areas. Ceiling mounted occupancy controls will be installed in baths. Automated controls are already being used in storage areas, in classrooms, in baths, in offices, in halls.
- **Schuyler-Colfax-Middle School:** Occupancy controls will be incorporated into each fixture in gyms, in offices. Wall mounted occupancy controls will be installed in storage areas, in offices, in baths, in halls, in classrooms, in kitchens, in mechanical areas. Ceiling mounted occupancy controls will be installed in classrooms, in offices, in cafeterias, in libraries, in storage areas. Wireless occupancy controls will be installed in classrooms, in offices. Ceiling mounted dual technology occupancy controls will be installed in baths. A timer will be installed in storage areas, in halls, in mechanical areas, in classrooms.
- **George Washington-Middle School:** Daylight harvesting controls will be installed in halls. Wall mounted occupancy controls will be installed in storage areas, in offices, in baths, in halls, in mechanical areas. Ceiling mounted occupancy controls will be installed in classrooms, in cafeterias, in offices, in libraries. Occupancy controls will be incorporated into each fixture in gyms. Wireless occupancy controls will be installed in classrooms, in offices, in gyms. Ceiling mounted dual technology occupancy controls will be installed in baths. A timer will be installed in storage areas, in classrooms, in kitchens, in mechanical areas.
- **Wayne Hills-High School:** Wall mounted occupancy controls will be installed in storage areas, in offices, in baths, in classrooms, in kitchens, in mechanical areas. Ceiling mounted occupancy controls will be installed in offices, in classrooms, in baths, in halls, in cafeterias, in storage areas. Occupancy controls will be incorporated into each fixture in gyms. A timer will be installed in storage areas, in offices, in gyms, in mechanical areas, in halls, in baths. Ceiling mounted dual technology occupancy controls will be installed in baths. Daylight harvesting controls will be installed in halls. Controls that turn lights off when adequate daylight is available will be installed in halls. Wireless occupancy controls will be installed in offices. Automated controls are already being used in storage areas, in classrooms, in baths, in offices, in halls.

"Page content is subject to Confidentiality Restrictions"

- **Wayne Valley-High School:** Occupancy controls will be incorporated into each fixture in gyms. Wall mounted occupancy controls will be installed in storage areas, in offices, in baths, in halls, in classrooms, in mechanical areas. Ceiling mounted occupancy controls will be installed in classrooms, in offices, in storage areas, in kitchens, in cafeterias, in retail spaces, in baths. Daylight harvesting controls will be installed in halls. Wireless occupancy controls will be installed in classrooms, in offices, in gyms, in cafeterias. A timer will be installed in storage areas, in mechanical areas, in baths. Ceiling mounted dual technology occupancy controls will be installed in baths. Controls that turn lights off when adequate daylight is available will be installed in halls. Automated controls are already being used in storage areas, in halls, in classrooms, in offices.
- **Preakness (Library Community Center):** Ceiling mounted occupancy controls will be installed in offices, in classrooms. Wall mounted occupancy controls will be installed in storage areas, in baths, in offices, in mechanical areas, in halls. A timer will be installed in baths, in storage areas, in offices. Occupancy controls will be incorporated into each fixture in auditoriums. Ceiling mounted dual technology occupancy controls will be installed in baths.
- **Board of Ed Administration:** Wall mounted occupancy controls will be installed in offices, in baths, in halls. Occupancy controls will be incorporated into each fixture in warehouses. Ceiling mounted occupancy controls will be installed in offices. Ceiling mounted dual technology occupancy controls will be installed in baths. A timer will be installed in storage areas, in mechanical areas. Automated controls are already being used in offices.

"Page content is subject to Confidentiality Restrictions"

Equipment, Design and Construction Documentation

Equipment will be identified in submittals provided for approval prior to procurement. The lighting system audit completed for each facility will be submitted as the basis for construction. These documents will be submitted for review and comment. Upon approval, these will constitute the construction documents. Upon completion of the construction phase, the documents will be revised as needed to reflect "As-Built" conditions, and submitted in multiple for record.

Impact on Facility Operations and Performance

All installations will be conducted after school hours, and will be coordinated with the appointed personnel.

Typically, automated lighting controls are not installed in every single location due to practicality, payback, or safety considerations. Therefore, fixtures or areas not listed are excluded from our scope.

Integration of Proposed Equipment with Existing Systems

The new lighting system, and all components thereof, will be fully integrated into the existing lighting systems. We assume the entire lighting and lighting controls systems comply with, but not limited to, the latest codes, the latest standards, local jurisdictions, and work was done in a quality workmanship manner, per NECA, and other applicable recommend best practices universally accepted throughout the electrical industry. Further we assume that all existing devices, which are defined in NEC, which includes but not limited to switches, outlets, wiring, etc. are in acceptable condition in order to implement our scope as outlined in the contract documents. All existing junction boxes, poles, mounting surfaces and structures are assumed to be in acceptable condition to allow the installation of the products indicated in the scope. Required upgrades to meet safety or other codes, and/or to prepare the location for the installation as described above, can be performed on a time and material basis.

Environmental Impact

There are no potential adverse environmental impacts associated with these lighting controls

.

"Page content is subject to Confidentiality Restrictions"

Appendix for ECM 2: Lighting Controls

I. Energy Savings Calculations

"Page content is subject to Confidentiality Restrictions"

This page is intentionally left blank.

Project Template	
Energy and Demand Savings Summary	
Measure ID:	**2**
Measure Name:	**Lighting Controls**
Measure Location:	
Engineers:	

Site Name:		**Carter ES**	**Dey ES**	**Fallon ES**	**Kennedy ES**	**Lafayette ES**	**Packanack ES**	**Pines Lake ES**	**Ryerson ES**	**Terhune ES**	**Anthony Wayne MS**	**Colfax MS**	**Washington MS**	**Wayne Hills HS**	**Wayne Valley HS**	**Preakness**	**Admin**	**Summary**
Item	Units	Savings	Savings	Savings	Savings	Savings	Savings	Savings	Savings	Savings	Savings	Savings	Savings	Savings	Savings	Savings	Savings	
Electricity																		
Energy On-Peak	kWh	13,920	15,704	19,158	17,134	19,911	18,183	20,248	20,379	15,073	12,154	56,488	52,786	59,186	96,753	11,331	6,336	454,743
Energy Off-Peak	kWh	0	0	0	0	0	0	0	0	0	0	0	0	0	0	0	0	0
Energy Total	kWh	13,920	15,704	19,158	17,134	19,911	18,183	20,248	20,379	15,073	12,154	56,488	52,786	59,186	96,753	11,331	6,336	454,743
Demand On-Peak, Monthly	kW	0.0	0.0	0.0	0.0	0.0	0.0	0.0	0.0	0.0	0.0	0.0	0.0	0.0	0.0	0.0	0.0	0.0
Demand On-Peak, Annual	kW	0.0	0.0	0.0	0.0	0.0	0.0	0.0	0.0	0.0	0.0	0.0	0.0	0.0	0.0	0.0	0.0	0.0
Demand Off-Peak, Monthly	kW	0.0	0.0	0.0	0.0	0.0	0.0	0.0	0.0	0.0	0.0	0.0	0.0	0.0	0.0	0.0	0.0	0.0
Demand Off-Peak, Annual	kW	0.0	0.0	0.0	0.0	0.0	0.0	0.0	0.0	0.0	0.0	0.0	0.0	0.0	0.0	0.0	0.0	0.0
Fossil Fuel																		0
Natural Gas (NG)	Therms	-206	-224	-238	-249	-280	-271	-286	-300	-222	-148	-832	-737	-855	-1,398	-165	-86	-6,497
Liquid Propane Gas (LPG)	Gallons	0	0	0	0	0	0	0	0	0	0	0	0	0	0	0	0	0
Steam	Mlbs	0	0	0	0	0	0	0	0	0	0	0	0	0	0	0	0	0
Fuel Oil, #2	Gallons	0	0	0	0	0	0	0	0	0	0	0	0	0	0	0	0	0
Fuel Oil, #4	Gallons	0	0	0	0	0	0	0	0	0	0	0	0	0	0	0	0	0
Fuel Oil, #6	Gallons	0	0	0	0	0	0	0	0	0	0	0	0	0	0	0	0	0
Miscellaneous	Misc	0	0	0	0	0	0	0	0	0	0	0	0	0	0	0	0	0
Water																		0
Water Savings	kGallons																	0
Sewer																		0
Sewer Savings	kGallons																	0

Project Template
Interactive Lighting Savings Calculation

	Lighting Savings		Heating Penalty				Cooling Benefit			
A	B	C	D	E	F	G	H	I	J	K
Facility	Annual kW	Annual kWh	Heat Gain to Space	Heating Months	Heating System Efficiency	Heating Penalty MMBtu	Total Space Cooled	Cooling Months	Cooling System COP	Cooling Benefit MMBtu
Randall Carter-Elementary School	0.0	13,733	80.0%	5.0	76.0%	(20.6)	12.0%	4.0	2.34	0.6
Theunis Dey-Elementary School	0.0	15,344	80.0%	5.0	78.0%	(22.4)	31.0%	4.0	3.52	1.2
James Fallon-Elementary School	0.0	17,807	80.0%	5.0	85.0%	(23.8)	75.0%	4.0	2.64	4.6
John F. Kennedy-Elementary School	0.0	16,657	80.0%	5.0	76.0%	(24.9)	33.0%	4.0	3.08	1.6
Lafayette-Elementary School	0.0	18,736	80.0%	5.0	76.0%	(28.0)	62.0%	4.0	2.64	4.0
Packanack-Elementary School	0.0	18,109	80.0%	5.0	76.0%	(27.1)	5.0%	4.0	3.22	0.3
Pines Lake-Elementary School	0.0	19,090	80.0%	5.0	76.0%	(28.6)	60.0%	4.0	2.64	4.0
Ryerson-Elementary School	0.0	20,015	80.0%	5.0	76.0%	(30.0)	24.0%	4.0	3.52	1.2
Albert Payson Terhune-Elementary School	0.0	14,861	80.0%	5.0	76.0%	(22.2)	18.0%	4.0	3.37	0.7
Anthony Wayne-Middle School	0.0	11,091	80.0%	5.0	85.3%	(14.8)	100.0%	4.0	2.78	3.6
Schuyler-Colfax-Middle School	0.0	55,568	80.0%	5.0	76.0%	(83.2)	20.0%	4.0	3.22	3.1
George Washington-Middle School	0.0	51,800	80.0%	5.0	80.0%	(73.7)	23.0%	4.0	3.22	3.4
Wayne Hills-High School	0.0	57,107	80.0%	5.0	76.0%	(85.5)	50.0%	4.0	3.66	7.1
Wayne Valley-High School	0.0	95,846	80.0%	5.0	78.0%	(139.8)	13.0%	4.0	3.66	3.1
Preakness (Library Community Center)	0.0	11,052	80.0%	5.0	76.0%	(16.5)	25.0%	4.0	2.64	1.0
Board of Ed Administration	0.0	5,754	80.0%	5.0	76.0%	(8.6)	100.0%	4.0	2.64	2.0
Totals	**0.0**	**442,568**				**(649.7)**				**41.6**

Notes:	
A	Applicable building included in comprehensive energy audit
B	Lighting demand savings {kW} associated with lighting retrofit measures
C	Lighting energy savings {kWh} associated with lighting retrofit measures
D	Estimated percentage of lighting energy transmitted to conditioned space
E	Estimated length of heating season
F	Estimated heating system efficiency, interacted with other measures
G	Resulting heating penalty due to lighting upgrades = [col C] x [col D] x 3,413 x ([col E] / 12) / [col F] / 1,000,000
H	Estimated percentage of space cooled
I	Estimated Length of cooling season
J	Estimated cooling system efficiency, interacted with other measures
K	Resulting cooling benefit due to lighting upgrades = [col C] x [col D] x 3,413 x ([col I] / 12) / [col J] / 1,000,000

In or Out	Line	Building Name	Location	Fl	Pre Fixture Description	Pre Qty	Pre kW	Post Fixture Description	Post Qty	Post kW	Annual Hours	*Control Description*	*Control Qty*	Control kWH Saved
IN	1	George Washingto	Classroom 201	2	4L4' T12 EE/EEMAG-8'	3	0.4	2L4' T8 28w/ELEE HI/NEW-8'	3	0.2	2,840	INCLUDED ABOVE		164
IN	2	George Washingto	Classroom 201	2	4L4' T12 EE/EEMAG-8'	6	0.8	2L4' T8 28w/ELEE HI/NEW-8'	6	0.4	2,840	OCC SENSOR CEILING	1	327
IN	3	George Washingto	Classroom 202	2	4L4' T12 EE/EEMAG-8'	3	0.4	2L4' T8 28w/ELEE HI/NEW-8'	3	0.2	2,840	INCLUDED ABOVE		164
IN	4	George Washingto	Classroom 202	2	4L4' T12 EE/EEMAG-8'	6	0.8	2L4' T8 28w/ELEE HI/NEW-8'	6	0.4	2,840	OCC SENSOR CEILING	1	327
IN	5	George Washingto	Classroom 203	2	4L4' T12 EE/EEMAG-8'	3	0.4	2L4' T8 28w/ELEE HI/NEW-8'	3	0.2	2,840	INCLUDED ABOVE		164
IN	6	George Washingto	Classroom 203	2	4L4' T12 EE/EEMAG-8'	6	0.8	2L4' T8 28w/ELEE HI/NEW-8'	6	0.4	2,840	OCC SENSOR CEILING	1	327
IN	7	George Washingto	Classroom 204	2	4L4' T12 EE/EEMAG-8'	3	0.4	2L4' T8 28w/ELEE HI/NEW-8'	3	0.2	2,840	INCLUDED ABOVE		164
IN	8	George Washingto	Classroom 204	2	4L4' T12 EE/EEMAG-8'	6	0.8	2L4' T8 28w/ELEE HI/NEW-8'	6	0.4	2,840	OCC SENSOR CEILING	1	327
IN	9	George Washingto	Stair	s	2L4' T12 U EE/EEMAG	2	0.1	2L2' T8 15w/ELEE HI/RFL	2	0.1	3,640	NO RETRO		
IN	10	George Washingto	Stair	s	2L4' T8 U/EL	1	0.1	2L2' T8 15w/ELEE HI/RFL	1	0.0	3,640	NO RETRO		
IN	11	George Washingto	Stair	s	2L4' T8 32w/EL	1	0.1	2L4' T8 28w/ELEE LO	1	0.0	3,640	NO RETRO		
IN	12	George Washingto	Stair By 210	s	2L4' T8 32w/EL	3	0.2	2L4' T8 28w/ELEE LO	3	0.1	3,640	NO RETRO		
IN	13	George Washingto	Stair By 210	s	4L4' T12 EE/EEMAG	1	0.1	2L4' T8 28w/ELEE HI/RFL	1	0.1	3,640	NO RETRO		
IN	14	George Washingto	Office 206	2	4L4' T12 EE/EEMAG-8'	2	0.3	2L4' T8 28w/ELEE HI/NEW-8'	2	0.1	2,840	OCC SENSOR CEILING	1	109
IN	15	George Washingto	Office 230 Sgi	2	4L4' T12 EE/EEMAG-8'	2	0.3	2L4' T8 28w/ELEE HI/NEW-8'	2	0.1	2,840	OCC SENSOR CEILING	1	109
IN	16	George Washingto	Classroom 229	2	4L4' T12 EE/EEMAG-8'	9	1.3	2L4' T8 28w/ELEE HI/NEW-8'	9	0.6	2,840	OCC SENSOR CEILING	1	491
IN	17	George Washingto	Classroom 229	2	2L4' T12 EE/EEMAG	2	0.1	1L4' T8 28w/ELEE HI/NEW	2	0.1	2,840	INCLUDED ABOVE		56
IN	18	George Washingto	Classroom 229	2	4L4' T12 EE/EEMAG-8'	3	0.4	2L4' T8 28w/ELEE HI/NEW-8'	3	0.2	2,840	INCLUDED ABOVE		164
IN	19	George Washingto	Office 227 Prep Room	2	4L4' T12 EE/EEMAG-8'	4	0.6	2L4' T8 28w/ELEE HI/NEW-8'	4	0.3	2,840	OCC SENSOR CEILING	1	218
IN	20	George Washingto	Classroom 227	2	4L4' T12 EE/EEMAG-8'	9	1.3	2L4' T8 28w/ELEE HI/NEW-8'	9	0.6	2,840	OCC SENSOR CEILING	1	491
IN	21	George Washingto	Classroom 227	2	2L4' T12 EE/EEMAG	2	0.1	1L4' T8 28w/ELEE HI/NEW	2	0.1	2,840	INCLUDED ABOVE		56
IN	22	George Washingto	Classroom 227	2	4L4' T12 EE/EEMAG-8'	3	0.4	2L4' T8 28w/ELEE HI/NEW-8'	3	0.2	2,840	INCLUDED ABOVE		164
IN	23	George Washingto	Storage 228	2	2L4' T12 EE/EEMAG-8'	1	0.1	2L4' T8 28w/ELEE LO/STRIP KI	1	0.0	500	OCC SENSOR WALLSWITCH	1	6
IN	24	George Washingto	Classroom 226	2	3L4' T8 32w/EL	12	1.1	2L4' T8 28w/ELEE HI/RFL	12	0.8	2,840	OCC SENSOR CEILING	1	654
IN	25	George Washingto	Classroom 225	2	4L4' T12 EE/EEMAG-8'	9	1.3	2L4' T8 28w/ELEE HI/NEW-8'	9	0.6	2,840	OCC SENSOR CEILING	1	491
IN	26	George Washingto	Classroom 225	2	2L4' T12 EE/EEMAG	2	0.1	1L4' T8 28w/ELEE HI/NEW	2	0.1	2,840	INCLUDED ABOVE		56
IN	27	George Washingto	Classroom 225	2	4L4' T12 EE/EEMAG-8'	3	0.4	2L4' T8 28w/ELEE HI/NEW-8'	3	0.2	2,840	INCLUDED ABOVE		164
IN	28	George Washingto	Office 223	2	4L4' T12 EE/EEMAG-8'	4	0.6	2L4' T8 28w/ELEE HI/NEW-8'	4	0.3	2,840	OCC SENSOR CEILING	1	218
IN	29	George Washingto	Classroom 223	2	4L4' T12 EE/EEMAG-8'	9	1.3	2L4' T8 28w/ELEE HI/NEW-8'	9	0.6	2,840	OCC SENSOR CEILING	1	491
IN	30	George Washingto	Classroom 223	2	2L4' T12 EE/EEMAG	2	0.1	1L4' T8 28w/ELEE HI/NEW	2	0.1	2,840	INCLUDED ABOVE		56
IN	31	George Washingto	Classroom 223	2	4L4' T12 EE/EEMAG-8'	3	0.4	2L4' T8 28w/ELEE HI/NEW-8'	3	0.2	2,840	INCLUDED ABOVE		164
IN	32	George Washingto	Classroom 224	2	4L4' T12 EE/EEMAG-8'	12	1.7	2L4' T8 28w/ELEE HI/NEW-8'	12	0.8	2,840	OCC SENSOR CEILING	1	654
IN	33	George Washingto	Classroom 224	2	100W INCANDESCENT	3	0.3	21 WATT LED SI/LED21Par38/D	3	0.1	2,840	TIMER WALLSWITCH 1GANG	1	54
IN	34	George Washingto	Classroom 215	2	4L4' T12 EE/EEMAG-8'	6	0.8	2L4' T8 28w/ELEE HI/NEW-8'	6	0.4	2,840	OCC SENSOR CEILING	1	327
IN	35	George Washingto	Classroom 215	2	4L4' T12 EE/EEMAG-8'	3	0.4	2L4' T8 28w/ELEE HI/NEW-8'	3	0.2	2,840	INCLUDED ABOVE		164
IN	36	George Washingto	Classroom 216	2	4L4' T12 EE/EEMAG-8'	6	0.8	2L4' T8 28w/ELEE HI/NEW-8'	6	0.4	2,840	OCC SENSOR CEILING	1	327
IN	37	George Washingto	Classroom 216	2	4L4' T12 EE/EEMAG-8'	3	0.4	2L4' T8 28w/ELEE HI/NEW-8'	3	0.2	2,840	INCLUDED ABOVE		164
IN	38	George Washingto	Classroom 221A	2	3L4' T12 EE/EEMAG	6	0.7	2L4' T8 28w/ELEE HI/RFL	6	0.4	2,840	OCC SENSOR CEILING	1	327
IN	39	George Washingto	Classroom 221B	2	3L4' T12 EE/EEMAG	6	0.7	2L4' T8 28w/ELEE HI/RFL	6	0.4	2,840	OCC SENSOR CEILING	1	327
IN	40	George Washingto	Classroom 210	2	3L4' T12 EE/EEMAG	12	1.3	2L4' T8 28w/ELEE HI/RFL	12	0.8	2,840	OCC SENSOR CEILING	1	654

In or Out	Line	Building Name	Location	Fl	Pre Fixture Description	Pre Qty	Pre kW	Post Fixture Description	Post Qty	Post kW	Annual Hours	*Control Description*	*Control Qty*	Control kWH Saved
IN	41	George Washingto	Classroom 219	2	3L4' T12 EE/EEMAG	12	1.3	2L4' T8 28w/ELEE HI/RFL	12	0.8	2,840	OCC SENSOR CEILING	1	654
IN	42	George Washingto	Classroom 218	2	3L4' T12 EE/EEMAG	12	1.3	2L4' T8 28w/ELEE HI/RFL	12	0.8	2,840	OCC SENSOR CEILING	1	654
IN	43	George Washingto	Classroom 217	2	3L4' T12 EE/EEMAG	12	1.3	2L4' T8 28w/ELEE HI/RFL	12	0.8	2,840	OCC SENSOR CEILING	1	654
IN	44	George Washingto	Bath Girls	2	3L4' T12 EE/EEMAG	2	0.2	3L4' T8 28w/ELEE LO	2	0.1	3,640	OCC SENSOR CEIL DT 1GAN	1	138
IN	45	George Washingto	Bath Boys	2	3L4' T12 EE/EEMAG	2	0.2	3L4' T8 28w/ELEE LO	2	0.1	3,640	OCC SENSOR CEIL DT 1GAN	1	138
IN	46	George Washingto	Closet 217	2	2L4' T12 EE/EEMAG	1	0.1	2L4' T8 28w/ELEE LO	1	0.0	500	OCC SENSOR WALLSWITCH	1	6
IN	47	George Washingto	Classroom 213	2	4L4' T12 EE/EEMAG-8'	3	0.4	2L4' T8 28w/ELEE HI/NEW-8'	3	0.2	2,840	INCLUDED ABOVE		164
IN	48	George Washingto	Classroom 213	2	4L4' T12 EE/EEMAG-8'	6	0.8	2L4' T8 28w/ELEE HI/NEW-8'	6	0.4	2,840	OCC SENSOR CEILING	1	327
IN	49	George Washingto	Classroom 214	2	4L4' T12 EE/EEMAG-8'	3	0.4	2L4' T8 28w/ELEE HI/NEW-8'	3	0.2	2,840	INCLUDED ABOVE		164
IN	50	George Washingto	Classroom 214	2	4L4' T12 EE/EEMAG-8'	6	0.8	2L4' T8 28w/ELEE HI/NEW-8'	6	0.4	2,840	OCC SENSOR CEILING	1	327
IN	51	George Washingto	Classroom 212	2	6L4' T8 32w/EL-8'	9	1.6	6L4' T8 28w/ELEE LO-8'	9	1.1	2,840	OCC SENSOR CEILING	1	966
IN	52	George Washingto	Classroom 212	2	3L4' T8 32w/EL	3	0.3	3L4' T8 28w/ELEE LO	3	0.2	2,840	INCLUDED ABOVE		161
IN	53	George Washingto	Classroom 211	2	6L4' T8 32w/EL-8'	9	1.6	6L4' T8 28w/ELEE LO-8'	9	1.1	2,840	OCC SENSOR CEILING	1	966
IN	54	George Washingto	Classroom 211	2	3L4' T8 32w/EL	3	0.3	3L4' T8 28w/ELEE LO	3	0.2	2,840	INCLUDED ABOVE		161
IN	55	George Washingto	Bath Bt210	2	2L4' T8 32w/EL	3	0.2	2L4' T8 28w/ELEE LO	3	0.1	3,640	OCC SENSOR CEIL DT 1GAN	1	138
IN	56	George Washingto	Bath Mt210	2	60W INCANDESCENT	1	0.1	11 WATT LED SI/LED10Par20/D	1	0.0	3,640	OCC SENSOR WALLSWITCH	1	12
IN	57	George Washingto	Bath Mt210	2	2L2' T8 17w/EL	1	0.0	2L2' T8 15w/ELEE LO/NEW	1	0.0	3,640	INCLUDED ABOVE		26
IN	58	George Washingto	Classroom 209	2	4L4' T12 EE/EEMAG-8'	12	1.7	2L4' T8 28w/ELEE HI/NEW-8'	12	0.8	2,840	OCC SENSOR CEILING	1	654
IN	59	George Washingto	Classroom 209	2	2L4' T12 EE/EEMAG	2	0.1	1L4' T8 28w/ELEE HI/NEW	2	0.1	2,840	INCLUDED ABOVE		56
IN	60	George Washingto	Closet 210	2	1L4' T12 EE/EEMAG	1	0.0	1L4' T8 28w/ELEE LO/STRIP KI	1	0.0	500	NO RETRO		
IN	61	George Washingto	Bath Bt210	2	2L4' T12 EE/EEMAG	3	0.2	2L4' T8 28w/ELEE HI/RFL	3	0.2	3,640	OCC SENSOR CEIL DT 1GAN	1	210
IN	62	George Washingto	Bath Wt120	2	2L2' T8 17w/EL	1	0.0	2L2' T8 15w/ELEE LO/NEW	1	0.0	3,640	OCC SENSOR WALLSWITCH	1	26
IN	63	George Washingto	Bath Wt120	2	2L4' T12 U EE/EEMAG	1	0.1	2L2' T8 15w/ELEE HI/RFL	1	0.0	3,640	INCLUDED ABOVE		36
IN	64	George Washingto	Classroom 208	2	4L4' T12 EE/EEMAG-8'	2	0.3	2L4' T8 28w/ELEE HI/NEW-8'	2	0.1	2,840	OCC SENSOR CEILING	1	109
IN	65	George Washingto	Classroom 208	2	2L4' T12 EE/EEMAG	2	0.1	1L4' T8 28w/ELEE HI/NEW	2	0.1	2,840	INCLUDED ABOVE		56
IN	66	George Washingto	Classroom 207	2	4L4' T12 EE/EEMAG-8'	12	1.7	2L4' T8 28w/ELEE HI/NEW-8'	12	0.8	2,840	OCC SENSOR CEILING	1	654
IN	67	George Washingto	Classroom 207	2	2L4' T12 EE/EEMAG	2	0.1	1L4' T8 28w/ELEE HI/NEW	2	0.1	2,840	INCLUDED ABOVE		56
IN	68	George Washingto	Closet 207As	2	1L4' T12 EE/EEMAG	1	0.0	1L4' T8 28w/ELEE LO/STRIP KI	1	0.0	500	OCC SENSOR WALLSWITCH	1	3
IN	69	George Washingto	Office 205	2	4L4' T12 EE/EEMAG-8'	1	0.1	2L4' T8 28w/ELEE HI/NEW-8'	1	0.1	2,840	NO RETRO		
IN	70	George Washingto	Office 205	2	2L4' T12 EE/EEMAG	1	0.1	1L4' T8 28w/ELEE HI/NEW	1	0.0	2,840	NO RETRO		
IN	71	George Washingto	Hall 2A	2	6L2' T12 STD/STD	11	1.8	6L2' T8 15w/ELEE LO	11	0.9	3,640	NO RETRO		
IN	72	George Washingto	Hall 2B	2	6L2' T12 STD/STD	10	1.7	6L2' T8 15w/ELEE LO	10	0.8	3,640	NO RETRO		
IN	73	George Washingto	Hall 2D	2	6L2' T12 STD/STD	11	1.8	6L2' T8 15w/ELEE LO	11	0.9	3,640	NO RETRO		
IN	74	George Washingto	Hall 2E	2	4L4' T12 EE/EEMAG	2	0.3	2L4' T8 28w/ELEE HI/RFL	2	0.1	3,640	NO RETRO		
IN	75	George Washingto	Hall 2E	2	3L4' T12 EE/EEMAG	3	0.3	3L4' T8 28w/ELEE LO	3	0.2	3,640	DAYLIGHT HARVESTING SYS	3	344
IN	76	George Washingto	Stair South	s	2L4' T12 EE/EEMAG	6	0.4	1L4' T8 28w/ELEE HI/NEW	6	0.2	3,640	NO RETRO		
IN	77	George Washingto	Hall 2G	2	2L4' T12 EE/EEMAG	26	1.8	2L4' T8 28w/ELEE LO	26	1.1	3,640	DAYLIGHT HARVESTING SYS	26	1,987
IN	78	George Washingto	Stair 2G	s	2L4' T12 EE/EEMAG	6	0.4	1L4' T8 28w/ELEE HI/NEW	6	0.2	3,640	NO RETRO		
IN	79	George Washingto	Hall 2F	2	3L4' T8 32w/EL	2	0.2	3L4' T8 28w/ELEE LO	2	0.1	3,640	DAYLIGHT HARVESTING SYS	2	229
IN	80	George Washingto	Hall 2F	2	3L4' T8 32w/EL	3	0.3	3L4' T8 28w/ELEE LO	3	0.2	3,640	NO RETRO		

In or Out	Line	Building Name	Location	Fl	Pre Fixture Description	Pre Qty	Pre kW	Post Fixture Description	Post Qty	Post kW	Annual Hours	*Control Description*	*Control Qty*	Control kWH Saved
IN	81	George Washingto	Hall 2C	2	6L2' T12 STD/STD	10	1.7	6L2' T8 15w/ELEE LO	10	0.8	3,640	NO RETRO		
IN	82	George Washingto	Office 136 Maintenance	1	2L4' T12 EE/EEMAG-8'	4	0.3	2L4' T8 28w/ELEE LO/STRIP KI	4	0.2	2,840	NO RETRO		
IN	83	George Washingto	Office 136 Maintenance	1	1L4' T12 EE/EEMAG	1	0.0	1L4' T8 28w/ELEE LO/STRIP KI	1	0.0	2,840	NO RETRO		
IN	84	George Washingto	Bath 136 Maintenance	1	40W INCANDESCENT	1	0.0	11 WATT LED SI/LED10Par20/D	1	0.0	3,640	OCC SENSOR WALLSWITCH	1	12
IN	85	George Washingto	Closet 136 Maintenance	1	150W INCANDESCENT	1	0.2	2L2' T8 15w/ELEE LO/NEW	1	0.0	500	TIMER WALLSWITCH 1GANG	1	4
IN	86	George Washingto	Mechanical 135 Boiler Room	1	2L4' T8 32w/EL	1	0.1	2L4' T8 28w/ELEE LO/NEW	1	0.0	500	TIMER WALLSWITCH 1GANG	1	6
IN	87	George Washingto	Mechanical 135 Boiler Room	1	2L4' F48 T12 HO EE/STD	8	1.1	2L4' T8 28w/ELEE LO/NEW	8	0.3	500	INCLUDED ABOVE		50
IN	88	George Washingto	Cafeteria 134 East Hall Seating A	1	4L4' T12 EE/EEMAG	30	4.2	2L4' T8 28w/ELEE HI/RFL	30	1.9	3,440	OCC SENSOR CEILING	4	1,981
IN	89	George Washingto	Cafeteria 134 East Hall Seating A	1	2L4' T12 U EE/EEMAG	1	0.1	2L2' T8 15w/ELEE HI/RFL	1	0.0	3,440	INCLUDED ABOVE		34
IN	90	George Washingto	Cafeteria 134 East Hall Seating A	1	40W INCANDESCENT	2	0.1	3 WATT LED/KIT	2	0.0	3,440	NO RETRO		
IN	91	George Washingto	Cafeteria 134 East Hall Seating A	1	100W METAL HALIDE	1	0.1	22 WATT LED/KIT	1	0.0	3,440	NO RETRO		
IN	92	George Washingto	Kitchen 133	1	4L4' T12 EE/EEMAG-8'	15	2.1	4L4' T8 28w/ELEE LO/NEW-8'	15	1.2	2,840	NO RETRO		
IN	93	George Washingto	Kitchen 133	1	2L4' T12 EE/EEMAG	6	0.4	2L4' T8 28w/ELEE LO/NEW	6	0.3	2,840	NO RETRO		
IN	94	George Washingto	Kitchen Grease Hood	1	2L4' T12 EE/EEMAG	3	0.2	2L4' T8 28w/ELEE LO	3	0.1	2,840	TIMER WALLSWITCH 1GANG	1	107
IN	95	George Washingto	Hall By Cooler	1	2L4' T12 EE/EEMAG-8'	1	0.1	2L4' T8 28w/ELEE HI/NEW-8'	1	0.1	3,640	NO RETRO		
IN	96	George Washingto	Hall By Cooler	1	2L4' T8 32w/EL	1	0.1	1L4' T8 28w/ELEE HI/NEW	1	0.0	3,640	NO RETRO		
IN	97	George Washingto	Closet 133As	1	100W INCANDESCENT	1	0.1	2L2' T8 15w/ELEE LO/NEW	1	0.0	500	NO RETRO		
IN	98	George Washingto	Bath 133Tr	1	2L4' T8 32w/EL	1	0.1	1L4' T8 28w/ELEE HI/NEW	1	0.0	3,640	OCC SENSOR WALLSWITCH	1	36
IN	99	George Washingto	Bath 133Tr	1	2L2' T8 17w/EL	1	0.0	2L2' T8 15w/ELEE LO/NEW	1	0.0	3,640	INCLUDED ABOVE		26
IN	100	George Washingto	Office 133Bs	1	2L4' T8 32w/EL	4	0.2	1L4' T8 28w/ELEE HI/NEW	4	0.1	2,840	NO RETRO		
IN	101	George Washingto	Storage 133Cs Dry Goods	1	2L4' T8 32w/EL	2	0.1	1L4' T8 28w/ELEE HI/NEW	2	0.1	2,440	NO RETRO		
IN	102	George Washingto	Cafeteria 134 East Hall Seating A	1	4L4' T12 EE/EEMAG	24	3.4	2L4' T8 28w/ELEE HI/RFL	24	1.5	3,440	OCC SENSOR CEILING	4	1,585
IN	103	George Washingto	Cafeteria 134 East Hall Seating A	1	4L4' T8 32w/EL	8	0.9	2L4' T8 28w/ELEE HI/RFL	8	0.5	3,440	INCLUDED ABOVE		528
IN	104	George Washingto	Cafeteria 134 East Hall Seating A	1	40W INCANDESCENT	2	0.1	3 WATT LED/KIT	2	0.0	3,440	NO RETRO		
IN	105	George Washingto	Cafeteria 132	1	4L4' T12 EE/EEMAG	8	1.1	2L4' T8 28w/ELEE HI/RFL	8	0.5	3,440	OCC SENSOR CORNER MT.	1	528
IN	106	George Washingto	Classroom 131	1	4L4' T12 EE/EEMAG-8'	6	0.8	2L4' T8 28w/ELEE HI/NEW	6	0.4	2,840	NO RETRO		
IN	107	George Washingto	Mechanical 122 Electrical	1	2L4' T12 EE/EEMAG	1	0.1	1L4' T8 28w/ELEE HI/NEW	1	0.0	500	NO RETRO		
IN	108	George Washingto	Bath Bt121 Boys	1	3L4' T12 EE/EEMAG	2	0.2	3L4' T8 28w/ELEE LO	2	0.1	3,640	OCC SENSOR CEIL DT 1GAN	1	138
IN	109	George Washingto	Bath Gt121	1	3L4' T12 EE/EEMAG	2	0.2	3L4' T8 28w/ELEE LO	2	0.1	3,640	OCC SENSOR CEIL DT 1GAN	1	138
IN	110	George Washingto	Classroom 120	1	3L4' T12 EE/EEMAG	12	1.3	2L4' T8 28w/ELEE HI/RFL	12	0.8	2,840	OCC SENSOR CEILING	1	654
IN	111	George Washingto	Classroom 119	1	3L4' T12 EE/EEMAG	12	1.3	2L4' T8 28w/ELEE HI/RFL	12	0.8	2,840	OCC SENSOR CEILING	1	654
IN	112	George Washingto	Classroom 118	1	3L4' T12 EE/EEMAG	12	1.3	2L4' T8 28w/ELEE HI/RFL	12	0.8	2,840	OCC SENSOR CEILING	1	654
IN	113	George Washingto	Classroom 117	1	3L4' T12 EE/EEMAG	12	1.3	2L4' T8 28w/ELEE HI/RFL	12	0.8	2,840	OCC SENSOR CEILING	1	654
IN	114	George Washingto	Classroom 116B	1	3L4' T12 EE/EEMAG	6	0.7	2L4' T8 28w/ELEE HI/RFL	6	0.4	2,840	OCC SENSOR CEILING	1	327
IN	115	George Washingto	Classroom 116A	1	3L4' T12 EE/EEMAG	6	0.7	2L4' T8 28w/ELEE HI/RFL	6	0.4	2,840	OCC SENSOR CEILING	1	327
IN	116	George Washingto	Classroom 126	1	4L4' T12 EE/EEMAG-8'	7	1.0	2L4' T8 28w/ELEE HI/NEW-8'	7	0.4	2,840	OCC SENSOR CEILING	1	382
IN	117	George Washingto	Classroom 126	1	2L4' T12 EE/EEMAG	2	0.1	1L4' T8 28w/ELEE HI/NEW	2	0.1	2,840	INCLUDED ABOVE		56
IN	118	George Washingto	Classroom 125	1	4L4' T12 EE/EEMAG-8'	9	1.3	2L4' T8 28w/ELEE HI/NEW-8'	9	0.6	2,840	OCC SENSOR CEILING	1	491
IN	119	George Washingto	Classroom 124	1	4L4' T12 EE/EEMAG-8'	7	1.0	2L4' T8 28w/ELEE HI/NEW-8'	7	0.4	2,840	OCC SENSOR CEILING	1	382
IN	120	George Washingto	Classroom 124	1	2L4' T12 EE/EEMAG	2	0.1	1L4' T8 28w/ELEE HI/NEW	2	0.1	2,840	INCLUDED ABOVE		56

In or Out	Line	Building Name	Location	Fl	Pre Fixture Description	Pre Qty	Pre kW	Post Fixture Description	Post Qty	Post kW	Annual Hours	*Control Description*	*Control Qty*	Control kWH Saved
IN	121	George Washingto	Classroom 123	1	4L4' T12 EE/EEMAG-8'	9	1.3	2L4' T8 28w/ELEE HI/NEW-8'	9	0.6	2,840	OCC SENSOR CEILING	1	491
IN	122	George Washingto	Bath Mt127	1	23W COMPACT HARDWIF	4	0.1	NO RETRO		0.1	3,640	OCC SENSOR CEIL DT 1GAN	1	105
IN	123	George Washingto	Bath Mt127	1	2L4' T8 U/EL	1	0.1	2L2' T8 15w/ELEE HI/RFL	1	0.0	3,640	INCLUDED ABOVE		36
IN	124	George Washingto	Bath Mt127	1	2L2' T8 17w/EL	1	0.0	2L2' T8 15w/ELEE LO/NEW	1	0.0	3,640	INCLUDED ABOVE		26
IN	125	George Washingto	Closet Cc127	1	100W INCANDESCENT	1	0.1	23W COMPACT SI/29712/CF23I	1	0.0	500	NO RETRO		
IN	126	George Washingto	Bath Wt127	1	23W COMPACT HARDWIF	4	0.1	NO RETRO		0.1	3,640	OCC SENSOR CEIL DT 1GAN	1	105
IN	127	George Washingto	Bath Wt127	1	2L4' T8 U/EL	1	0.1	2L2' T8 15w/ELEE HI/RFL	1	0.0	3,640	INCLUDED ABOVE		36
IN	128	George Washingto	Bath Wt127	1	2L2' T8 17w/EL	1	0.0	2L2' T8 15w/ELEE LO/NEW	1	0.0	3,640	INCLUDED ABOVE		26
IN	129	George Washingto	Classroom 127	1	4L4' T12 EE/EEMAG-8'	9	1.3	2L4' T8 28w/ELEE HI/NEW-8'	9	0.6	2,840	OCC SENSOR CEILING	1	491
IN	130	George Washingto	Classroom 127	1	100W INCANDESCENT	2	0.2	21 WATT LED SI/LED21Par38/D	2	0.0	2,840	TIMER WALLSWITCH 1GANG	1	36
IN	131	George Washingto	Gym Main	1	400W METAL HALIDE	36	16.4	172 WATT LED/NEW	36	6.2	3,440	OCC. SENSOR ON HI BAY FI	36	6,390
IN	132	George Washingto	Locker 114 Girls	1	3L4' T8 32w/EL	1	0.1	3L4' T8 28w/ELEE LO	1	0.1	3,640	NO RETRO		
IN	133	George Washingto	Locker 114 Girls	1	2L4' T12 EE/EEMAG-8'	10	0.7	2L4' T8 28w/ELEE LO/NEW-8'	10	0.4	3,640	NO RETRO		
IN	134	George Washingto	Locker 114 Girls	1	2x60W INCANDESCENTS	5	0.6	2L4' T8 28w/ELEE LO/NEW	5	0.2	3,640	NO RETRO		
IN	135	George Washingto	Office 114Ao	1	4L4' T12 EE/EEMAG-8'	1	0.1	2L4' T8 28w/ELEE HI/NEW-8'	1	0.1	2,840	NO RETRO		
IN	136	George Washingto	Bath 114Ao	1	2L2' T12 STD/STD	1	0.1	2L2' T8 15w/ELEE LO/NEW	1	0.0	3,640	OCC SENSOR WALLSWITCH	1	26
IN	137	George Washingto	Bath 114Ao	1	60W INCANDESCENT	1	0.1	11 WATT LED SI/LED10Par20/D	1	0.0	3,640	OCC SENSOR WALLSWITCH	1	12
IN	138	George Washingto	Closet 114As	1	2L4' T12 EE/EEMAG	1	0.1	1L4' T8 28w/ELEE HI/NEW	1	0.0	500	OCC SENSOR WALLSWITCH	1	5
IN	139	George Washingto	Bath Gt114	1	2L4' T8 32w/EL	1	0.1	2L4' T8 28w/ELEE LO	1	0.0	3,640	OCC SENSOR WALLSWITCH	1	46
IN	140	George Washingto	Bath Gt114	1	2L2' T12 STD/STD	1	0.1	2L2' T8 15w/ELEE LO/NEW	1	0.0	3,640	INCLUDED ABOVE		26
IN	141	George Washingto	Closet Gt114	1	1L4' T12 EE/EEMAG	2	0.1	1L4' T8 28w/ELEE LO/STRIP KI	2	0.0	500	TIMER WALLSWITCH 1GANG	2	7
IN	142	George Washingto	Closet Gt114	1	2L4' T12 EE/EEMAG-8'	1	0.1	2L4' T8 28w/ELEE LO/STRIP KI	1	0.0	500	INCLUDED ABOVE		6
IN	143	George Washingto	Hall 114 Girls	1	3L4' T12 EE/EEMAG	1	0.1	3L4' T8 28w/ELEE LO	1	0.1	3,640	NO RETRO		
IN	144	George Washingto	Gym 115 Aux	1	2L4' T8 32w/EL	36	2.2	2L4' T8 28w/ELEE LO	36	1.5	3,440	OCC SENSOR CEILING	1	1,560
IN	145	George Washingto	Gym 115 Aux	1	100W INCANDESCENT	1	0.1	21 WATT LED SI/LED21Par38/D	1	0.0	3,440	INCLUDED ABOVE		22
IN	146	George Washingto	Closet 113As	1	2L4' T12 EE/EEMAG	4	0.3	1L4' T8 28w/ELEE HI/NEW	4	0.1	500	NO RETRO		
IN	147	George Washingto	Closet 113Bs	1	2L4' T12 EE/EEMAG-8'	1	0.1	2L4' T8 28w/ELEE LO/STRIP KI	1	0.0	500	OCC SENSOR WALLSWITCH	1	6
IN	148	George Washingto	Bath Bt113 Boys	1	2L4' T8 32w/EL	3	0.2	2L4' T8 28w/ELEE LO	3	0.1	3,640	OCC SENSOR CEIL DT 1GAN	1	138
IN	149	George Washingto	Mechanical Mr113	1	2L4' T12 EE/EEMAG-8'	1	0.1	2L4' T8 28w/ELEE LO/STRIP KI	1	0.0	500	OCC SENSOR WALLSWITCH	1	6
IN	150	George Washingto	Bath Gt113	1	2L4' T8 32w/EL	3	0.2	2L4' T8 28w/ELEE LO	3	0.1	3,640	OCC SENSOR CEIL DT 1GAN	1	138
IN	151	George Washingto	Bath Gt113	1	2L2' T12 STD/STD	3	0.2	2L2' T8 15w/ELEE LO/NEW	3	0.1	3,640	INCLUDED ABOVE		79
IN	152	George Washingto	Storage 113Cs	1	2L4' T12 EE/EEMAG	4	0.3	1L4' T8 28w/ELEE HI/NEW	4	0.1	500	NO RETRO		
IN	153	George Washingto	Locker 111 Boys	1	2L4' T12 EE/EEMAG-8'	3	0.2	2L4' T8 28w/ELEE HI/NEW-8'	3	0.2	3,640	NO RETRO		
IN	154	George Washingto	Locker 111 Boys	1	2L4' T12 EE/EEMAG	1	0.1	1L4' T8 28w/ELEE HI/NEW	1	0.0	3,640	NO RETRO		
IN	155	George Washingto	Bath 111 Boys	1	2L4' T12 EE/EEMAG	1	0.1	1L4' T8 28w/ELEE HI/NEW	1	0.0	3,640	OCC SENSOR WALLSWITCH	1	36
IN	156	George Washingto	Closet 111As	1	2L4' T12 EE/EEMAG-8'	1	0.1	2L4' T8 28w/ELEE HI/NEW-8'	1	0.1	500	NO RETRO		
IN	157	George Washingto	Closet 111As	1	2L8' T12 HO STD/EL	5	1.0	2L4' T8 28w/ELEE HI/NEW-8'	5	0.3	500	NO RETRO		
IN	158	George Washingto	Closet 111As	1	100W INCANDESCENT	6	0.6	2L4' T8 28w/ELEE LO/NEW	6	0.3	500	NO RETRO		
IN	159	George Washingto	Office 111Ao	1	4L4' T12 EE/EEMAG-8'	2	0.3	2L4' T8 28w/ELEE HI/NEW-8'	2	0.1	2,840	OCC SENSOR WALLSWITCH	1	109
IN	160	George Washingto	Bath 111Ao	1	2L2' T12 STD/STD	1	0.1	2L2' T8 15w/ELEE LO/NEW	1	0.0	3,640	OCC SENSOR WALLSWITCH	1	26

In or Out	Line	Building Name	Location	Fl	Pre Fixture Description	Pre Qty	Pre kW	Post Fixture Description	Post Qty	Post kW	Annual Hours	*Control Description*	*Control Qty*	Control kWH Saved
IN	161	George Washingto	Bath 111Ao	1	60W INCANDESCENT	1	0.1	11 WATT LED SI/LED10Par20/D	1	0.0	3,640	OCC SENSOR WALLSWITCH	1	12
IN	162	George Washingto	Closet 111Bs	1	2x100W INCANDESCENT	4	0.8	1L4' T8 28w/ELEE HI/NEW	4	0.1	500	TIMER WALLSWITCH 1GANG	1	20
IN	163	George Washingto	Gym 112 Aux	1	2L4' T12 EE/EEMAG	32	2.2	2L4' T8 28w/ELEE LO	32	1.3	3,440	OCC SENSOR CEILING	1	1,387
IN	164	George Washingto	Gym 112 Aux	1	100W INCANDESCENT	2	0.2	23W COMPACT SI/29712/CF23I	2	0.0	3,440	INCLUDED ABOVE		47
IN	165	George Washingto	Closet 112As	1	2L4' T8 32w/EL	1	0.1	1L4' T8 28w/ELEE HI/NEW	1	0.0	500	OCC SENSOR WALLSWITCH	1	5
IN	166	George Washingto	Hall 110 Music	1	1L4' T8 32w/EL	1	0.0	1L4' T8 28w/ELEE HI/NEW	1	0.0	3,640	OCC SENSOR WALLSWITCH	1	36
IN	167	George Washingto	Classroom 110 Music	1	4L4' T8 32w/EL-8'	12	1.3	4L4' T8 28w/ELEE LO-8'	12	1.0	2,840	OCC SENSOR CORNER MT.	1	849
IN	168	George Washingto	Office 110Ap	1	4L4' T12 EE/EEMAG	1	0.1	2L4' T8 28w/ELEE HI/NEW	1	0.1	2,840	OCC SENSOR WALLSWITCH	1	55
IN	169	George Washingto	Office 110Bp	1	4L4' T12 EE/EEMAG	1	0.1	2L4' T8 28w/ELEE HI/NEW	1	0.1	2,840	OCC SENSOR WALLSWITCH	1	55
IN	170	George Washingto	Office 110Cp	1	4L4' T12 EE/EEMAG	1	0.1	2L4' T8 28w/ELEE HI/NEW	1	0.1	2,840	OCC SENSOR WALLSWITCH	1	55
IN	171	George Washingto	Storage Instruments	1	100W INCANDESCENT	1	0.1	23W COMPACT SI/29712/CF23I	1	0.0	500	NO RETRO		
IN	172	George Washingto	Classroom 109 Music	1	4L4' T12 EE/EEMAG-8'	12	1.7	2L4' T8 28w/ELEE HI/NEW-8'	12	0.8	2,840	OCC SENSOR CORNER MT.	1	654
IN	173	George Washingto	Hall 109 Music	1	2L4' T12 EE/EEMAG-8'	2	0.1	2L4' T8 28w/ELEE HI/NEW-8'	2	0.1	3,640	OCC SENSOR WALLSWITCH	1	140
IN	174	George Washingto	Office Ao109	1	4L4' T12 EE/EEMAG-8'	3	0.4	2L4' T8 28w/ELEE HI/NEW-8'	3	0.2	2,840	OCC SENSOR CEILING	1	164
IN	175	George Washingto	Storage As108	1	2L4' T12 EE/EEMAG	4	0.3	1L4' T8 28w/ELEE HI/NEW	4	0.1	500	TIMER WALLSWITCH 1GANG	1	20
IN	176	George Washingto	Storage Storeroom	1	2L4' T12 EE/EEMAG	2	0.1	1L4' T8 28w/ELEE HI/NEW	2	0.1	500	OCC SENSOR WALLSWITCH	1	10
IN	177	George Washingto	Classroom 108	1	3L4' T8 32w/EL	8	0.7	2L4' T8 28w/ELEE HI/RFL	8	0.5	1,988	ALREADY EXISTS		
IN	178	George Washingto	Classroom 108	1	3L2' F40 BIAX/EL	1	0.1	2L2' T8 15w/ELEE HI/RFL	1	0.0	1,988	ALREADY EXISTS		
IN	179	George Washingto	Classroom 107	1	3L4' T8 32w/EL	8	0.7	2L4' T8 28w/ELEE HI/RFL	8	0.5	1,988	ALREADY EXISTS		
IN	180	George Washingto	Classroom 107	1	3L2' F40 BIAX/EL	1	0.1	2L2' T8 15w/ELEE HI/RFL	1	0.0	1,988	ALREADY EXISTS		
IN	181	George Washingto	Classroom 106	1	3L4' T8 32w/EL	13	1.1	2L4' T8 28w/ELEE HI/RFL	13	0.8	1,988	ALREADY EXISTS		
IN	182	George Washingto	Classroom 106	1	3L2' F40 BIAX/EL	1	0.1	2L2' T8 15w/ELEE HI/RFL	1	0.0	1,988	ALREADY EXISTS		
IN	183	George Washingto	Closet Bs106	1	2L4' T8 32w/EL	4	0.2	1L4' T8 28w/ELEE HI/NEW	4	0.1	500	OCC SENSOR WALLSWITCH	1	20
IN	184	George Washingto	Classroom 105 Wood Shop	1	2L4' T8 32w/EL	50	3.0	1L4' T8 28w/ELEE HI/NEW	50	1.7	2,840	NO RETRO		
IN	185	George Washingto	Stage	1	150W METAL HALIDE	6	1.1	2L4' T8 28w/ELEE/NEW	6	0.3	3,240	NO RETRO		
IN	186	George Washingto	Stage	1	72W COMPACT SCREWIN	4	0.3	NO RETRO		0.3	3,240	NO RETRO		
IN	187	George Washingto	Auditorium Seating Area	1	4L4' T12 EE/EEMAG	15	2.1	2L4' T8 28w/ELEE HI/RFL	15	1.0	3,240	NO RETRO		
IN	188	George Washingto	Auditorium Seating Area	1	32W COMPACT SCREWIN	4	0.1	NO RETRO		0.1	3,240	NO RETRO		
IN	189	George Washingto	Auditorium Seating Area	1	32W COMPACT SCREWIN	2	0.1	NO RETRO		0.1	3,240	NO RETRO		
IN	190	George Washingto	Auditorium Seating Area	1	40W INCANDESCENT	2	0.1	3 WATT LED/KIT	2	0.0	3,240	NO RETRO		
IN	191	George Washingto	Storage Av Equipment	1	2L4' T8 32w/EL	2	0.1	1L4' T8 28w/ELEE HI/NEW	2	0.1	500	NO RETRO		
IN	192	George Washingto	Storage Equipment	1	2L4' T8 32w/EL	2	0.1	1L4' T8 28w/ELEE HI/NEW	2	0.1	500	NO RETRO		
IN	193	George Washingto	Auditorium Sound Booth	1	100W INCANDESCENT	2	0.2	21 WATT LED SI/LED21Par38/D	2	0.0	3,240	NO RETRO		
IN	194	George Washingto	Closet Sound Booth	1	100W INCANDESCENT	1	0.1	23W COMPACT SI/29712/CF23I	1	0.0	500	NO RETRO		
IN	195	George Washingto	Mechanical 103	1	1L4' T12 EE/EEMAG	1	0.0	1L4' T8 28w/ELEE LO/STRIP KI	1	0.0	500	NO RETRO		
IN	196	George Washingto	Office 102 Nurse	1	4L4' T12 EE/EEMAG	2	0.3	2L4' T8 28w/ELEE HI/NEW	2	0.1	2,840	OCC SENSOR WALLSWITCH	1	109
IN	197	George Washingto	Office 102Jo	1	4L4' T12 EE/EEMAG	2	0.3	2L4' T8 28w/ELEE HI/NEW	2	0.1	2,840	OCC SENSOR CEILING	1	109
IN	198	George Washingto	Office Open Nurse	1	4L4' T12 EE/EEMAG	6	0.8	2L4' T8 28w/ELEE HI/NEW	6	0.4	3,440	OCC SENSOR CEILING	1	396
IN	199	George Washingto	Office Open Nurse	1	2x13W COMPACT HARDV	2	0.1	NO RETRO		0.1	3,440	NO RETRO		
IN	200	George Washingto	Bath 102Tr	1	2x13W COMPACT HARDV	1	0.0	NO RETRO		0.0	3,640	OCC SENSOR WALLSWITCH	1	33

In or Out	Line	Building Name	Location	Fl	Pre Fixture Description	Pre Qty	Pre kW	Post Fixture Description	Post Qty	Post kW	Annual Hours	*Control Description*	*Control Qty*	Control kWH Saved
IN	201	George Washingto	Office 101Io	1	4L4' T12 EE/EEMAG	2	0.3	2L4' T8 28w/ELEE HI/NEW	2	0.1	2,840	OCC SENSOR WALLSWITCH	1	109
IN	202	George Washingto	Office 101Fo	1	4L4' T12 EE/EEMAG	4	0.6	2L4' T8 28w/ELEE HI/NEW	4	0.3	2,840	OCC SENSOR WALLSWITCH	1	218
IN	203	George Washingto	Office 101Ho	1	4L4' T12 EE/EEMAG	2	0.3	2L4' T8 28w/ELEE HI/NEW	2	0.1	2,840	OCC SENSOR WALLSWITCH	1	109
IN	204	George Washingto	Office 101Eo	1	4L4' T8 32w/EL	4	0.4	2L4' T8 28w/ELEE HI/RFL	4	0.3	2,840	OCC SENSOR CEILING	1	218
IN	205	George Washingto	Office 101Go	1	4L4' T12 EE/EEMAG	2	0.3	2L4' T8 28w/ELEE HI/NEW	2	0.1	2,840	OCC SENSOR WALLSWITCH	1	109
IN	206	George Washingto	Office 101Do	1	4L4' T12 EE/EEMAG	2	0.3	2L4' T8 28w/ELEE HI/NEW	2	0.1	2,840	OCC SENSOR WALLSWITCH	1	109
IN	207	George Washingto	Hall 101Fo To 101Do	1	2L4' T8 32w/EL	3	0.2	1L4' T8 28w/ELEE HI/NEW	3	0.1	3,640	NO RETRO		
IN	208	George Washingto	Office Main	1	4L4' T12 EE/EEMAG	12	1.7	2L4' T8 28w/ELEE HI/NEW	12	0.8	2,840	NO RETRO		
IN	209	George Washingto	Storage 101Co	1	4L4' T8 32w/EL	2	0.2	2L4' T8 28w/ELEE HI/RFL	2	0.1	2,440	OCC SENSOR WALLSWITCH	1	94
IN	210	George Washingto	Conference 101Bo	1	4L4' T12 EE/EEMAG	4	0.6	2L4' T8 28w/ELEE HI/NEW	4	0.3	2,840	OCC SENSOR WALLSWITCH	1	218
IN	211	George Washingto	Office 101Ao	1	4L4' T12 EE/EEMAG	2	0.3	2L4' T8 28w/ELEE HI/NEW	2	0.1	2,840	NO RETRO		
IN	212	George Washingto	Bath Mt101	1	2L4' T8 32w/EL	1	0.1	2L4' T8 28w/ELEE LO	1	0.0	3,640	OCC SENSOR WALLSWITCH	1	46
IN	213	George Washingto	Bath Mt101	1	2L2' T8 17w/EL	1	0.0	2L2' T8 15w/ELEE LO/NEW	1	0.0	3,640	INCLUDED ABOVE		26
IN	214	George Washingto	Closet Cc101	1	2L4' T8 32w/EL	1	0.1	1L4' T8 28w/ELEE HI/NEW	1	0.0	500	OCC SENSOR WALLSWITCH	1	5
IN	215	George Washingto	Bath Wt101	1	2L4' T12 U EE/EEMAG	1	0.1	2L2' T8 15w/ELEE HI/RFL	1	0.0	3,640	OCC SENSOR WALLSWITCH	1	36
IN	216	George Washingto	Bath Wt101	1	2L2' T12 STD/STD	1	0.1	2L2' T8 15w/ELEE LO/NEW	1	0.0	3,640	INCLUDED ABOVE		26
IN	217	George Washingto	Bath Wt101	1	100W INCANDESCENT	1	0.1	21 WATT LED SI/LED21Par38/D	1	0.0	3,640	INCLUDED ABOVE		23
IN	218	George Washingto	Storage By Auditorium	1	2L4' T12 EE/EEMAG-8'	1	0.1	2L4' T8 28w/ELEE LO/STRIP KI	1	0.0	500	OCC SENSOR WALLSWITCH	1	6
IN	219	George Washingto	Storage At104 Ticket Booth	1	2L4' T12 EE/EEMAG-8'	1	0.1	2L4' T8 28w/ELEE LO/STRIP KI	1	0.0	500	OCC SENSOR WALLSWITCH	1	6
IN	220	George Washingto	Bath Bt141	1	2L2' F40 BIAX/EL	1	0.1	2L2' F40BIAX/EL28W	1	0.1	3,640	OCC SENSOR CEIL DT 1GAN	1	69
IN	221	George Washingto	Bath Bt141	1	2L4' T8 32w/EL	2	0.1	2L4' T8 28w/ELEE LO	2	0.1	3,640	INCLUDED ABOVE		92
IN	222	George Washingto	Bath Bt141	1	2L4' T8 32w/EL	1	0.1	2L4' T8 28w/ELEE LO/NEW	1	0.0	3,640	INCLUDED ABOVE		46
IN	223	George Washingto	Bath Gt141	1	2L4' T8 32w/EL	4	0.2	2L4' T8 28w/ELEE LO	4	0.2	3,640	OCC SENSOR CEIL DT 1GAN	1	183
IN	224	George Washingto	Classroom 140	1	4L4' T12 EE/EEMAG-8'	9	1.3	2L4' T8 28w/ELEE HI/NEW-8'	9	0.6	2,840	OCC SENSOR CEILING	1	491
IN	225	George Washingto	Office 141	1	4L4' T12 EE/EEMAG-8'	2	0.3	2L4' T8 28w/ELEE HI/NEW-8'	2	0.1	2,840	OCC SENSOR CEILING	1	109
IN	226	George Washingto	Closet As141	1	2L4' T12 EE/EEMAG	2	0.1	1L4' T8 28w/ELEE HI/NEW	2	0.1	500	OCC SENSOR WALLSWITCH	1	10
IN	227	George Washingto	Closet Bs141	1	2L4' T12 EE/EEMAG	2	0.1	1L4' T8 28w/ELEE HI/NEW	2	0.1	500	OCC SENSOR WALLSWITCH	1	10
IN	228	George Washingto	Classroom 139	1	4L4' T12 EE/EEMAG-8'	7	1.0	2L4' T8 28w/ELEE HI/NEW-8'	7	0.4	2,840	OCC SENSOR CEILING	1	382
IN	229	George Washingto	Classroom 139	1	2L4' T12 EE/EEMAG	2	0.1	1L4' T8 28w/ELEE HI/NEW	2	0.1	2,840	INCLUDED ABOVE		56
IN	230	George Washingto	Classroom 138	1	4L4' T12 EE/EEMAG-8'	9	1.3	2L4' T8 28w/ELEE HI/NEW-8'	9	0.6	2,840	OCC SENSOR CEILING	1	491
IN	231	George Washingto	Classroom 137	1	4L4' T12 EE/EEMAG-8'	9	1.3	2L4' T8 28w/ELEE HI/NEW-8'	9	0.6	2,840	OCC SENSOR CEILING	1	491
IN	232	George Washingto	Storage Server	1	4L4' T12 EE/EEMAG	2	0.3	2L4' T8 28w/ELEE HI/RFL	2	0.1	2,440	OCC SENSOR WALLSWITCH	1	94
IN	233	George Washingto	Office 128Ao	1	4L4' T8 32w/EL	2	0.2	2L4' T8 28w/ELEE HI/RFL	2	0.1	2,840	OCC SENSOR WALLSWITCH	3	109
IN	234	George Washingto	Lounge Media Center Staff	1	4L4' T12 EE/EEMAG	6	0.8	2L4' T8 28w/ELEE HI/NEW	6	0.4	2,520	OCC SENSOR CEILING	2	290
IN	235	George Washingto	Library Media Center Staff	1	4L4' T12 EE/EEMAG	19	2.7	2L4' T8 28w/ELEE/RFL	19	0.9	2,840	OCC SENSOR CEILING	4	777
IN	236	George Washingto	Library Media Center Staff	1	2L4' T8 32w/EL	18	1.1	2L4' T8 28w/ELEE/RFL	18	0.9	2,840	INCLUDED ABOVE		736
IN	237	George Washingto	Hall 1A	1	3L2' T8 17w/EL	27	1.3	3L2' T8 15w/ELEE LO	27	1.1	3,640	NO RETRO		
IN	238	George Washingto	Hall By Court Yard	1	3L2' T8 17w/EL	6	0.3	3L2' T8 15w/ELEE LO	6	0.2	3,640	DAYLIGHT HARVESTING SYS	6	426
IN	239	George Washingto	Hall 1B	1	6L2' T12 STD/STD	8	1.3	6L2' T8 15w/ELEE LO	8	0.6	3,640	NO RETRO		
IN	240	George Washingto	Classroom 105 Wood Shop	1	2L8' T12 HO STD/EL	20	3.9	4L4' T8 28w/ELEE HI/NEW-8'	20	2.5	2,840	NO RETRO		

In or Out	Line	Building Name	Location	Fl	Pre Fixture Description	Pre Qty	Pre kW	Post Fixture Description	Post Qty	Post kW	Annual Hours	*Control Description*	*Control Qty*	Control kWH Saved
IN	241	George Washingto	Office 105Ao	1	4L4' T12 EE/EEMAG-8'	1	0.1	2L4' T8 28w/ELEE HI/NEW-8'	1	0.1	2,840	OCC SENSOR CEILING	1	55
IN	242	George Washingto	Closet 105Bs	1	2L4' T8 32w/EL-8'	1	0.1	2L4' T8 28w/ELEE LO/STRIP KI	1	0.0	500	TIMER WALLSWITCH 1GANG	1	6
IN	243	George Washingto	Closet 105Bs	1	4L4' T12 EE/EEMAG	1	0.1	2L4' T8 28w/ELEE HI/NEW	1	0.1	500	INCLUDED ABOVE		10
IN	244	George Washingto	Closet 105Sc	1	2L4' T8 32w/EL	1	0.1	1L4' T8 28w/ELEE HI/NEW	1	0.0	500	TIMER WALLSWITCH 1GANG	1	5
IN	245	George Washingto	Hall 1D	1	6L2' T12 STD/STD	21	3.5	6L2' T8 15w/ELEE LO	21	1.6	3,640	NO RETRO		
IN	246	George Washingto	Hall 1D	1	6L4' T12 EE/EEMAG	1	0.2	6L4' T8 28w/ELEE LO	1	0.1	3,640	NO RETRO		
IN	247	George Washingto	Hall Display Case	1	2L4' T12 EE/EEMAG	2	0.1	2L4' T8 28w/ELEE LO	2	0.1	3,640	NO RETRO		
IN	248	George Washingto	Hall Display Case	1	2L4' T8 U/EL	1	0.1	2L2' T8 15w/ELEE HI/RFL	1	0.0	3,640	NO RETRO		
IN	249	George Washingto	Hall Display Case	1	3L2' T8 17w/EL	1	0.0	3L2' T8 15w/ELEE LO	1	0.0	3,640	NO RETRO		
IN	250	George Washingto	Hall 1F	1	3L4' T8 32w/EL	2	0.2	3L4' T8 28w/ELEE LO	2	0.1	3,640	NO RETRO		
IN	251	George Washingto	Hall 1F	1	3L4' T8 32w/EL	3	0.3	3L4' T8 28w/ELEE LO	3	0.2	3,640	DAYLIGHT HARVESTING SYS	3	344
IN	252	George Washingto	Hall 1G	1	3L4' T8 32w/EL	2	0.2	3L4' T8 28w/ELEE LO	2	0.1	3,640	NO RETRO		
IN	253	George Washingto	Hall 1G	1	2L4' T12 EE/EEMAG	26	1.8	2L4' T8 28w/ELEE LO	26	1.1	3,640	DAYLIGHT HARVESTING SYS	26	1,987
IN	254	George Washingto	Hall 1E	1	3L4' T12 EE/EEMAG	3	0.3	3L4' T8 28w/ELEE LO	3	0.2	3,640	NO RETRO		
IN	255	George Washingto	Hall 1E	1	4L4' T12 EE/EEMAG	2	0.3	2L4' T8 28w/ELEE HI/RFL	2	0.1	3,640	NO RETRO		
IN	256	George Washingto	Hall 1C	1	3L4' T8 32w/EL	5	0.4	3L4' T8 28w/ELEE LO	5	0.3	3,640	NO RETRO		
IN	257	George Washingto	Bldg Mt Fixture 1	ext	50W HI PRESSURE SODI	2	0.1	26 WATT LED/NEW	2	0.1	4,380	NO RETRO		
IN	258	George Washingto	Bldg Mt Fixture 2	ext	150W HI PRESSURE SOD	2	0.4	70 WATT LED/NEW	2	0.1	4,380	NO RETRO		
IN	259	George Washingto	Bldg Mt Fixture 3	ext	150W HI PRESSURE SOD	1	0.2	70 WATT LED/NEW	1	0.1	4,380	NO RETRO		
IN	260	George Washingto	Bldg Mt Fixture 4	ext	150W HI PRESSURE SOD	1	0.2	70 WATT LED/NEW	1	0.1	4,380	NO RETRO		
IN	261	George Washingto	Bldg Mt Fixture 5	ext	150W HI PRESSURE SOD	1	0.2	70 WATT LED/NEW	1	0.1	4,380	NO RETRO		
IN	262	George Washingto	Bldg Mt Fixture 6	ext	50W HI PRESSURE SODI	2	0.1	26 WATT LED/NEW	2	0.1	4,380	NO RETRO		
IN	263	George Washingto	Bldg Mt Fixture 7	ext	50W HI PRESSURE SODI	1	0.1	26 WATT LED/NEW	1	0.0	4,380	NO RETRO		
IN	264	George Washingto	Bldg Mt Fixture 8	ext	150W HI PRESSURE SOD	1	0.2	70 WATT LED/NEW	1	0.1	4,380	NO RETRO		
IN	265	George Washingto	Bldg Mt Fixture 9	ext	50W HI PRESSURE SODI	2	0.1	26 WATT LED/NEW	2	0.1	4,380	NO RETRO		
IN	266	George Washingto	Bldg Mt Fixture 10	ext	250W METAL HALIDE	4	1.2	133 WATT LED/NEW	4	0.5	4,380	NO RETRO		
IN	267	George Washingto	Bldg Mt Fixture 11	ext	100W HI PRESSURE SOD	1	0.1	50 WATT LED/NEW	1	0.1	4,380	NO RETRO		
IN	268	George Washingto	Bldg Mt Fixture 12	ext	60W INCANDESCENT	4	0.2	11W COMPACT SI/29708/CF11I	4	0.0	4,380	NO RETRO		
IN	269	George Washingto	Bldg Mt Fixture 13	ext	90W INCANDESCENT	4	0.4	49 WATT LED/NEW	4	0.2	4,380	NO RETRO		
IN	270	George Washingto	Storage Portable	1	2L4' T12 EE/EEMAG	34	2.4	1L4' T8 28w/ELEE HI/NEW	34	1.1	500	NO RETRO		
IN	271	Packanack-Elemer	Classroom 24	1	4L4' T8 32w/EL-8'	9	1.0	2L4' T8 28w/ELEE HI/NEW-8'	9	0.6	2,520	OCC SENSOR CEILING	1	435
IN	272	Packanack-Elemer	Bath 24	1	2x13W COMPACT HARDV	1	0.0	NO RETRO		0.0	3,320	NO RETRO		
IN	273	Packanack-Elemer	Classroom 25	1	4L4' T8 32w/EL-8'	10	1.1	2L4' T8 28w/ELEE HI/NEW-8'	10	0.6	2,520	OCC SENSOR CEILING	1	484
IN	274	Packanack-Elemer	Bath 25	1	2x13W COMPACT HARDV	1	0.0	NO RETRO		0.0	3,320	NO RETRO		
IN	275	Packanack-Elemer	Storage 25	1	2L4' T12 EE/EEMAG	1	0.1	1L4' T8 28w/ELEE HI/NEW	1	0.0	500	TIMER WALLSWITCH 1GANG	1	5
IN	276	Packanack-Elemer	Classroom 23	1	4L4' T8 32w/EL-8'	9	1.0	2L4' T8 28w/ELEE HI/NEW-8'	9	0.6	2,520	OCC SENSOR CEILING	1	435
IN	277	Packanack-Elemer	Bath 23	1	2x13W COMPACT HARDV	1	0.0	NO RETRO		0.0	3,320	NO RETRO		
IN	278	Packanack-Elemer	Classroom 26	1	4L4' T8 32w/EL-8'	10	1.1	2L4' T8 28w/ELEE HI/NEW-8'	10	0.6	2,520	OCC SENSOR CEILING	1	484
IN	279	Packanack-Elemer	Bath 26	1	2x13W COMPACT HARDV	1	0.0	NO RETRO		0.0	3,320	NO RETRO		
IN	280	Packanack-Elemer	Storage 26	1	2L4' T12 EE/EEMAG	1	0.1	1L4' T8 28w/ELEE HI/NEW	1	0.0	500	TIMER WALLSWITCH 1GANG	1	5

In or Out	Line	Building Name	Location	Fl	Pre Fixture Description	Pre Qty	Pre kW	Post Fixture Description	Post Qty	Post kW	Annual Hours	*Control Description*	*Control Qty*	Control kWH Saved
IN	281	Packanack-Elemer	Classroom 23	1	4L4' T8 32w/EL-8'	9	1.0	2L4' T8 28w/ELEE HI/NEW-8'	9	0.6	2,520	OCC SENSOR CEILING	1	435
IN	282	Packanack-Elemer	Bath 23	1	2x13W COMPACT HARDV	1	0.0	NO RETRO		0.0	3,320	NO RETRO		
IN	283	Packanack-Elemer	Classroom 21	1	4L4' T8 32w/EL-8'	9	1.0	2L4' T8 28w/ELEE HI/NEW-8'	9	0.6	2,520	OCC SENSOR CEILING	1	435
IN	284	Packanack-Elemer	Bath 21	1	2x13W COMPACT HARDV	1	0.0	NO RETRO		0.0	3,320	NO RETRO		
IN	285	Packanack-Elemer	Classroom 27	1	4L4' T8 32w/EL-8'	10	1.1	2L4' T8 28w/ELEE HI/NEW-8'	10	0.6	2,520	OCC SENSOR CEILING	1	484
IN	286	Packanack-Elemer	Bath 27	1	2x13W COMPACT HARDV	1	0.0	NO RETRO		0.0	3,320	NO RETRO		
IN	287	Packanack-Elemer	Storage 27	1	2L4' T12 EE/EEMAG	1	0.1	1L4' T8 28w/ELEE HI/NEW	1	0.0	500	TIMER WALLSWITCH 1GANG	1	5
IN	288	Packanack-Elemer	Classroom 20	1	4L4' T8 32w/EL-8'	9	1.0	2L4' T8 28w/ELEE HI/NEW-8'	9	0.6	2,520	OCC SENSOR CEILING	1	435
IN	289	Packanack-Elemer	Bath 20	1	2x13W COMPACT HARDV	1	0.0	NO RETRO		0.0	3,320	NO RETRO		
IN	290	Packanack-Elemer	Lounge Teachers	1	6L2' T12 STD/STD	6	1.0	6L2' T8 15w/ELEE LO	6	0.5	2,520	OCC SENSOR CEILING	1	354
IN	291	Packanack-Elemer	Hall 25 To 20	1	3L4' T8 32w/EL	10	0.9	3L4' T8 28w/ELEE LO	10	0.6	3,620	NO RETRO		
IN	292	Packanack-Elemer	Bath Girls	1	13W COMPACT HARDWIF	4	0.1	NO RETRO		0.1	3,320	OCC SENSOR WALLSWITCH	1	60
IN	293	Packanack-Elemer	Bath Girls	1	2L2' T8 17w/EL	1	0.0	2L2' T8 15w/ELEE LO/NEW	1	0.0	3,320	INCLUDED ABOVE		24
IN	294	Packanack-Elemer	Closet Clean	1	2x60W INCANDESCENTS	1	0.1	2L2' T8 15w/ELEE LO/NEW	1	0.0	500	OCC SENSOR WALLSWITCH	1	4
IN	295	Packanack-Elemer	Bath Boys	1	13W COMPACT HARDWIF	4	0.1	NO RETRO		0.1	3,320	OCC SENSOR WALLSWITCH	1	60
IN	296	Packanack-Elemer	Bath Boys	1	2L2' T8 17w/EL	1	0.0	2L2' T8 15w/ELEE LO/NEW	1	0.0	3,320	INCLUDED ABOVE		24
IN	297	Packanack-Elemer	Cafeteria Seating Area	1	4L4' T8 32w/EL	4	0.4	2L4' T8 28w/ELEE HI/NEW	4	0.3	2,720	NO RETRO		
IN	298	Packanack-Elemer	Cafeteria Seating Area	1	4L4' T12 EE/EEMAG	33	4.6	2L4' T8 28w/ELEE HI/NEW	33	2.1	2,720	NO RETRO		
IN	299	Packanack-Elemer	Storage Dry Goods	1	2L4' T12 EE/EEMAG	1	0.1	1L4' T8 28w/ELEE HI/NEW	1	0.0	500	OCC SENSOR WALLSWITCH	1	5
IN	300	Packanack-Elemer	Kitchen Prep Area	1	4L4' T8 32w/EL-8'	1	0.1	4L4' T8 28w/ELEE LO/NEW-8'	1	0.1	1,920	NO RETRO		
IN	301	Packanack-Elemer	Kitchen Prep Area	1	2L4' T12 EE/EEMAG	4	0.3	2L4' T8 28w/ELEE LO/NEW	4	0.2	1,920	NO RETRO		
IN	302	Packanack-Elemer	Kitchen Prep Area	1	4L4' T12 EE/EEMAG-8'	5	0.7	4L4' T8 28w/ELEE LO/NEW-8'	5	0.4	1,920	NO RETRO		
IN	303	Packanack-Elemer	Hall Kitchen	1	3L4' T8 32w/EL	1	0.1	3L4' T8 28w/ELEE LO	1	0.1	3,620	NO RETRO		
IN	304	Packanack-Elemer	Hall Kitchen	1	4L4' T12 EE/EEMAG-8'	1	0.1	2L4' T8 28w/ELEE HI/NEW-8'	1	0.1	3,620	NO RETRO		
IN	305	Packanack-Elemer	Hall Kitchen	1	3L2' T8 17w/EL	1	0.0	3L2' T8 15w/ELEE LO	1	0.0	3,620	NO RETRO		
IN	306	Packanack-Elemer	Closet Incinerator	1	2x60W INCANDESCENTS	1	0.1	2L2' T8 15w/ELEE LO/NEW	1	0.0	500	NO RETRO		
IN	307	Packanack-Elemer	Classroom 18	1	4L4' T8 32w/EL-8'	8	0.9	2L4' T8 28w/ELEE HI/NEW-8'	8	0.5	2,520	OCC SENSOR CEILING	1	387
IN	308	Packanack-Elemer	Classroom 18	1	2L4' T8 32w/EL	1	0.1	1L4' T8 28w/ELEE HI/NEW	1	0.0	2,520	NO RETRO		
IN	309	Packanack-Elemer	Bath 18	1	13W COMPACT HARDWIF	1	0.0	NO RETRO		0.0	3,320	TIMER WALLSWITCH 1GANG	1	15
IN	310	Packanack-Elemer	Classroom 19	1	4L4' T8 32w/EL-8'	8	0.9	2L4' T8 28w/ELEE HI/NEW-8'	8	0.5	2,520	OCC SENSOR CEILING	1	387
IN	311	Packanack-Elemer	Classroom 19	1	2L4' T8 32w/EL	1	0.1	1L4' T8 28w/ELEE HI/NEW	1	0.0	2,520	NO RETRO		
IN	312	Packanack-Elemer	Bath 19	1	13W COMPACT HARDWIF	1	0.0	NO RETRO		0.0	3,320	TIMER WALLSWITCH 1GANG	1	15
IN	313	Packanack-Elemer	Classroom 16	1	4L4' T8 32w/EL-8'	8	0.9	2L4' T8 28w/ELEE HI/NEW-8'	8	0.5	2,520	OCC SENSOR CEILING	1	387
IN	314	Packanack-Elemer	Classroom 16	1	2L4' T8 32w/EL	1	0.1	1L4' T8 28w/ELEE HI/NEW	1	0.0	2,520	NO RETRO		
IN	315	Packanack-Elemer	Bath 16	1	13W COMPACT HARDWIF	1	0.0	NO RETRO		0.0	3,320	TIMER WALLSWITCH 1GANG	1	15
IN	316	Packanack-Elemer	Classroom 17	1	4L4' T8 32w/EL-8'	8	0.9	2L4' T8 28w/ELEE HI/NEW-8'	8	0.5	2,520	OCC SENSOR CEILING	1	387
IN	317	Packanack-Elemer	Classroom 17	1	2L4' T8 32w/EL	1	0.1	1L4' T8 28w/ELEE HI/NEW	1	0.0	2,520	NO RETRO		
IN	318	Packanack-Elemer	Bath 17	1	13W COMPACT HARDWIF	1	0.0	NO RETRO		0.0	3,320	TIMER WALLSWITCH 1GANG	1	15
IN	319	Packanack-Elemer	Office Nurse	1	4L4' T8 32w/EL-8'	2	0.2	2L4' T8 28w/ELEE HI/NEW-8'	2	0.1	2,320	OCC SENSOR CEILING	1	89
IN	320	Packanack-Elemer	Bath Nurse	1	2L4' T8 32w/EL	1	0.1	2L4' T8 28w/ELEE LO/NEW	1	0.0	3,320	OCC SENSOR WALLSWITCH	1	42

In or Out	Line	Building Name	Location	Fl	Pre Fixture Description	Pre Qty	Pre kW	Post Fixture Description	Post Qty	Post kW	Annual Hours	*Control Description*	*Control Qty*	Control kWH Saved
IN	321	Packanack-Elemer	Classroom 15	1	3L4' T8 32w/EL	7	0.6	2L4' T8 28w/ELEE HI/RFL	7	0.4	2,520	NO RETRO		
IN	322	Packanack-Elemer	Bath 15	1	60W INCANDESCENT	1	0.1	1L2' T8 15w/ELEE LO/NEW	1	0.0	3,320	OCC SENSOR WALLSWITCH	1	14
IN	323	Packanack-Elemer	Storage Supplies	1	60W INCANDESCENT	1	0.1	1L2' T8 15w/ELEE LO/NEW	1	0.0	500	OCC SENSOR WALLSWITCH	1	2
IN	324	Packanack-Elemer	Classroom 14	1	4L4' T8 32w/EL-8'	6	0.7	2L4' T8 28w/ELEE HI/NEW-8'	6	0.4	2,520	OCC SENSOR CEILING	1	290
IN	325	Packanack-Elemer	Classroom 11	1	4L4' T8 32w/EL-8'	8	0.9	2L4' T8 28w/ELEE HI/NEW-8'	8	0.5	2,520	NO RETRO		
IN	326	Packanack-Elemer	Storage 11	1	60W INCANDESCENT	1	0.1	2L2' T8 15w/ELEE LO/NEW	1	0.0	500	OCC SENSOR WALLSWITCH	1	4
IN	327	Packanack-Elemer	Bath 11	1	2L4' T12 EE/EEMAG	1	0.1	1L4' T8 28w/ELEE HI/NEW	1	0.0	3,320	OCC SENSOR WALLSWITCH	1	33
IN	328	Packanack-Elemer	Classroom 13	1	4L4' T8 32w/EL-8'	6	0.7	2L4' T8 28w/ELEE HI/NEW-8'	6	0.4	2,520	OCC SENSOR CEILING	1	290
IN	329	Packanack-Elemer	Bath 13	1	60W INCANDESCENT	1	0.1	1L2' T8 15w/ELEE LO/NEW	1	0.0	3,320	OCC SENSOR WALLSWITCH	1	14
IN	330	Packanack-Elemer	Hall 12 To 18	1	2L4' T8 32w/EL	4	0.2	1L4' T8 28w/ELEE HI/NEW	4	0.1	3,620	NO RETRO		
IN	331	Packanack-Elemer	Hall 12 To 18	1	3L2' T8 17w/EL	2	0.1	3L2' T8 15w/ELEE LO	2	0.1	3,620	NO RETRO		
IN	332	Packanack-Elemer	Hall 12 To 18	1	3L4' T8 32w/EL	5	0.4	3L4' T8 28w/ELEE LO	5	0.3	3,620	NO RETRO		
IN	333	Packanack-Elemer	Library 12 To 18	1	4L4' T12 EE/EEMAG	37	5.2	2L4' T8 28w/ELEE HI/RFL	37	2.4	2,520	OCC SENSOR CEILING	6	1,790
IN	334	Packanack-Elemer	Library 12 To 18	1	4L4' T8 32w/EL	4	0.4	2L4' T8 28w/ELEE HI/RFL	4	0.3	2,520	INCLUDED ABOVE		194
IN	335	Packanack-Elemer	Library 12 To 18	1	175W METAL HALIDE	4	0.8	NO RETRO		0.8	2,520	INCLUDED ABOVE		620
IN	336	Packanack-Elemer	Library 12 To 18	1	2L4' T12 U EE/EEMAG	3	0.2	2L2' T8 15w/ELEE HI/RFL	3	0.1	2,520	INCLUDED ABOVE		75
IN	337	Packanack-Elemer	Office Library	1	4L4' T12 EE/EEMAG	4	0.6	2L4' T8 28w/ELEE HI/RFL	4	0.3	2,320	OCC SENSOR CEILING	1	178
IN	338	Packanack-Elemer	Storage Server	1	2L4' T12 EE/EEMAG	2	0.1	1L4' T8 28w/ELEE HI/NEW	2	0.1	500	OCC SENSOR WALLSWITCH	1	10
IN	339	Packanack-Elemer	Storage Sprinkler Room	1	4L4' T8 32w/EL	2	0.2	2L4' T8 28w/ELEE HI/RFL	2	0.1	500	OCC SENSOR WALLSWITCH	1	19
IN	340	Packanack-Elemer	Hall By Library	1	4L4' T12 EE/EEMAG	5	0.7	2L4' T8 28w/ELEE HI/RFL	5	0.3	3,620	OCC SENSOR CEILING	2	348
IN	341	Packanack-Elemer	Classroom 103B	1	4L4' T12 EE/EEMAG	6	0.8	2L4' T8 28w/ELEE HI/RFL	6	0.4	2,520	OCC SENSOR CEILING	1	290
IN	342	Packanack-Elemer	Classroom 103A	1	4L4' T12 EE/EEMAG	6	0.8	2L4' T8 28w/ELEE HI/RFL	6	0.4	2,520	OCC SENSOR CEILING	1	290
IN	343	Packanack-Elemer	Hall 103B To 100	1	4L4' T12 EE/EEMAG	12	1.7	2L4' T8 28w/ELEE HI/RFL	12	0.8	3,620	NO RETRO		
IN	344	Packanack-Elemer	Classroom 102	1	4L4' T12 EE/EEMAG	14	2.0	2L4' T8 28w/ELEE HI/RFL	14	0.9	2,520	OCC SENSOR CEILING	1	677
IN	345	Packanack-Elemer	Classroom 101B	1	4L4' T12 EE/EEMAG	6	0.8	2L4' T8 28w/ELEE HI/RFL	6	0.4	2,520	OCC SENSOR CEILING	1	290
IN	346	Packanack-Elemer	Classroom 101A	1	4L4' T12 EE/EEMAG	6	0.8	2L4' T8 28w/ELEE HI/RFL	6	0.4	2,520	OCC SENSOR CEILING	1	290
IN	347	Packanack-Elemer	Classroom 100	1	4L4' T12 EE/EEMAG	12	1.7	2L4' T8 28w/ELEE HI/RFL	12	0.8	2,520	OCC SENSOR CEILING	1	581
IN	348	Packanack-Elemer	Bath Girls	1	4L4' T12 EE/EEMAG	3	0.4	2L4' T8 28w/ELEE HI/RFL	3	0.2	3,320	OCC SENSOR CEIL DT 1GAN	1	191
IN	349	Packanack-Elemer	Bath Boys	1	4L4' T12 EE/EEMAG	2	0.3	2L4' T8 28w/ELEE HI/RFL	2	0.1	3,320	OCC SENSOR CEIL DT 1GAN	1	127
IN	350	Packanack-Elemer	Hall Baths To Office	1	2L4' T12 EE/EEMAG	3	0.2	1L4' T8 28w/ELEE HI/NEW	3	0.1	3,620	NO RETRO		
IN	351	Packanack-Elemer	Hall Baths To Office	1	4L4' T12 EE/EEMAG	6	0.8	2L4' T8 28w/ELEE HI/RFL	6	0.4	3,620	NO RETRO		
IN	352	Packanack-Elemer	Office Cst	1	4L4' T8 32w/EL	4	0.4	2L4' T8 28w/ELEE HI/RFL	4	0.3	2,320	OCC SENSOR CEILING	1	178
IN	353	Packanack-Elemer	Storage By Cst	1	2L4' T8 32w/EL	1	0.1	1L4' T8 28w/ELEE HI/NEW	1	0.0	500	NO RETRO		
IN	354	Packanack-Elemer	Office Custodian	1	3L4' T8 32w/EL	1	0.1	3L4' T8 28w/ELEE LO	1	0.1	2,320	OCC SENSOR WALLSWITCH	1	44
IN	355	Packanack-Elemer	Classroom 8	1	4L4' T8 32w/EL-8'	6	0.7	2L4' T8 28w/ELEE HI/NEW-8'	6	0.4	2,520	OCC SENSOR CEILING	1	290
IN	356	Packanack-Elemer	Office Phone	1	4L4' T8 32w/EL	1	0.1	2L4' T8 28w/ELEE HI/NEW	1	0.1	2,320	OCC SENSOR WALLSWITCH	1	45
IN	357	Packanack-Elemer	Bath Boys	1	4L4' T8 32w/EL	2	0.2	2L4' T8 28w/ELEE HI/RFL	2	0.1	3,320	OCC SENSOR WALLSWITCH	1	127
IN	358	Packanack-Elemer	Classroom 7	1	4L4' T8 32w/EL-8'	6	0.7	2L4' T8 28w/ELEE HI/NEW-8'	6	0.4	2,520	OCC SENSOR CEILING	1	290
IN	359	Packanack-Elemer	Classroom 6	1	4L4' T8 32w/EL-8'	6	0.7	2L4' T8 28w/ELEE HI/NEW-8'	6	0.4	2,520	OCC SENSOR CEILING	1	290
IN	360	Packanack-Elemer	Classroom 5	1	4L4' T8 32w/EL-8'	6	0.7	2L4' T8 28w/ELEE HI/NEW-8'	6	0.4	2,520	OCC SENSOR CEILING	1	290

In or Out	Line	Building Name	Location	Fl	Pre Fixture Description	Pre Qty	Pre kW	Post Fixture Description	Post Qty	Post kW	Annual Hours	*Control Description*	*Control Qty*	Control kWH Saved
IN	361	Packanack-Elemer	Classroom 4	1	4L4' T8 32w/EL-8'	6	0.7	2L4' T8 28w/ELEE HI/NEW-8'	6	0.4	2,520	OCC SENSOR CEILING	1	290
IN	362	Packanack-Elemer	Office Main	1	4L4' T8 32w/EL	1	0.1	2L4' T8 28w/ELEE HI/RFL	1	0.1	2,320	OCC SENSOR CEILING	1	45
IN	363	Packanack-Elemer	Office Main	1	4L4' T8 32w/EL-8'	1	0.1	2L4' T8 28w/ELEE HI/NEW-8'	1	0.1	2,320	OCC SENSOR CEILING	1	45
IN	364	Packanack-Elemer	Hall To Principal	1	2L4' T8 32w/EL	1	0.1	1L4' T8 28w/ELEE HI/NEW	1	0.0	3,620	OCC SENSOR CEILING	1	36
IN	365	Packanack-Elemer	Bath Main Office	1	3L4' T8 32w/EL	1	0.1	3L4' T8 28w/ELEE LO	1	0.1	3,320	OCC SENSOR WALLSWITCH	1	63
IN	366	Packanack-Elemer	Hall Lib To Stage	1	3L4' T8 32w/EL	12	1.1	3L4' T8 28w/ELEE LO	12	0.8	3,620	NO RETRO		
IN	367	Packanack-Elemer	Hall Lib To Stage	1	2L4' T12 EE/EEMAG	2	0.1	1L4' T8 28w/ELEE HI/NEW	2	0.1	3,620	NO RETRO		
IN	368	Packanack-Elemer	Hall Display Case	1	1L4' T12 EE/EEMAG	1	0.0	1L4' T8 28w/ELEE LO/STRIP KI	1	0.0	3,620	NO RETRO		
IN	369	Packanack-Elemer	Office Copy	1	2L4' T8 32w/EL	1	0.1	1L4' T8 28w/ELEE HI/NEW	1	0.0	2,320	NO RETRO		
IN	370	Packanack-Elemer	Office Principal	1	4L4' T12 EE/EEMAG	4	0.6	2L4' T8 28w/ELEE HI/RFL	4	0.3	2,320	OCC SENSOR CEILING	1	178
IN	371	Packanack-Elemer	Bath Girls	1	3L4' T8 32w/EL	2	0.2	3L4' T8 28w/ELEE LO	2	0.1	3,320	NO RETRO		
IN	372	Packanack-Elemer	Closet Clean	1	23W COMPACT SCREWIN	1	0.0	NO RETRO		0.0	500	NO RETRO		
IN	373	Packanack-Elemer	Storage Books	1	2L4' T8 32w/EL	1	0.1	1L4' T8 28w/ELEE HI/NEW	1	0.0	500	NO RETRO		
IN	374	Packanack-Elemer	Mechanical Boiler	1	2L4' T8 32w/EL	6	0.4	2L4' T8 28w/ELEE LO	6	0.3	500	NO RETRO		
IN	375	Packanack-Elemer	Gym Main	1	4L4' T5 HO/EL	12	2.8	NO RETRO		2.8	2,920	OCC SENSOR CEILING	4	2,460
IN	376	Packanack-Elemer	Stage	1	2L8' T12 HO STD/EL	2	0.4	4L4' T8 28w/ELEE HI/STRIP KIT	2	0.3	2,920	NO RETRO		
IN	377	Packanack-Elemer	Stage	1	100W INCANDESCENT	6	0.6	2L4' T8 28w/ELEE/NEW	6	0.3	2,920	NO RETRO		
IN	378	Packanack-Elemer	Hall By Stage	1	2L4' T12 EE/EEMAG	1	0.1	1L4' T8 28w/ELEE HI/NEW	1	0.0	3,620	OCC SENSOR CEILING	1	36
IN	379	Packanack-Elemer	Hall 1 To 3	1	3L4' T8 32w/EL	3	0.3	3L4' T8 28w/ELEE LO	3	0.2	3,620	NO RETRO		
IN	380	Packanack-Elemer	Hall 1 To 3	1	2L4' T8 32w/EL	1	0.1	1L4' T8 28w/ELEE HI/NEW	1	0.0	3,620	NO RETRO		
IN	381	Packanack-Elemer	Classroom 3	1	4L4' T8 32w/EL-8'	6	0.7	2L4' T8 28w/ELEE HI/NEW-8'	6	0.4	2,520	OCC SENSOR CEILING	1	290
IN	382	Packanack-Elemer	Classroom 2	1	4L4' T8 32w/EL-8'	6	0.7	2L4' T8 28w/ELEE HI/NEW-8'	6	0.4	2,520	OCC SENSOR CEILING	1	290
IN	383	Packanack-Elemer	Classroom 1	1	4L4' T8 32w/EL-8'	6	0.7	2L4' T8 28w/ELEE HI/NEW-8'	6	0.4	2,520	OCC SENSOR CEILING	1	290
IN	384	Packanack-Elemer	Bldg Mt Fixture 1	ext	50W HI PRESSURE SODI	7	0.5	26 WATT LED/NEW	7	0.2	4,380	NO RETRO		
IN	385	Packanack-Elemer	Bldg Mt Fixture 2	ext	28W COMPACT HARDWIF	2	0.1	NO RETRO		0.1	4,380	NO RETRO		
IN	386	Packanack-Elemer	Bldg Mt Fixture 3	ext	3 WATT LED	1	0.0	NO RETRO		0.0	4,380	NO RETRO		
IN	387	Packanack-Elemer	Bldg Mt Fixture 4	ext	72W COMPACT SCREWIN	1	0.1	25 WATT LED/NEW	1	0.0	4,380	NO RETRO		
IN	388	Packanack-Elemer	Bldg Mt Fixture 5	ext	250W HI PRESSURE SOD	7	2.1	133 WATT LED/NEW	7	0.9	4,380	NO RETRO		
IN	389	Packanack-Elemer	Bldg Mt Fixture 6	ext	50W HI PRESSURE SODI	1	0.1	26 WATT LED/NEW	1	0.0	4,380	NO RETRO		
IN	390	Packanack-Elemer	Bldg Mt Fixture 7	ext	150W METAL HALIDE	1	0.2	70 WATT LED/NEW	1	0.1	4,380	NO RETRO		
IN	391	Packanack-Elemer	Bldg Mt Fixture 8	ext	26W COMPACT HARDWIF	1	0.0	NO RETRO		0.0	4,380	NO RETRO		
IN	392	Theunis Dey-Eleme	Classroom 2D	1	4L4' T8 32w/EL	12	1.3	2L4' T8 28w/ELEE HI/RFL	12	0.8	2,520	OCC SENSOR CEILING	1	581
IN	393	Theunis Dey-Eleme	Classroom 2C	1	4L4' T8 32w/EL	12	1.3	2L4' T8 28w/ELEE HI/RFL	12	0.8	2,520	OCC SENSOR CEILING	1	581
IN	394	Theunis Dey-Eleme	Classroom 2A	1	4L4' T8 32w/EL	12	1.3	2L4' T8 28w/ELEE HI/RFL	12	0.8	2,520	OCC SENSOR CEILING	1	581
IN	395	Theunis Dey-Eleme	Classroom 2B	1	4L4' T8 32w/EL	12	1.3	2L4' T8 28w/ELEE HI/RFL	12	0.8	2,520	OCC SENSOR CEILING	1	581
IN	396	Theunis Dey-Eleme	Hall 2D To 2B	1	2L4' T8 32w/EL	5	0.3	2L4' T8 28w/ELEE LO	5	0.2	3,620	NO RETRO		
IN	397	Theunis Dey-Eleme	Bath Boys	1	4L4' T8 32w/EL	2	0.2	2L4' T8 28w/ELEE HI/RFL	2	0.1	3,320	OCC SENSOR CEIL DT 1GAN	1	127
IN	398	Theunis Dey-Eleme	Bath Boys	1	2L4' T8 32w/EL	1	0.1	2L4' T8 28w/ELEE LO	1	0.0	3,320	INCLUDED ABOVE		42
IN	399	Theunis Dey-Eleme	Bath Girls	1	4L4' T8 32w/EL	1	0.1	2L4' T8 28w/ELEE HI/RFL	1	0.1	3,320	OCC SENSOR CEIL DT 1GAN	1	64
IN	400	Theunis Dey-Eleme	Bath Girls	1	2L4' T8 32w/EL	1	0.1	2L4' T8 28w/ELEE LO	1	0.0	3,320	INCLUDED ABOVE		42

In or Out	Line	Building Name	Location	Fl	Pre Fixture Description	Pre Qty	Pre kW	Post Fixture Description	Post Qty	Post kW	Annual Hours	*Control Description*	*Control Qty*	Control kWH Saved
IN	401	Theunis Dey-Eleme	Bath Girls	1	2L4' T8 U/EL	1	0.1	2L2' T8 15w/ELEE HI/RFL	1	0.0	3,320	INCLUDED ABOVE		33
IN	402	Theunis Dey-Eleme	Hall 2B To Main Lobby	1	2L4' T8 U/EL	2	0.1	2L2' T8 15w/ELEE HI/RFL	2	0.1	3,620	NO RETRO		
IN	403	Theunis Dey-Eleme	Hall 2B To Main Lobby	1	2L4' T8 32w/EL	3	0.2	2L4' T8 28w/ELEE LO	3	0.1	3,620	NO RETRO		
IN	404	Theunis Dey-Eleme	Lobby Main	1	2L4' T8 U/EL	6	0.4	2L2' T8 15w/ELEE HI/RFL	6	0.2	3,620	NO RETRO		
IN	405	Theunis Dey-Eleme	Office Open Main	1	3L4' T8 32w/EL	6	0.5	2L4' T8 28w/ELEE HI/RFL	6	0.4	2,720	OCC SENSOR CEILING	1	313
IN	406	Theunis Dey-Eleme	Office Copy	1	4L4' T8 32w/EL	2	0.2	2L4' T8 28w/ELEE HI/RFL	2	0.1	2,320	OCC SENSOR WALLSWITCH	1	89
IN	407	Theunis Dey-Eleme	Office Principal	1	4L4' T8 32w/EL	4	0.4	2L4' T8 28w/ELEE HI/RFL	4	0.3	2,320	OCC SENSOR CEILING	1	178
IN	408	Theunis Dey-Eleme	Office Nurse	1	4L4' T8 32w/EL-8'	2	0.2	2L4' T8 28w/ELEE HI/NEW-8'	2	0.1	2,320	OCC SENSOR CORNER MT.	1	89
IN	409	Theunis Dey-Eleme	Office Nurse	1	2L4' T8 32w/EL	2	0.1	1L4' T8 28w/ELEE HI/NEW	2	0.1	2,320	INCLUDED ABOVE		46
IN	410	Theunis Dey-Eleme	Bath Nurse	1	13W COMPACT HARDWIF	1	0.0	NO RETRO		0.0	3,320	TIMER WALLSWITCH 1GANG	1	15
IN	411	Theunis Dey-Eleme	Office 22	1	2L4' T8 32w/EL	1	0.1	1L4' T8 28w/ELEE HI/NEW	1	0.0	2,320	OCC SENSOR CEILING	1	23
IN	412	Theunis Dey-Eleme	Office 22	1	2L4' T12 EE/EEMAG	2	0.1	1L4' T8 28w/ELEE HI/NEW	2	0.1	2,320	INCLUDED ABOVE		46
IN	413	Theunis Dey-Eleme	Lounge Staff	1	4L4' T12 EE/EEMAG-8'	4	0.6	2L4' T8 28w/ELEE HI/NEW-8'	4	0.3	2,520	OCC SENSOR CEILING	1	194
IN	414	Theunis Dey-Eleme	Lounge Staff	1	2L4' T12 EE/EEMAG	2	0.1	1L4' T8 28w/ELEE HI/NEW	2	0.1	2,520	INCLUDED ABOVE		50
IN	415	Theunis Dey-Eleme	Storage Staff Lounge	1	2x60W INCANDESCENTS	1	0.1	2L2' T8 15w/ELEE LO/NEW	1	0.0	500	NO RETRO		
IN	416	Theunis Dey-Eleme	Bath Women	1	2L4' T8 U/EL	3	0.2	2L2' T8 15w/ELEE HI/RFL	3	0.1	3,320	OCC SENSOR CEIL DT 1GAN	1	99
IN	417	Theunis Dey-Eleme	Bath Women	1	3x13W COMPACT HARDV	1	0.0	NO RETRO		0.0	3,320	INCLUDED ABOVE		45
IN	418	Theunis Dey-Eleme	Closet Clean	1	2L4' T8 32w/EL	1	0.1	2L4' T8 28w/ELEE LO	1	0.0	500	OCC SENSOR WALLSWITCH	1	6
IN	419	Theunis Dey-Eleme	Bath Boys	1	2L4' T8 U/EL	4	0.2	2L2' T8 15w/ELEE HI/RFL	4	0.1	3,320	OCC SENSOR CEIL DT 1GAN	1	131
IN	420	Theunis Dey-Eleme	Storage Gym	1	2L4' T12 EE/EEMAG	1	0.1	1L4' T8 28w/ELEE HI/NEW	1	0.0	2,120	NO RETRO		
IN	421	Theunis Dey-Eleme	Storage Gym	1	4L4' T8 32w/EL-8'	1	0.1	2L4' T8 28w/ELEE HI/NEW-8'	1	0.1	2,120	NO RETRO		
IN	422	Theunis Dey-Eleme	Storage Gym	1	1L4' T12 EE/EEMAG	1	0.0	1L4' T8 28w/ELEE LO	1	0.0	2,120	NO RETRO		
IN	423	Theunis Dey-Eleme	Storage Gym	1	2L4' T8 32w/EL	1	0.1	2L4' T8 28w/ELEE LO	1	0.0	2,120	NO RETRO		
IN	424	Theunis Dey-Eleme	Classroom 13	1	4L4' T12 EE/EEMAG-8'	4	0.6	2L4' T8 28w/ELEE HI/NEW-8'	4	0.3	2,520	OCC SENSOR CEILING	1	194
IN	425	Theunis Dey-Eleme	Classroom 13	1	2L4' T12 EE/EEMAG	2	0.1	1L4' T8 28w/ELEE HI/NEW	2	0.1	2,520	INCLUDED ABOVE		50
IN	426	Theunis Dey-Eleme	Classroom 13	1	4L4' T12 EE/EEMAG-8'	2	0.3	2L4' T8 28w/ELEE HI/NEW-8'	2	0.1	2,520	INCLUDED ABOVE		97
IN	427	Theunis Dey-Eleme	Classroom 13	1	2L4' T12 EE/EEMAG	1	0.1	1L4' T8 28w/ELEE HI/NEW	1	0.0	2,520	INCLUDED ABOVE		25
IN	428	Theunis Dey-Eleme	Bath 13	1	32W CIRCLELINE HARDW	1	0.0	2L2' T8 15w/ELEE LO/NEW	1	0.0	3,320	TIMER WALLSWITCH 1GANG	1	24
IN	429	Theunis Dey-Eleme	Classroom 14	1	4L4' T12 EE/EEMAG-8'	4	0.6	2L4' T8 28w/ELEE HI/NEW-8'	4	0.3	2,520	OCC SENSOR CEILING	1	194
IN	430	Theunis Dey-Eleme	Classroom 14	1	2L4' T12 EE/EEMAG	2	0.1	1L4' T8 28w/ELEE HI/NEW	2	0.1	2,520	INCLUDED ABOVE		50
IN	431	Theunis Dey-Eleme	Classroom 14	1	4L4' T12 EE/EEMAG-8'	2	0.3	2L4' T8 28w/ELEE HI/NEW-8'	2	0.1	2,520	INCLUDED ABOVE		97
IN	432	Theunis Dey-Eleme	Classroom 14	1	2L4' T12 EE/EEMAG	1	0.1	1L4' T8 28w/ELEE HI/NEW	1	0.0	2,520	INCLUDED ABOVE		25
IN	433	Theunis Dey-Eleme	Bath 14	1	32W CIRCLELINE HARDW	1	0.0	2L2' T8 15w/ELEE LO/NEW	1	0.0	3,320	TIMER WALLSWITCH 1GANG	1	24
IN	434	Theunis Dey-Eleme	Classroom 15	1	4L4' T12 EE/EEMAG-8'	6	0.8	2L4' T8 28w/ELEE HI/NEW-8'	6	0.4	2,520	OCC SENSOR CEILING	1	290
IN	435	Theunis Dey-Eleme	Classroom 15	1	2L4' T12 EE/EEMAG	3	0.2	1L4' T8 28w/ELEE HI/NEW	3	0.1	2,520	INCLUDED ABOVE		75
IN	436	Theunis Dey-Eleme	Classroom 15	1	4L4' T12 EE/EEMAG-8'	3	0.4	2L4' T8 28w/ELEE HI/NEW-8'	3	0.2	2,520	INCLUDED ABOVE		145
IN	437	Theunis Dey-Eleme	Classroom 15	1	2L4' T12 EE/EEMAG	3	0.2	1L4' T8 28w/ELEE HI/NEW	3	0.1	2,520	INCLUDED ABOVE		75
IN	438	Theunis Dey-Eleme	Bath 15	1	32W CIRCLELINE HARDW	1	0.0	2L2' T8 15w/ELEE LO/NEW	1	0.0	3,320	TIMER WALLSWITCH 1GANG	1	24
IN	439	Theunis Dey-Eleme	Gym 16 Multipurpose	1	4L4' T12 EE/EEMAG-8'	6	0.8	4L4' T8 28w/ELEE LO-8'	6	0.5	2,920	OCC SENSOR CEILING	1	436
IN	440	Theunis Dey-Eleme	Classroom 16	1	2L4' T12 EE/EEMAG	3	0.2	1L4' T8 28w/ELEE HI/NEW	3	0.1	2,520	INCLUDED ABOVE		75

In or Out	Line	Building Name	Location	Fl	Pre Fixture Description	Pre Qty	Pre kW	Post Fixture Description	Post Qty	Post kW	Annual Hours	*Control Description*	*Control Qty*	Control kWH Saved
IN	441	Theunis Dey-Eleme	Classroom 16	1	4L4' T12 EE/EEMAG-8'	3	0.4	2L4' T8 28w/ELEE HI/NEW-8'	3	0.2	2,520	INCLUDED ABOVE		145
IN	442	Theunis Dey-Eleme	Classroom 16	1	2L4' T12 EE/EEMAG	3	0.2	1L4' T8 28w/ELEE HI/NEW	3	0.1	2,520	INCLUDED ABOVE		75
IN	443	Theunis Dey-Eleme	Bath 16	1	32W CIRCLELINE HARDW	1	0.0	2L2' T8 15w/ELEE LO/NEW	1	0.0	3,320	TIMER WALLSWITCH 1GANG	1	24
IN	444	Theunis Dey-Eleme	Closet Electrical	1	100W INCANDESCENT	1	0.1	23W COMPACT SI/29712/CF23I	1	0.0	500	OCC SENSOR WALLSWITCH	1	3
IN	445	Theunis Dey-Eleme	Hall By 17	1	4L4' T12 EE/EEMAG-8'	2	0.3	2L4' T8 28w/ELEE HI/NEW-8'	2	0.1	3,620	TIMER WALLSWITCH 1GANG	1	139
IN	446	Theunis Dey-Eleme	Hall By 17	1	2x60W INCANDESCENTS	1	0.1	2L2' T8 15w/ELEE LO/NEW	1	0.0	3,620	INCLUDED ABOVE		26
IN	447	Theunis Dey-Eleme	Classroom 17	1	4L4' T12 EE/EEMAG-8'	6	0.8	2L4' T8 28w/ELEE HI/NEW-8'	6	0.4	2,520	OCC SENSOR CEILING	1	290
IN	448	Theunis Dey-Eleme	Classroom 17	1	2L4' T12 EE/EEMAG	3	0.2	1L4' T8 28w/ELEE HI/NEW	3	0.1	2,520	INCLUDED ABOVE		75
IN	449	Theunis Dey-Eleme	Classroom 17	1	4L4' T12 EE/EEMAG-8'	3	0.4	2L4' T8 28w/ELEE HI/NEW-8'	3	0.2	2,520	INCLUDED ABOVE		145
IN	450	Theunis Dey-Eleme	Classroom 17	1	2L4' T12 EE/EEMAG	3	0.2	1L4' T8 28w/ELEE HI/NEW	3	0.1	2,520	INCLUDED ABOVE		75
IN	451	Theunis Dey-Eleme	Bath 17	1	32W CIRCLELINE HARDW	1	0.0	2L2' T8 15w/ELEE LO/NEW	1	0.0	3,320	TIMER WALLSWITCH 1GANG	1	24
IN	452	Theunis Dey-Eleme	Classroom 18	1	4L4' T12 EE/EEMAG-8'	4	0.6	2L4' T8 28w/ELEE HI/NEW-8'	4	0.3	2,520	OCC SENSOR CEILING	1	194
IN	453	Theunis Dey-Eleme	Classroom 18	1	2L4' T12 EE/EEMAG	2	0.1	1L4' T8 28w/ELEE HI/NEW	2	0.1	2,520	INCLUDED ABOVE		50
IN	454	Theunis Dey-Eleme	Classroom 18	1	4L4' T12 EE/EEMAG-8'	2	0.3	2L4' T8 28w/ELEE HI/NEW-8'	2	0.1	2,520	INCLUDED ABOVE		97
IN	455	Theunis Dey-Eleme	Classroom 18	1	2L4' T12 EE/EEMAG	1	0.1	1L4' T8 28w/ELEE HI/NEW	1	0.0	2,520	INCLUDED ABOVE		25
IN	456	Theunis Dey-Eleme	Bath 18	1	32W CIRCLELINE HARDW	1	0.0	2L2' T8 15w/ELEE LO/NEW	1	0.0	3,320	TIMER WALLSWITCH 1GANG	1	24
IN	457	Theunis Dey-Eleme	Classroom 19	1	4L4' T12 EE/EEMAG-8'	4	0.6	2L4' T8 28w/ELEE HI/NEW-8'	4	0.3	2,520	OCC SENSOR CEILING	1	194
IN	458	Theunis Dey-Eleme	Classroom 19	1	2L4' T12 EE/EEMAG	2	0.1	1L4' T8 28w/ELEE HI/NEW	2	0.1	2,520	INCLUDED ABOVE		50
IN	459	Theunis Dey-Eleme	Classroom 19	1	4L4' T12 EE/EEMAG-8'	2	0.3	2L4' T8 28w/ELEE HI/NEW-8'	2	0.1	2,520	INCLUDED ABOVE		97
IN	460	Theunis Dey-Eleme	Classroom 19	1	2L4' T12 EE/EEMAG	1	0.1	1L4' T8 28w/ELEE HI/NEW	1	0.0	2,520	INCLUDED ABOVE		25
IN	461	Theunis Dey-Eleme	Bath 19	1	32W CIRCLELINE HARDW	1	0.0	2L2' T8 15w/ELEE LO/NEW	1	0.0	3,320	TIMER WALLSWITCH 1GANG	1	24
IN	462	Theunis Dey-Eleme	Classroom 20	1	4L4' T12 EE/EEMAG-8'	4	0.6	2L4' T8 28w/ELEE HI/NEW-8'	4	0.3	2,520	OCC SENSOR CEILING	1	194
IN	463	Theunis Dey-Eleme	Classroom 20	1	2L4' T12 EE/EEMAG	2	0.1	1L4' T8 28w/ELEE HI/NEW	2	0.1	2,520	INCLUDED ABOVE		50
IN	464	Theunis Dey-Eleme	Classroom 20	1	4L4' T12 EE/EEMAG-8'	2	0.3	2L4' T8 28w/ELEE HI/NEW-8'	2	0.1	2,520	INCLUDED ABOVE		97
IN	465	Theunis Dey-Eleme	Classroom 20	1	2L4' T12 EE/EEMAG	1	0.1	1L4' T8 28w/ELEE HI/NEW	1	0.0	2,520	INCLUDED ABOVE		25
IN	466	Theunis Dey-Eleme	Bath 20	1	32W CIRCLELINE HARDW	1	0.0	2L2' T8 15w/ELEE LO/NEW	1	0.0	3,320	TIMER WALLSWITCH 1GANG	1	24
IN	467	Theunis Dey-Eleme	Classroom 21	1	4L4' T12 EE/EEMAG-8'	4	0.6	2L4' T8 28w/ELEE HI/NEW-8'	4	0.3	2,520	OCC SENSOR CEILING	1	194
IN	468	Theunis Dey-Eleme	Classroom 21	1	2L4' T12 EE/EEMAG	2	0.1	1L4' T8 28w/ELEE HI/NEW	2	0.1	2,520	INCLUDED ABOVE		50
IN	469	Theunis Dey-Eleme	Classroom 21	1	4L4' T12 EE/EEMAG-8'	2	0.3	2L4' T8 28w/ELEE HI/NEW-8'	2	0.1	2,520	INCLUDED ABOVE		97
IN	470	Theunis Dey-Eleme	Classroom 21	1	2L4' T12 EE/EEMAG	1	0.1	1L4' T8 28w/ELEE HI/NEW	1	0.0	2,520	INCLUDED ABOVE		25
IN	471	Theunis Dey-Eleme	Bath 21	1	32W CIRCLELINE HARDW	1	0.0	2L2' T8 15w/ELEE LO/NEW	1	0.0	3,320	TIMER WALLSWITCH 1GANG	1	24
IN	472	Theunis Dey-Eleme	Gym Main	1	2L4' T8 32w/EL	48	2.9	2L4' T8 28w/ELEE LO	48	2.0	2,920	NO RETRO		
IN	473	Theunis Dey-Eleme	Office Custodial	1	3L4' T12 EE/EEMAG	3	0.3	3L4' T8 28w/ELEE LO	3	0.2	2,320	OCC SENSOR CEILING	1	132
IN	474	Theunis Dey-Eleme	Office Custodial	1	3L4' T8 32w/EL	1	0.1	3L4' T8 28w/ELEE LO	1	0.1	2,320	INCLUDED ABOVE		44
IN	475	Theunis Dey-Eleme	Mechanical Boiler	1	2L4' T8 32w/EL	7	0.4	2L4' T8 28w/ELEE LO	7	0.3	500	NO RETRO		
IN	476	Theunis Dey-Eleme	Hall Custodial Office To Main Lob	1	2L4' T8 U/EL	8	0.5	2L2' T8 15w/ELEE HI/RFL	8	0.3	3,620	NO RETRO		
IN	477	Theunis Dey-Eleme	Kitchen Prep Area	1	2L4' T8 U/EL	29	1.7	2L4' T8 28w/ELEE LO/NEW	29	1.2	1,920	NO RETRO		
IN	478	Theunis Dey-Eleme	Kitchen Prep Area	1	60W INCANDESCENT	1	0.1	23W COMPACT SI/29712/CF23I	1	0.0	1,920	NO RETRO		
IN	479	Theunis Dey-Eleme	Kitchen Prep Area	1	2x13W COMPACT HARDW	1	0.0	NO RETRO		0.0	1,920	NO RETRO		
IN	480	Theunis Dey-Eleme	Kitchen Grease Hood	1	100W INCANDESCENT	2	0.2	23W COMPACT SI/29712/CF23I	2	0.0	1,920	NO RETRO		

In or Out	Line	Building Name	Location	Fl	Pre Fixture Description	Pre Qty	Pre kW	Post Fixture Description	Post Qty	Post kW	Annual Hours	*Control Description*	*Control Qty*	Control kWH Saved
IN	481	Theunis Dey-Eleme	Storage Dry Goods	1	2L4' T8 U/EL	4	0.2	2L2' T8 15w/ELEE HI/RFL	4	0.1	2,120	OCC SENSOR CEILING	1	84
IN	482	Theunis Dey-Eleme	Office By Nurse	1	2L4' T12 EE/EEMAG	2	0.1	1L4' T8 28w/ELEE HI/NEW	2	0.1	2,320	OCC SENSOR WALLSWITCH	1	46
IN	483	Theunis Dey-Eleme	Cafeteria Multipurpose	1	150W METAL HALIDE	17	3.2	NO RETRO		3.2	2,720	NO RETRO		
IN	484	Theunis Dey-Eleme	Storage Tables	1	60W INCANDESCENT	2	0.1	23W COMPACT SI/29712/CF23I	2	0.0	500	NO RETRO		
IN	485	Theunis Dey-Eleme	Classroom 12	1	4L4' T12 EE/EEMAG-8'	4	0.6	2L4' T8 28w/ELEE HI/NEW-8'	4	0.3	2,520	OCC SENSOR CEILING	1	194
IN	486	Theunis Dey-Eleme	Classroom 12	1	2L4' T12 EE/EEMAG	2	0.1	1L4' T8 28w/ELEE HI/NEW	2	0.1	2,520	INCLUDED ABOVE		50
IN	487	Theunis Dey-Eleme	Classroom 12	1	4L4' T12 EE/EEMAG-8'	2	0.3	2L4' T8 28w/ELEE HI/NEW-8'	2	0.1	2,520	INCLUDED ABOVE		97
IN	488	Theunis Dey-Eleme	Classroom 12	1	2L4' T12 EE/EEMAG	1	0.1	1L4' T8 28w/ELEE HI/NEW	1	0.0	2,520	INCLUDED ABOVE		25
IN	489	Theunis Dey-Eleme	Bath 12	1	32W CIRCLELINE HARDW	1	0.0	2L2' T8 15w/ELEE LO/NEW	1	0.0	3,320	TIMER WALLSWITCH 1GANG	1	24
IN	490	Theunis Dey-Eleme	Classroom 11	1	4L4' T12 EE/EEMAG-8'	4	0.6	2L4' T8 28w/ELEE HI/NEW-8'	4	0.3	2,520	OCC SENSOR CEILING	1	194
IN	491	Theunis Dey-Eleme	Classroom 11	1	2L4' T12 EE/EEMAG	2	0.1	1L4' T8 28w/ELEE HI/NEW	2	0.1	2,520	INCLUDED ABOVE		50
IN	492	Theunis Dey-Eleme	Classroom 11	1	4L4' T12 EE/EEMAG-8'	2	0.3	2L4' T8 28w/ELEE HI/NEW-8'	2	0.1	2,520	INCLUDED ABOVE		97
IN	493	Theunis Dey-Eleme	Classroom 11	1	2L4' T12 EE/EEMAG	1	0.1	1L4' T8 28w/ELEE HI/NEW	1	0.0	2,520	INCLUDED ABOVE		25
IN	494	Theunis Dey-Eleme	Bath 11	1	32W CIRCLELINE HARDW	1	0.0	2L2' T8 15w/ELEE LO/NEW	1	0.0	3,320	TIMER WALLSWITCH 1GANG	1	24
IN	495	Theunis Dey-Eleme	Classroom 10	1	4L4' T12 EE/EEMAG-8'	4	0.6	2L4' T8 28w/ELEE HI/NEW-8'	4	0.3	2,520	OCC SENSOR CEILING	1	194
IN	496	Theunis Dey-Eleme	Classroom 10	1	2L4' T12 EE/EEMAG	2	0.1	1L4' T8 28w/ELEE HI/NEW	2	0.1	2,520	INCLUDED ABOVE		50
IN	497	Theunis Dey-Eleme	Classroom 10	1	4L4' T12 EE/EEMAG-8'	2	0.3	2L4' T8 28w/ELEE HI/NEW-8'	2	0.1	2,520	INCLUDED ABOVE		97
IN	498	Theunis Dey-Eleme	Classroom 10	1	2L4' T12 EE/EEMAG	1	0.1	1L4' T8 28w/ELEE HI/NEW	1	0.0	2,520	INCLUDED ABOVE		25
IN	499	Theunis Dey-Eleme	Bath 10	1	32W CIRCLELINE HARDW	1	0.0	2L2' T8 15w/ELEE LO/NEW	1	0.0	3,320	TIMER WALLSWITCH 1GANG	1	24
IN	500	Theunis Dey-Eleme	Classroom 9	1	4L4' T12 EE/EEMAG-8'	4	0.6	2L4' T8 28w/ELEE HI/NEW-8'	4	0.3	2,520	OCC SENSOR CEILING	1	194
IN	501	Theunis Dey-Eleme	Classroom 9	1	2L4' T12 EE/EEMAG	2	0.1	1L4' T8 28w/ELEE HI/NEW	2	0.1	2,520	INCLUDED ABOVE		50
IN	502	Theunis Dey-Eleme	Classroom 9	1	4L4' T12 EE/EEMAG-8'	2	0.3	2L4' T8 28w/ELEE HI/NEW-8'	2	0.1	2,520	INCLUDED ABOVE		97
IN	503	Theunis Dey-Eleme	Classroom 9	1	2L4' T12 EE/EEMAG	1	0.1	1L4' T8 28w/ELEE HI/NEW	1	0.0	2,520	INCLUDED ABOVE		25
IN	504	Theunis Dey-Eleme	Classroom 8	1	4L4' T12 EE/EEMAG-8'	4	0.6	2L4' T8 28w/ELEE HI/NEW-8'	4	0.3	2,520	OCC SENSOR CEILING	1	194
IN	505	Theunis Dey-Eleme	Classroom 8	1	2L4' T12 EE/EEMAG	2	0.1	1L4' T8 28w/ELEE HI/NEW	2	0.1	2,520	INCLUDED ABOVE		50
IN	506	Theunis Dey-Eleme	Classroom 8	1	4L4' T12 EE/EEMAG-8'	2	0.3	2L4' T8 28w/ELEE HI/NEW-8'	2	0.1	2,520	INCLUDED ABOVE		97
IN	507	Theunis Dey-Eleme	Classroom 8	1	2L4' T12 EE/EEMAG	1	0.1	1L4' T8 28w/ELEE HI/NEW	1	0.0	2,520	INCLUDED ABOVE		25
IN	508	Theunis Dey-Eleme	Classroom 7	1	4L4' T12 EE/EEMAG-8'	4	0.6	2L4' T8 28w/ELEE HI/NEW-8'	4	0.3	2,520	OCC SENSOR CEILING	1	194
IN	509	Theunis Dey-Eleme	Classroom 7	1	2L4' T12 EE/EEMAG	2	0.1	1L4' T8 28w/ELEE HI/NEW	2	0.1	2,520	INCLUDED ABOVE		50
IN	510	Theunis Dey-Eleme	Classroom 7	1	4L4' T12 EE/EEMAG-8'	2	0.3	2L4' T8 28w/ELEE HI/NEW-8'	2	0.1	2,520	INCLUDED ABOVE		97
IN	511	Theunis Dey-Eleme	Classroom 7	1	2L4' T12 EE/EEMAG	1	0.1	1L4' T8 28w/ELEE HI/NEW	1	0.0	2,520	INCLUDED ABOVE		25
IN	512	Theunis Dey-Eleme	Classroom 7A	1	3L4' T12 EE/EEMAG	6	0.7	2L4' T8 28w/ELEE HI/RFL	6	0.4	2,520	OCC SENSOR CEILING	1	290
IN	513	Theunis Dey-Eleme	Classroom 7B	1	3L4' T12 EE/EEMAG	6	0.7	2L4' T8 28w/ELEE HI/RFL	6	0.4	2,520	OCC SENSOR CEILING	1	290
IN	514	Theunis Dey-Eleme	Library	1	2L4' T12 EE/EEMAG	30	2.1	2L4' T8 28w/ELEE LO	30	1.3	2,520	NO RETRO		
IN	515	Theunis Dey-Eleme	Library	1	2L4' T12 EE/EEMAG	10	0.7	1L4' T8 28w/ELEE HI/NEW	10	0.3	2,520	NO RETRO		
IN	516	Theunis Dey-Eleme	Library	1	4L4' T12 EE/EEMAG	4	0.6	2L4' T8 28w/ELEE HI/NEW	4	0.3	2,520	NO RETRO		
IN	517	Theunis Dey-Eleme	Office Library	1	3L4' T12 EE/EEMAG	4	0.4	3L4' T8 28w/ELEE LO	4	0.3	2,320	OCC SENSOR CEILING	1	175
IN	518	Theunis Dey-Eleme	Storage It	1	4L4' T12 EE/EEMAG	2	0.3	2L4' T8 28w/ELEE HI/NEW	2	0.1	2,120	OCC SENSOR CEILING	1	81
IN	519	Theunis Dey-Eleme	Bath Boys	1	3x13W COMPACT HARDV	1	0.0	NO RETRO		0.0	3,320	OCC SENSOR CEIL DT 1GAN	1	45
IN	520	Theunis Dey-Eleme	Bath Boys	1	2L4' T8 U/EL	2	0.1	2L2' T8 15w/ELEE HI/RFL	2	0.1	3,320	INCLUDED ABOVE		66

In or Out	Line	Building Name	Location	Fl	Pre Fixture Description	Pre Qty	Pre kW	Post Fixture Description	Post Qty	Post kW	Annual Hours	*Control Description*	*Control Qty*	Control kWH Saved
IN	521	Theunis Dey-Eleme	Bath Staff	1	3x13W COMPACT HARDV	2	0.1	NO RETRO		0.1	3,320	OCC SENSOR WALLSWITCH	1	90
IN	522	Theunis Dey-Eleme	Stage	1	2L8' T12 HO STD/EL	4	0.8	4L4' T8 28w/ELEE HI/STRIP KIT	4	0.5	2,320	TIMER WALLSWITCH 1GANG	1	351
IN	523	Theunis Dey-Eleme	Mechanical Air Handler	1	60W INCANDESCENT	1	0.1	23W COMPACT SI/29712/CF23I	1	0.0	500	OCC SENSOR WALLSWITCH	1	3
IN	524	Theunis Dey-Eleme	Bath Girls	1	3x13W COMPACT HARDV	1	0.0	NO RETRO		0.0	3,320	OCC SENSOR CEIL DT 1GAN	1	45
IN	525	Theunis Dey-Eleme	Bath Girls	1	2L4' T8 U/EL	2	0.1	2L2' T8 15w/ELEE HI/RFL	2	0.1	3,320	INCLUDED ABOVE		66
IN	526	Theunis Dey-Eleme	Hall 8 To 9	1	2L4' T8 U/EL	3	0.2	2L2' T8 15w/ELEE HI/RFL	3	0.1	3,620	NO RETRO		
IN	527	Theunis Dey-Eleme	Hall 8 To 9	1	2L4' T12 EE/EEMAG	1	0.1	1L4' T8 28w/ELEE HI/NEW	1	0.0	3,620	NO RETRO		
IN	528	Theunis Dey-Eleme	Classroom 6B	1	3L4' T12 EE/EEMAG	6	0.7	2L4' T8 28w/ELEE HI/RFL	6	0.4	2,520	OCC SENSOR CEILING	1	290
IN	529	Theunis Dey-Eleme	Classroom 6A	1	3L4' T12 EE/EEMAG	6	0.7	2L4' T8 28w/ELEE HI/RFL	6	0.4	2,520	OCC SENSOR CEILING	1	290
IN	530	Theunis Dey-Eleme	Classroom 6	1	4L4' T12 EE/EEMAG-8'	4	0.6	2L4' T8 28w/ELEE HI/NEW-8'	4	0.3	2,520	OCC SENSOR CEILING	1	194
IN	531	Theunis Dey-Eleme	Classroom 6	1	2L4' T12 EE/EEMAG	2	0.1	1L4' T8 28w/ELEE HI/NEW	2	0.1	2,520	INCLUDED ABOVE		50
IN	532	Theunis Dey-Eleme	Classroom 6	1	4L4' T12 EE/EEMAG-8'	2	0.3	2L4' T8 28w/ELEE HI/NEW-8'	2	0.1	2,520	INCLUDED ABOVE		97
IN	533	Theunis Dey-Eleme	Classroom 6	1	2L4' T12 EE/EEMAG	1	0.1	1L4' T8 28w/ELEE HI/NEW	1	0.0	2,520	INCLUDED ABOVE		25
IN	534	Theunis Dey-Eleme	Classroom 5	1	4L4' T12 EE/EEMAG-8'	4	0.6	2L4' T8 28w/ELEE HI/NEW-8'	4	0.3	2,520	OCC SENSOR CEILING	1	194
IN	535	Theunis Dey-Eleme	Classroom 5	1	2L4' T12 EE/EEMAG	2	0.1	1L4' T8 28w/ELEE HI/NEW	2	0.1	2,520	INCLUDED ABOVE		50
IN	536	Theunis Dey-Eleme	Classroom 5	1	4L4' T12 EE/EEMAG-8'	2	0.3	2L4' T8 28w/ELEE HI/NEW-8'	2	0.1	2,520	INCLUDED ABOVE		97
IN	537	Theunis Dey-Eleme	Classroom 5	1	2L4' T12 EE/EEMAG	1	0.1	1L4' T8 28w/ELEE HI/NEW	1	0.0	2,520	INCLUDED ABOVE		25
IN	538	Theunis Dey-Eleme	Classroom 4	1	4L4' T12 EE/EEMAG-8'	4	0.6	2L4' T8 28w/ELEE HI/NEW-8'	4	0.3	2,520	OCC SENSOR CEILING	1	194
IN	539	Theunis Dey-Eleme	Classroom 4	1	2L4' T12 EE/EEMAG	2	0.1	1L4' T8 28w/ELEE HI/NEW	2	0.1	2,520	INCLUDED ABOVE		50
IN	540	Theunis Dey-Eleme	Classroom 4	1	4L4' T12 EE/EEMAG-8'	2	0.3	2L4' T8 28w/ELEE HI/NEW-8'	2	0.1	2,520	INCLUDED ABOVE		97
IN	541	Theunis Dey-Eleme	Classroom 4	1	2L4' T12 EE/EEMAG	1	0.1	1L4' T8 28w/ELEE HI/NEW	1	0.0	2,520	INCLUDED ABOVE		25
IN	542	Theunis Dey-Eleme	Classroom 3	1	4L4' T12 EE/EEMAG-8'	4	0.6	2L4' T8 28w/ELEE HI/NEW-8'	4	0.3	2,520	OCC SENSOR CEILING	1	194
IN	543	Theunis Dey-Eleme	Classroom 3	1	2L4' T12 EE/EEMAG	2	0.1	1L4' T8 28w/ELEE HI/NEW	2	0.1	2,520	INCLUDED ABOVE		50
IN	544	Theunis Dey-Eleme	Classroom 3	1	4L4' T12 EE/EEMAG-8'	2	0.3	2L4' T8 28w/ELEE HI/NEW-8'	2	0.1	2,520	INCLUDED ABOVE		97
IN	545	Theunis Dey-Eleme	Classroom 3	1	2L4' T12 EE/EEMAG	1	0.1	1L4' T8 28w/ELEE HI/NEW	1	0.0	2,520	INCLUDED ABOVE		25
IN	546	Theunis Dey-Eleme	Bath 3	1	32W CIRCLELINE HARDW	1	0.0	2L2' T8 15w/ELEE LO/NEW	1	0.0	3,320	TIMER WALLSWITCH 1GANG	1	24
IN	547	Theunis Dey-Eleme	Classroom 2	1	4L4' T12 EE/EEMAG-8'	4	0.6	2L4' T8 28w/ELEE HI/NEW-8'	4	0.3	2,520	OCC SENSOR CEILING	1	194
IN	548	Theunis Dey-Eleme	Classroom 2	1	2L4' T12 EE/EEMAG	2	0.1	1L4' T8 28w/ELEE HI/NEW	2	0.1	2,520	INCLUDED ABOVE		50
IN	549	Theunis Dey-Eleme	Classroom 2	1	4L4' T12 EE/EEMAG-8'	2	0.3	2L4' T8 28w/ELEE HI/NEW-8'	2	0.1	2,520	INCLUDED ABOVE		97
IN	550	Theunis Dey-Eleme	Classroom 2	1	2L4' T12 EE/EEMAG	1	0.1	1L4' T8 28w/ELEE HI/NEW	1	0.0	2,520	INCLUDED ABOVE		25
IN	551	Theunis Dey-Eleme	Bath 2	1	32W CIRCLELINE HARDW	1	0.0	2L2' T8 15w/ELEE LO/NEW	1	0.0	3,320	TIMER WALLSWITCH 1GANG	1	24
IN	552	Theunis Dey-Eleme	Classroom 1	1	4L4' T12 EE/EEMAG-8'	4	0.6	2L4' T8 28w/ELEE HI/NEW-8'	4	0.3	2,520	OCC SENSOR CEILING	1	194
IN	553	Theunis Dey-Eleme	Classroom 1	1	2L4' T12 EE/EEMAG	2	0.1	1L4' T8 28w/ELEE HI/NEW	2	0.1	2,520	INCLUDED ABOVE		50
IN	554	Theunis Dey-Eleme	Classroom 1	1	4L4' T12 EE/EEMAG-8'	2	0.3	2L4' T8 28w/ELEE HI/NEW-8'	2	0.1	2,520	INCLUDED ABOVE		97
IN	555	Theunis Dey-Eleme	Classroom 1	1	2L4' T12 EE/EEMAG	1	0.1	1L4' T8 28w/ELEE HI/NEW	1	0.0	2,520	INCLUDED ABOVE		25
IN	556	Theunis Dey-Eleme	Bath 1	1	32W CIRCLELINE HARDW	1	0.0	2L2' T8 15w/ELEE LO/NEW	1	0.0	3,320	TIMER WALLSWITCH 1GANG	1	24
IN	557	Theunis Dey-Eleme	Hall 5 To 4	1	2L4' T12 EE/EEMAG	2	0.1	1L4' T8 28w/ELEE HI/NEW	2	0.1	3,620	NO RETRO		
IN	558	Theunis Dey-Eleme	Hall 5 To 4	1	2L4' T8 U/EL	3	0.2	2L2' T8 15w/ELEE HI/RFL	3	0.1	3,620	NO RETRO		
IN	559	Theunis Dey-Eleme	Hall By Class 3	1	2L4' T12 U EE/EEMAG	3	0.2	2L2' T8 15w/ELEE HI/RFL	3	0.1	3,620	NO RETRO		
IN	560	Theunis Dey-Eleme	Bldg Mt Fixture 1	ext	50W HI PRESSURE SODI	10	0.7	26 WATT LED/NEW	10	0.3	4,380	NO RETRO		

In or Out	Line	Building Name	Location	Fl	Pre Fixture Description	Pre Qty	Pre kW	Post Fixture Description	Post Qty	Post kW	Annual Hours	*Control Description*	*Control Qty*	Control kWH Saved
IN	561	Theunis Dey-Eleme	Bldg Mt Fixture 2	ext	3 WATT LED	1	0.0	NO RETRO		0.0	4,380	NO RETRO		
IN	562	Theunis Dey-Eleme	Bldg Mt Fixture 3	ext	3x13W COMPACT HARDV	5	0.2	NO RETRO		0.2	4,380	NO RETRO		
IN	563	Theunis Dey-Eleme	Bldg Mt Fixture 4	ext	250W HI PRESSURE SOD	8	2.4	133 WATT LED/NEW	8	1.1	4,380	NO RETRO		
IN	564	Theunis Dey-Eleme	Bldg Mt Fixture 5	ext	50W HI PRESSURE SODI	1	0.1	26 WATT LED/NEW	1	0.0	4,380	NO RETRO		
IN	565	Randall Carter-Eler	Classroom 11	1	4L4' T12 EE/EEMAG-8'	6	0.8	2L4' T8 28w/ELEE HI/NEW-8'	6	0.4	2,520	INCLUDED ABOVE		290
IN	566	Randall Carter-Eler	Classroom 11	1	4L4' T12 EE/EEMAG-8'	3	0.4	2L4' T8 28w/ELEE HI/NEW-8'	3	0.2	2,520	OCC SENSOR CEILING	1	145
IN	567	Randall Carter-Eler	Classroom 11	1	52W INCANDESCENT	1	0.1	11W COMPACT SI/29708/CF11	1	0.0	2,520	NO RETRO		
IN	568	Randall Carter-Eler	Classroom 10	1	4L4' T12 EE/EEMAG-8'	6	0.8	2L4' T8 28w/ELEE HI/NEW-8'	6	0.4	2,520	INCLUDED ABOVE		290
IN	569	Randall Carter-Eler	Classroom 10	1	4L4' T12 EE/EEMAG-8'	3	0.4	2L4' T8 28w/ELEE HI/NEW-8'	3	0.2	2,520	OCC SENSOR CEILING	1	145
IN	570	Randall Carter-Eler	Classroom 10	1	52W INCANDESCENT	1	0.1	11W COMPACT SI/29708/CF11	1	0.0	2,520	NO RETRO		
IN	571	Randall Carter-Eler	Classroom 12	1	4L4' T12 EE/EEMAG-8'	6	0.8	2L4' T8 28w/ELEE HI/NEW-8'	6	0.4	2,520	INCLUDED ABOVE		290
IN	572	Randall Carter-Eler	Classroom 12	1	4L4' T12 EE/EEMAG-8'	3	0.4	2L4' T8 28w/ELEE HI/NEW-8'	3	0.2	2,520	OCC SENSOR CEILING	1	145
IN	573	Randall Carter-Eler	Classroom 12	1	52W INCANDESCENT	1	0.1	11W COMPACT SI/29708/CF11	1	0.0	2,520	NO RETRO		
IN	574	Randall Carter-Eler	Classroom 9	1	4L4' T12 EE/EEMAG-8'	6	0.8	2L4' T8 28w/ELEE HI/NEW-8'	6	0.4	2,520	INCLUDED ABOVE		290
IN	575	Randall Carter-Eler	Classroom 9	1	4L4' T12 EE/EEMAG-8'	3	0.4	2L4' T8 28w/ELEE HI/NEW-8'	3	0.2	2,520	OCC SENSOR CEILING	1	145
IN	576	Randall Carter-Eler	Classroom 9	1	52W INCANDESCENT	1	0.1	11W COMPACT SI/29708/CF11	1	0.0	2,520	NO RETRO		
IN	577	Randall Carter-Eler	Classroom 13	1	4L4' T12 EE/EEMAG-8'	6	0.8	2L4' T8 28w/ELEE HI/NEW-8'	6	0.4	2,520	INCLUDED ABOVE		290
IN	578	Randall Carter-Eler	Classroom 13	1	4L4' T12 EE/EEMAG-8'	3	0.4	2L4' T8 28w/ELEE HI/NEW-8'	3	0.2	2,520	OCC SENSOR CEILING	1	145
IN	579	Randall Carter-Eler	Classroom 13	1	52W INCANDESCENT	1	0.1	11W COMPACT SI/29708/CF11	1	0.0	2,520	NO RETRO		
IN	580	Randall Carter-Eler	Classroom 8	1	4L4' T12 EE/EEMAG-8'	6	0.8	2L4' T8 28w/ELEE HI/NEW-8'	6	0.4	2,520	INCLUDED ABOVE		290
IN	581	Randall Carter-Eler	Classroom 8	1	4L4' T12 EE/EEMAG-8'	3	0.4	2L4' T8 28w/ELEE HI/NEW-8'	3	0.2	2,520	OCC SENSOR CEILING	1	145
IN	582	Randall Carter-Eler	Classroom 8	1	52W INCANDESCENT	1	0.1	11W COMPACT SI/29708/CF11	1	0.0	2,520	NO RETRO		
IN	583	Randall Carter-Eler	Classroom 14	1	4L4' T12 EE/EEMAG-8'	6	0.8	2L4' T8 28w/ELEE HI/NEW-8'	6	0.4	2,520	INCLUDED ABOVE		290
IN	584	Randall Carter-Eler	Classroom 14	1	4L4' T12 EE/EEMAG-8'	3	0.4	2L4' T8 28w/ELEE HI/NEW-8'	3	0.2	2,520	OCC SENSOR CEILING	1	145
IN	585	Randall Carter-Eler	Classroom 14	1	52W INCANDESCENT	1	0.1	11W COMPACT SI/29708/CF11	1	0.0	2,520	NO RETRO		
IN	586	Randall Carter-Eler	Classroom 7	1	4L4' T12 EE/EEMAG-8'	6	0.8	2L4' T8 28w/ELEE HI/NEW-8'	6	0.4	2,520	INCLUDED ABOVE		290
IN	587	Randall Carter-Eler	Classroom 7	1	4L4' T12 EE/EEMAG-8'	3	0.4	2L4' T8 28w/ELEE HI/NEW-8'	3	0.2	2,520	OCC SENSOR CEILING	1	145
IN	588	Randall Carter-Eler	Classroom 7	1	52W INCANDESCENT	1	0.1	11W COMPACT SI/29708/CF11	1	0.0	2,520	NO RETRO		
IN	589	Randall Carter-Eler	Classroom 15	1	4L4' T12 EE/EEMAG-8'	6	0.8	2L4' T8 28w/ELEE HI/NEW-8'	6	0.4	2,520	INCLUDED ABOVE		290
IN	590	Randall Carter-Eler	Classroom 15	1	4L4' T12 EE/EEMAG-8'	3	0.4	2L4' T8 28w/ELEE HI/NEW-8'	3	0.2	2,520	OCC SENSOR CEILING	1	145
IN	591	Randall Carter-Eler	Classroom 15	1	52W INCANDESCENT	1	0.1	11W COMPACT SI/29708/CF11	1	0.0	2,520	NO RETRO		
IN	592	Randall Carter-Eler	Classroom 6	1	4L4' T12 EE/EEMAG-8'	6	0.8	2L4' T8 28w/ELEE HI/NEW-8'	6	0.4	2,520	INCLUDED ABOVE		290
IN	593	Randall Carter-Eler	Classroom 6	1	4L4' T12 EE/EEMAG-8'	3	0.4	2L4' T8 28w/ELEE HI/NEW-8'	3	0.2	2,520	OCC SENSOR CEILING	1	145
IN	594	Randall Carter-Eler	Classroom 6	1	52W INCANDESCENT	1	0.1	11W COMPACT SI/29708/CF11	1	0.0	2,520	NO RETRO		
IN	595	Randall Carter-Eler	Hall 6 To 11	1	3L4' T8 32w/EL	16	1.4	3L4' T8 28w/ELEE LO	16	1.0	3,620	NO RETRO		
IN	596	Randall Carter-Eler	Office Nurse	1	4L4' T12 EE/EEMAG-8'	2	0.3	2L4' T8 28w/ELEE HI/NEW-8'	2	0.1	2,320	OCC SENSOR CEILING	1	89
IN	597	Randall Carter-Eler	Bath Nurse	1	23W COMPACT HARDWI	1	0.0	NO RETRO		0.0	3,320	OCC SENSOR WALLSWITCH	1	24
IN	598	Randall Carter-Eler	Storage 15	1	2L4' T12 EE/EEMAG	3	0.2	1L4' T8 28w/ELEE HI/NEW	3	0.1	2,120	TIMER WALLSWITCH 1GANG	1	63
IN	599	Randall Carter-Eler	Storage 17	1	2L4' T12 EE/EEMAG	4	0.3	1L4' T8 28w/ELEE HI/NEW	4	0.1	2,120	TIMER WALLSWITCH 1GANG	1	84
IN	600	Randall Carter-Eler	Office Main	1	4L4' T8 32w/EL-8'	2	0.2	2L4' T8 28w/ELEE HI/NEW-8'	2	0.1	2,320	OCC SENSOR CEILING	1	89

In or Out	Line	Building Name	Location	Fl	Pre Fixture Description	Pre Qty	Pre kW	Post Fixture Description	Post Qty	Post kW	Annual Hours	*Control Description*	*Control Qty*	Control kWH Saved
IN	601	Randall Carter-Eler	Office Main	1	2L4' T8 32w/EL	2	0.1	1L4' T8 28w/ELEE HI/NEW	2	0.1	2,320	INCLUDED ABOVE		46
IN	602	Randall Carter-Eler	Office Main	1	2L4' T8 U/EL	1	0.1	2L2' T8 15w/ELEE HI/RFL	1	0.0	2,320	TIMER WALLSWITCH 1GANG	1	23
IN	603	Randall Carter-Eler	Office Principal	1	4L4' T8 32w/EL-8'	2	0.2	2L4' T8 28w/ELEE HI/NEW-8'	2	0.1	2,320	OCC SENSOR CEILING	1	89
IN	604	Randall Carter-Eler	Stage Main	1	2L8' T12 HO STD/EL	4	0.8	4L4' T8 28w/ELEE HI/STRIP KIT	4	0.5	2,320	NO RETRO		
IN	605	Randall Carter-Eler	Stage Main	1	52W INCANDESCENT	3	0.2	2L4' T8 28w/ELEE/NEW	3	0.1	2,320	NO RETRO		
IN	606	Randall Carter-Eler	Stage Main	1	52W INCANDESCENT	1	0.1	23W COMPACT SI/29712/CF23I	1	0.0	2,320	TIMER WALLSWITCH 1GANG	1	16
IN	607	Randall Carter-Eler	Gym Main	1	150W METAL HALIDE	10	1.9	46 WATT LED/NEW	10	0.5	2,920	OCC. SENSOR ON HI BAY FI	10	403
IN	608	Randall Carter-Eler	Kitchen Prep Area	1	4L4' T12 EE/EEMAG-8'	3	0.4	4L4' T8 28w/ELEE LO/NEW-8'	3	0.2	1,920	TIMER WALLSWITCH 1GANG	1	143
IN	609	Randall Carter-Eler	Kitchen Grease Hood	1	52W INCANDESCENT	2	0.1	23W COMPACT SI/29712/CF23I	2	0.0	1,920	NO RETRO		
IN	610	Randall Carter-Eler	Hall Kitchen	1	2L4' T12 EE/EEMAG	1	0.1	1L4' T8 28w/ELEE HI/NEW	1	0.0	3,620	NO RETRO		
IN	611	Randall Carter-Eler	Storage Dry Goods	1	2L4' T12 EE/EEMAG	1	0.1	1L4' T8 28w/ELEE HI/NEW	1	0.0	2,120	NO RETRO		
IN	612	Randall Carter-Eler	Lounge Staff	1	4L4' T12 EE/EEMAG-8'	3	0.4	2L4' T8 28w/ELEE HI/NEW-8'	3	0.2	2,520	OCC SENSOR CEILING	1	145
IN	613	Randall Carter-Eler	Bath Staff	1	2L4' T8 32w/EL	1	0.1	2L4' T8 28w/ELEE LO/NEW	1	0.0	3,320	OCC SENSOR WALLSWITCH	1	42
IN	614	Randall Carter-Eler	Bath Staff	1	13W COMPACT HARDWIF	1	0.0	NO RETRO		0.0	3,320	INCLUDED ABOVE		15
IN	615	Randall Carter-Eler	Bath Staff	1	2L4' T8 32w/EL	1	0.1	1L4' T8 28w/ELEE HI/NEW	1	0.0	3,320	OCC SENSOR WALLSWITCH	1	33
IN	616	Randall Carter-Eler	Bath Staff	1	23W COMPACT HARDWIF	2	0.0	NO RETRO		0.0	3,320	INCLUDED ABOVE		48
IN	617	Randall Carter-Eler	Hall Custodian	1	2L2' T8 17w/EL	1	0.0	2L2' T8 15w/ELEE LO	1	0.0	3,620	OCC SENSOR WALLSWITCH	1	29
IN	618	Randall Carter-Eler	Office Custodian	1	2L4' T12 EE/EEMAG	1	0.1	1L4' T8 28w/ELEE HI/NEW	1	0.0	2,320	OCC SENSOR WALLSWITCH	1	23
IN	619	Randall Carter-Eler	Classroom Child Study	1	4L4' T12 EE/EEMAG	4	0.6	2L4' T8 28w/ELEE HI/NEW	4	0.3	2,520	OCC SENSOR CEILING	1	194
IN	620	Randall Carter-Eler	Mechanical Boiler	1	1L4' T8 32w/EL	1	0.0	1L4' T8 28w/ELEE LO	1	0.0	500	NO RETRO		
IN	621	Randall Carter-Eler	Mechanical Boiler	1	2L8' T12 HO STD/EL	3	0.6	4L4' T8 28w/ELEE HI/STRIP RFL	3	0.4	500	NO RETRO		
IN	622	Randall Carter-Eler	Mechanical Boiler	1	23W COMPACT HARDWIF	1	0.0	NO RETRO		0.0	500	NO RETRO		
IN	623	Randall Carter-Eler	Hall Boiler To 3	1	3L4' T8 32w/EL	11	1.0	3L4' T8 28w/ELEE LO	11	0.7	3,620	NO RETRO		
IN	624	Randall Carter-Eler	Hall Main Office To Main Exit	1	3L4' T8 32w/EL	13	1.1	3L4' T8 28w/ELEE LO	13	0.8	3,620	NO RETRO		
IN	625	Randall Carter-Eler	Hall Display Case	1	1L4' T12 EE/EEMAG	1	0.0	1L4' T8 28w/ELEE LO/STRIP KI	1	0.0	8,760	NO RETRO		
IN	626	Randall Carter-Eler	Bath Girls	1	2L4' T8 32w/EL	1	0.1	1L4' T8 28w/ELEE HI/NEW	1	0.0	3,320	OCC SENSOR WALLSWITCH	1	33
IN	627	Randall Carter-Eler	Bath Girls	1	4L4' T8 32w/EL-8'	2	0.2	2L4' T8 28w/ELEE HI/NEW-8'	2	0.1	3,320	INCLUDED ABOVE		127
IN	628	Randall Carter-Eler	Closet Clean	1	23W COMPACT HARDWIF	1	0.0	NO RETRO		0.0	500	OCC SENSOR WALLSWITCH	1	4
IN	629	Randall Carter-Eler	Bath Boys	1	2L4' T8 32w/EL	1	0.1	1L4' T8 28w/ELEE HI/NEW	1	0.0	3,320	OCC SENSOR WALLSWITCH	1	33
IN	630	Randall Carter-Eler	Bath Boys	1	4L4' T8 32w/EL-8'	2	0.2	2L4' T8 28w/ELEE HI/NEW-8'	2	0.1	3,320	INCLUDED ABOVE		127
IN	631	Randall Carter-Eler	Classroom 5	1	3L4' T8 32w/EL	9	0.8	2L4' T8 28w/ELEE HI/RFL	9	0.6	2,520	OCC SENSOR CEILING	1	435
IN	632	Randall Carter-Eler	Classroom 5	1	52W INCANDESCENT	1	0.1	11W COMPACT SI/29708/CF11I	1	0.0	2,520	NO RETRO		
IN	633	Randall Carter-Eler	Classroom 1	1	4L4' T12 EE/EEMAG	29	4.1	2L4' T8 28w/ELEE HI/RFL	29	1.9	2,520	OCC SENSOR CEILING	4	1,403
IN	634	Randall Carter-Eler	Classroom 1	1	4L4' T8 32w/EL	7	0.8	2L4' T8 28w/ELEE HI/RFL	7	0.4	2,520	INCLUDED ABOVE		339
IN	635	Randall Carter-Eler	Classroom 1	1	2L4' T12 U EE/EEMAG	2	0.1	2L2' T8 15w/ELEE HI/RFL	2	0.1	2,520	INCLUDED ABOVE		50
IN	636	Randall Carter-Eler	Office Librarian	1	2L4' T12 EE/EEMAG	1	0.1	1L4' T8 28w/ELEE HI/NEW	1	0.0	2,320	OCC SENSOR WALLSWITCH	1	23
IN	637	Randall Carter-Eler	Storage Server	1	4L4' T12 EE/EEMAG-8'	1	0.1	2L4' T8 28w/ELEE HI/NEW-8'	1	0.1	500	NO RETRO		
IN	638	Randall Carter-Eler	Classroom 4	1	3L4' T8 32w/EL	9	0.8	2L4' T8 28w/ELEE HI/RFL	9	0.6	2,520	OCC SENSOR CEILING	1	435
IN	639	Randall Carter-Eler	Classroom 4	1	52W INCANDESCENT	1	0.1	11W COMPACT SI/29708/CF11I	1	0.0	2,520	NO RETRO		
IN	640	Randall Carter-Eler	Classroom 3	1	3L4' T8 32w/EL	9	0.8	2L4' T8 28w/ELEE HI/RFL	9	0.6	2,520	OCC SENSOR CEILING	1	435

In or Out	Line	Building Name	Location	Fl	Pre Fixture Description	Pre Qty	Pre kW	Post Fixture Description	Post Qty	Post kW	Annual Hours	*Control Description*	*Control Qty*	Control kWH Saved
IN	641	Randall Carter-Eler	Classroom 3	1	52W INCANDESCENT	1	0.1	11W COMPACT SI/29708/CF11I	1	0.0	2,520	NO RETRO		
IN	642	Randall Carter-Eler	Hall 21 To 25	1	3L4' T8 32w/EL	11	1.0	3L4' T8 28w/ELEE LO	11	0.7	3,620	NO RETRO		
IN	643	Randall Carter-Eler	Classroom 30	1	4L4' T8 32w/EL	2	0.2	2L4' T8 28w/ELEE HI/RFL	2	0.1	2,520	OCC SENSOR WALLSWITCH	1	97
IN	644	Randall Carter-Eler	Mechanical Air Handler	1	52W INCANDESCENT	2	0.1	23W COMPACT SI/29712/CF23I	2	0.0	500	TIMER WALLSWITCH 1GANG	1	7
IN	645	Randall Carter-Eler	Classroom 21	1	2L4' T12 EE/EEMAG	2	0.1	2L4' T8 28w/ELEE LO	2	0.1	2,520	OCC SENSOR CEILING	1	64
IN	646	Randall Carter-Eler	Classroom 21	1	4L4' T12 EE/EEMAG	13	1.8	2L4' T8 28w/ELEE HI/NEW	13	0.8	2,520	INCLUDED ABOVE		629
IN	647	Randall Carter-Eler	Bath 21	1	2x13W COMPACT HARDV	1	0.0	NO RETRO		0.0	3,320	TIMER WALLSWITCH 1GANG	1	30
IN	648	Randall Carter-Eler	Classroom 22	1	2L4' T12 EE/EEMAG	3	0.2	2L4' T8 28w/ELEE LO	3	0.1	2,520	OCC SENSOR CEILING	1	95
IN	649	Randall Carter-Eler	Classroom 22	1	4L4' T12 EE/EEMAG-8'	6	0.8	2L4' T8 28w/ELEE HI/NEW-8'	6	0.4	2,520	INCLUDED ABOVE		290
IN	650	Randall Carter-Eler	Classroom 22	1	2L4' T12 EE/EEMAG	1	0.1	1L4' T8 28w/ELEE HI/NEW	1	0.0	2,520	INCLUDED ABOVE		25
IN	651	Randall Carter-Eler	Bath 22	1	2x13W COMPACT HARDV	1	0.0	NO RETRO		0.0	3,320	TIMER WALLSWITCH 1GANG	1	30
IN	652	Randall Carter-Eler	Classroom 29	1	4L4' T12 EE/EEMAG-8'	2	0.3	2L4' T8 28w/ELEE HI/NEW-8'	2	0.1	2,520	INCLUDED ABOVE		97
IN	653	Randall Carter-Eler	Classroom 29	1	2L4' T12 EE/EEMAG	1	0.1	1L4' T8 28w/ELEE HI/NEW	1	0.0	2,520	INCLUDED ABOVE		25
IN	654	Randall Carter-Eler	Classroom 29	1	4L4' T12 EE/EEMAG-8'	4	0.6	2L4' T8 28w/ELEE HI/NEW-8'	4	0.3	2,520	OCC SENSOR CEILING	1	194
IN	655	Randall Carter-Eler	Classroom 29	1	2L4' T12 EE/EEMAG	2	0.1	1L4' T8 28w/ELEE HI/NEW	2	0.1	2,520	INCLUDED ABOVE		50
IN	656	Randall Carter-Eler	Bath 29	1	2x13W COMPACT HARDV	1	0.0	NO RETRO		0.0	3,320	TIMER WALLSWITCH 1GANG	1	30
IN	657	Randall Carter-Eler	Classroom 23	1	4L4' T12 EE/EEMAG-8'	2	0.3	2L4' T8 28w/ELEE HI/NEW-8'	2	0.1	2,520	INCLUDED ABOVE		97
IN	658	Randall Carter-Eler	Classroom 23	1	2L4' T12 EE/EEMAG	1	0.1	1L4' T8 28w/ELEE HI/NEW	1	0.0	2,520	INCLUDED ABOVE		25
IN	659	Randall Carter-Eler	Classroom 23	1	4L4' T12 EE/EEMAG-8'	4	0.6	2L4' T8 28w/ELEE HI/NEW-8'	4	0.3	2,520	OCC SENSOR CEILING	1	194
IN	660	Randall Carter-Eler	Classroom 23	1	2L4' T12 EE/EEMAG	2	0.1	1L4' T8 28w/ELEE HI/NEW	2	0.1	2,520	INCLUDED ABOVE		50
IN	661	Randall Carter-Eler	Classroom 23	1	2L4' T12 EE/EEMAG	4	0.3	2L4' T8 28w/ELEE LO	4	0.2	2,520	INCLUDED ABOVE		127
IN	662	Randall Carter-Eler	Bath 23	1	2x13W COMPACT HARDV	1	0.0	NO RETRO		0.0	3,320	TIMER WALLSWITCH 1GANG	1	30
IN	663	Randall Carter-Eler	Storage 23	1	2x60W INCANDESCENTS	2	0.2	2L2' T8 15w/ELEE LO/NEW	2	0.0	500	OCC SENSOR WALLSWITCH	2	7
IN	664	Randall Carter-Eler	Classroom 28	1	4L4' T12 EE/EEMAG-8'	2	0.3	2L4' T8 28w/ELEE HI/NEW-8'	2	0.1	2,520	INCLUDED ABOVE		97
IN	665	Randall Carter-Eler	Classroom 28	1	2L4' T12 EE/EEMAG	1	0.1	1L4' T8 28w/ELEE HI/NEW	1	0.0	2,520	INCLUDED ABOVE		25
IN	666	Randall Carter-Eler	Classroom 28	1	4L4' T12 EE/EEMAG-8'	4	0.6	2L4' T8 28w/ELEE HI/NEW-8'	4	0.3	2,520	OCC SENSOR CEILING	1	194
IN	667	Randall Carter-Eler	Classroom 28	1	2L4' T12 EE/EEMAG	2	0.1	1L4' T8 28w/ELEE HI/NEW	2	0.1	2,520	INCLUDED ABOVE		50
IN	668	Randall Carter-Eler	Bath 28	1	2x13W COMPACT HARDV	1	0.0	NO RETRO		0.0	3,320	TIMER WALLSWITCH 1GANG	1	30
IN	669	Randall Carter-Eler	Closet Clean	1	60W INCANDESCENT	1	0.1	13 WATT LED/NEW	1	0.0	500	OCC SENSOR WALLSWITCH	1	2
IN	670	Randall Carter-Eler	Classroom 27	1	4L4' T12 EE/EEMAG-8'	2	0.3	2L4' T8 28w/ELEE HI/NEW-8'	2	0.1	2,520	INCLUDED ABOVE		97
IN	671	Randall Carter-Eler	Classroom 27	1	2L4' T12 EE/EEMAG	1	0.1	1L4' T8 28w/ELEE HI/NEW	1	0.0	2,520	INCLUDED ABOVE		25
IN	672	Randall Carter-Eler	Classroom 27	1	4L4' T12 EE/EEMAG-8'	4	0.6	2L4' T8 28w/ELEE HI/NEW-8'	4	0.3	2,520	OCC SENSOR CEILING	1	194
IN	673	Randall Carter-Eler	Classroom 27	1	2L4' T12 EE/EEMAG	2	0.1	1L4' T8 28w/ELEE HI/NEW	2	0.1	2,520	INCLUDED ABOVE		50
IN	674	Randall Carter-Eler	Bath 27	1	2x13W COMPACT HARDV	1	0.0	NO RETRO		0.0	3,320	TIMER WALLSWITCH 1GANG	1	30
IN	675	Randall Carter-Eler	Classroom 24	1	4L4' T12 EE/EEMAG-8'	2	0.3	2L4' T8 28w/ELEE HI/NEW-8'	2	0.1	2,520	INCLUDED ABOVE		97
IN	676	Randall Carter-Eler	Classroom 24	1	2L4' T12 EE/EEMAG	1	0.1	1L4' T8 28w/ELEE HI/NEW	1	0.0	2,520	INCLUDED ABOVE		25
IN	677	Randall Carter-Eler	Classroom 24	1	4L4' T12 EE/EEMAG-8'	4	0.6	2L4' T8 28w/ELEE HI/NEW-8'	4	0.3	2,520	OCC SENSOR CEILING	1	194
IN	678	Randall Carter-Eler	Classroom 24	1	2L4' T12 EE/EEMAG	2	0.1	1L4' T8 28w/ELEE HI/NEW	2	0.1	2,520	INCLUDED ABOVE		50
IN	679	Randall Carter-Eler	Classroom 24	1	2L4' T12 EE/EEMAG	4	0.3	2L4' T8 28w/ELEE LO	4	0.2	2,520	INCLUDED ABOVE		127
IN	680	Randall Carter-Eler	Bath 24	1	2x13W COMPACT HARDV	1	0.0	NO RETRO		0.0	3,320	TIMER WALLSWITCH 1GANG	1	30

In or Out	Line	Building Name	Location	Fl	Pre Fixture Description	Pre Qty	Pre kW	Post Fixture Description	Post Qty	Post kW	Annual Hours	*Control Description*	*Control Qty*	Control kWH Saved
IN	681	Randall Carter-Eler	Classroom 26	1	4L4' T12 EE/EEMAG-8'	2	0.3	2L4' T8 28w/ELEE HI/NEW-8'	2	0.1	2,520	INCLUDED ABOVE		97
IN	682	Randall Carter-Eler	Classroom 26	1	2L4' T12 EE/EEMAG	1	0.1	1L4' T8 28w/ELEE HI/NEW	1	0.0	2,520	INCLUDED ABOVE		25
IN	683	Randall Carter-Eler	Classroom 26	1	4L4' T12 EE/EEMAG-8'	4	0.6	2L4' T8 28w/ELEE HI/NEW-8'	4	0.3	2,520	OCC SENSOR CEILING	1	194
IN	684	Randall Carter-Eler	Classroom 26	1	2L4' T12 EE/EEMAG	2	0.1	1L4' T8 28w/ELEE HI/NEW	2	0.1	2,520	INCLUDED ABOVE		50
IN	685	Randall Carter-Eler	Bath 26	1	2x13W COMPACT HARDV	1	0.0	NO RETRO		0.0	3,320	TIMER WALLSWITCH 1GANG	1	30
IN	686	Randall Carter-Eler	Classroom 25	1	4L4' T12 EE/EEMAG-8'	3	0.4	2L4' T8 28w/ELEE HI/NEW-8'	3	0.2	2,520	INCLUDED ABOVE		145
IN	687	Randall Carter-Eler	Classroom 25	1	4L4' T12 EE/EEMAG-8'	6	0.8	2L4' T8 28w/ELEE HI/NEW-8'	6	0.4	2,520	OCC SENSOR CEILING	1	290
IN	688	Randall Carter-Eler	Bath 25	1	2x13W COMPACT HARDV	1	0.0	NO RETRO		0.0	3,320	NO RETRO		
IN	689	Randall Carter-Eler	Bldg Mt Fixture 1	ext	250W HI PRESSURE SOD	11	3.2	133 WATT LED/NEW	11	1.5	4,380	NO RETRO		
IN	690	Randall Carter-Eler	Bldg Mt Fixture 1	ext	250W HI PRESSURE SOD	2	0.6	133 WATT LED/NEW	2	0.3	4,380	NO RETRO		
IN	691	Randall Carter-Eler	Bldg Mt Fixture 2	ext	50W HI PRESSURE SODI	2	0.1	26 WATT LED/NEW	2	0.1	4,380	NO RETRO		
IN	692	Board of Ed Admin	Office Asst. Business Admin.	2	2L4' T8 U/EL	1	0.1	2L2' T8 15w/ELEE HI/RFL	1	0.0	2,600	OCC SENSOR WALLSWITCH	1	26
IN	693	Board of Ed Admin	Office Asst. Business Admin.	2	2L4' T8 32w/EL	2	0.1	2L4' T8 28w/ELEE HI/RFL	2	0.1	2,600	INCLUDED ABOVE		100
IN	694	Board of Ed Admin	Office Staff Accountant	2	4L4' T8 32w/EL	2	0.2	2L4' T8 28w/ELEE HI/RFL	2	0.1	2,600	OCC SENSOR WALLSWITCH	1	100
IN	695	Board of Ed Admin	Office Open General Office Spac	2	4L4' T8 32w/EL	9	1.0	2L4' T8 28w/ELEE HI/RFL	9	0.6	2,600	NO RETRO		
IN	696	Board of Ed Admin	Office Open General Office Spac	2	2L4' T8 U/EL	3	0.2	2L2' T8 15w/ELEE HI/RFL	3	0.1	2,600	NO RETRO		
IN	697	Board of Ed Admin	Office Business Administrator	2	4L4' T8 32w/EL	4	0.4	2L4' T8 28w/ELEE HI/RFL	4	0.3	2,600	OCC SENSOR CEILING	1	200
IN	698	Board of Ed Admin	Office Admin. Asst.	2	4L4' T8 32w/EL	2	0.2	2L4' T8 28w/ELEE HI/RFL	2	0.1	2,600	OCC SENSOR WALLSWITCH	1	100
IN	699	Board of Ed Admin	Office Copy	2	4L4' T8 32w/EL	2	0.2	2L4' T8 28w/ELEE HI/RFL	2	0.1	2,600	OCC SENSOR WALLSWITCH	1	100
IN	700	Board of Ed Admin	Bath Men	2	90W INCANDESCENT	1	0.1	21 WATT LED SI/LED21Par38/D	1	0.0	2,600	OCC SENSOR CEIL DT 1GAN	1	16
IN	701	Board of Ed Admin	Bath Men	2	4L4' T8 32w/EL	1	0.1	2L4' T8 28w/ELEE HI/RFL	1	0.1	2,600	INCLUDED ABOVE		50
IN	702	Board of Ed Admin	Bath Men	2	2L4' T8 32w/EL	2	0.1	2L4' T8 28w/ELEE LO	2	0.1	2,600	INCLUDED ABOVE		66
IN	703	Board of Ed Admin	Bath Women	2	90W INCANDESCENT	1	0.1	21 WATT LED SI/LED21Par38/D	1	0.0	2,600	OCC SENSOR CEIL DT 1GAN	1	16
IN	704	Board of Ed Admin	Bath Women	2	4L4' T8 32w/EL	1	0.1	2L4' T8 28w/ELEE HI/RFL	1	0.1	2,600	INCLUDED ABOVE		50
IN	705	Board of Ed Admin	Bath Women	2	2L4' T8 32w/EL	2	0.1	2L4' T8 28w/ELEE LO	2	0.1	2,600	INCLUDED ABOVE		66
IN	706	Board of Ed Admin	Bath Handicap	2	4L4' T8 32w/EL	1	0.1	2L4' T8 28w/ELEE HI/RFL	1	0.1	2,600	OCC SENSOR WALLSWITCH	1	50
IN	707	Board of Ed Admin	Office Open Student Support	2	4L4' T8 32w/EL	4	0.4	2L4' T8 28w/ELEE HI/RFL	4	0.3	2,600	OCC SENSOR CEILING	1	200
IN	708	Board of Ed Admin	Office Student Support 1	2	4L4' T8 32w/EL	4	0.4	2L4' T8 28w/ELEE HI/RFL	4	0.3	2,600	OCC SENSOR CEILING	1	200
IN	709	Board of Ed Admin	Office Student Support 2	2	4L4' T8 32w/EL	4	0.4	2L4' T8 28w/ELEE HI/RFL	4	0.3	2,600	OCC SENSOR WALLSWITCH	1	200
IN	710	Board of Ed Admin	Closet Clean	2	32W COMPACT SCREWIN	1	0.0	NO RETRO		0.0	2,600	TIMER WALLSWITCH 1GANG	1	25
IN	711	Board of Ed Admin	Office 3	2	2L4' T8 U/EL	4	0.2	2L2' T8 15w/ELEE HI/RFL	4	0.1	2,600	OCC SENSOR WALLSWITCH	1	103
IN	712	Board of Ed Admin	Office Human Resources 1	2	3L4' T8 32w/EL	2	0.2	2L4' T8 28w/ELEE HI/RFL	2	0.1	2,600	OCC SENSOR WALLSWITCH	1	100
IN	713	Board of Ed Admin	Office Athletic Director	2	4L4' T8 32w/EL	4	0.4	2L4' T8 28w/ELEE HI/RFL	4	0.3	2,600	OCC SENSOR WALLSWITCH	1	200
IN	714	Board of Ed Admin	Office Elementary Director	2	4L4' T8 32w/EL	4	0.4	2L4' T8 28w/ELEE HI/RFL	4	0.3	2,600	OCC SENSOR WALLSWITCH	1	200
IN	715	Board of Ed Admin	Office Secondary Education	2	4L4' T8 32w/EL	4	0.4	2L4' T8 28w/ELEE HI/RFL	4	0.3	2,600	OCC SENSOR WALLSWITCH	1	200
IN	716	Board of Ed Admin	Office Asst Super Intendant	2	2L4' T8 U/EL	6	0.4	2L2' T8 15w/ELEE HI/RFL	6	0.2	2,600	OCC SENSOR CEILING	1	154
IN	717	Board of Ed Admin	Office Open General Office Spac	2	4L4' T8 32w/EL	8	0.9	2L4' T8 28w/ELEE HI/RFL	8	0.5	2,600	NO RETRO		
IN	718	Board of Ed Admin	Office Open General Office Spac	2	2L4' T8 U/EL	8	0.5	2L2' T8 15w/ELEE HI/RFL	8	0.3	2,600	NO RETRO		
IN	719	Board of Ed Admin	Office Super Intendant	2	4L4' T8 32w/EL	6	0.7	2L4' T8 28w/ELEE HI/RFL	6	0.4	2,600	NO RETRO		
IN	720	Board of Ed Admin	Conference Super Intendant	2	4L4' T12 EE/EEMAG	8	1.1	4L4' T8 28w/ELEE LO (2Lx2 BAL	8	0.7	2,600	NO RETRO		

In or Out	Line	Building Name	Location	Fl	Pre Fixture Description	Pre Qty	Pre kW	Post Fixture Description	Post Qty	Post kW	Annual Hours	*Control Description*	*Control Qty*	Control kWH Saved
IN	721	Board of Ed Admin	Conference 2	2	4L4' T12 EE/EEMAG	6	0.8	2L4' T8 28w/ELEE HI/RFL	6	0.4	2,600	OCC SENSOR WALLSWITCH	1	300
IN	722	Board of Ed Admin	Lounge Lunch Room	2	3L4' T8 32w/EL	2	0.2	3L4' T8 28w/ELEE LO	2	0.1	1,820	ALREADY EXISTS		
IN	723	Board of Ed Admin	Office 4	2	2L4' T8 32w/EL	2	0.1	1L4' T8 28w/ELEE HI/NEW	2	0.1	2,600	OCC SENSOR WALLSWITCH	1	51
IN	724	Board of Ed Admin	Office Human Resources 2	2	4L4' T8 32w/EL-8'	2	0.2	2L4' T8 28w/ELEE HI/NEW-8'	2	0.1	2,600	OCC SENSOR CEILING	1	100
IN	725	Board of Ed Admin	Office Human Resources 3	2	4L4' T8 32w/EL	4	0.4	2L4' T8 28w/ELEE HI/RFL	4	0.3	2,600	OCC SENSOR CEILING	1	200
IN	726	Board of Ed Admin	Hall Human Resources 3 To Cor	2	2L4' T8 U/EL	4	0.2	2L2' T8 15w/ELEE HI/RFL	4	0.1	2,600	NO RETRO		
IN	727	Board of Ed Admin	Lobby Main	2	2L4' T8 32w/EL	8	0.5	2L4' T8 28w/ELEE LO	8	0.3	2,600	NO RETRO		
IN	728	Board of Ed Admin	Hall Vestibule Main	2	2L4' T8 32w/EL	1	0.1	2L4' T8 28w/ELEE LO	1	0.0	2,600	NO RETRO		
IN	729	Board of Ed Admin	Office Payroll	2	3L2' T8 17w/EL	4	0.2	2L2' T8 15w/ELEE HI/RFL	4	0.1	2,600	OCC SENSOR CEILING	1	103
IN	730	Board of Ed Admin	Office Payroll	2	2L4' T8 U/EL	1	0.1	2L2' T8 15w/ELEE HI/RFL	1	0.0	2,600	INCLUDED ABOVE		26
IN	731	Board of Ed Admin	Office Health Benefits	2	4L4' T8 32w/EL	2	0.2	2L4' T8 28w/ELEE HI/RFL	2	0.1	2,600	OCC SENSOR WALLSWITCH	1	100
IN	732	Board of Ed Admin	Office 5	2	4L4' T12 EE/EEMAG-8'	2	0.3	2L4' T8 28w/ELEE HI/NEW-8'	2	0.1	2,600	OCC SENSOR WALLSWITCH	1	100
IN	733	Board of Ed Admin	Hall Business Admin. To Athletic	2	2L4' T8 U/EL	9	0.5	2L2' T8 15w/ELEE HI/RFL	9	0.3	2,600	NO RETRO		
IN	734	Board of Ed Admin	Stair	s	2L4' T8 32w/EL	3	0.2	1L4' T8 28w/ELEE HI/NEW	3	0.1	2,600	NO RETRO		
IN	735	Board of Ed Admin	Hall By Womens Bath	1	2L4' T8 32w/EL	1	0.1	1L4' T8 28w/ELEE HI/NEW	1	0.0	2,600	NO RETRO		
IN	736	Board of Ed Admin	Hall By Womens Bath	1	2L4' T8 U/EL	1	0.1	2L2' T8 15w/ELEE HI/RFL	1	0.0	2,600	NO RETRO		
IN	737	Board of Ed Admin	Storage 2	1	2L4' T8 32w/EL	2	0.1	1L4' T8 28w/ELEE HI/NEW	2	0.1	2,600	NO RETRO		
IN	738	Board of Ed Admin	Storage 3	1	2L4' T8 32w/EL	4	0.2	1L4' T8 28w/ELEE HI/NEW	4	0.1	2,600	NO RETRO		
IN	739	Board of Ed Admin	Bath Women	1	2L4' T8 32w/EL	1	0.1	2L4' T8 28w/ELEE LO	1	0.0	2,600	OCC SENSOR CEIL DT 1GAN	1	33
IN	740	Board of Ed Admin	Closet Telephone	1	2L4' T12 EE/EEMAG	6	0.4	1L4' T8 28w/ELEE HI/NEW	6	0.2	2,600	TIMER WALLSWITCH 1GANG	1	154
IN	741	Board of Ed Admin	Hall By Stairs	1	2L4' T8 32w/EL	4	0.2	1L4' T8 28w/ELEE HI/NEW	4	0.1	2,600	NO RETRO		
IN	742	Board of Ed Admin	Bath Men	1	2L4' T8 32w/EL	4	0.2	2L4' T8 28w/ELEE LO	4	0.2	2,600	OCC SENSOR CEIL DT 1GAN	1	131
IN	743	Board of Ed Admin	Hall Technology Department	1	2L4' T8 32w/EL	4	0.2	1L4' T8 28w/ELEE HI/NEW	4	0.1	2,600	NO RETRO		
IN	744	Board of Ed Admin	Office Open Computer Center	1	4L4' T8 32w/EL	2	0.2	2L4' T8 28w/ELEE HI/RFL	2	0.1	2,600	OCC SENSOR WALLSWITCH	1	100
IN	745	Board of Ed Admin	Office Computer Center	1	2L4' T8 U/EL	4	0.2	2L2' T8 15w/ELEE HI/RFL	4	0.1	2,600	OCC SENSOR CEILING	1	103
IN	746	Board of Ed Admin	Office Open Computer Center 2	1	4L4' T8 32w/EL	4	0.4	2L4' T8 28w/ELEE HI/RFL	4	0.3	2,600	NO RETRO		
IN	747	Board of Ed Admin	Office Open Computer Center 2	1	2L4' T8 U/EL	4	0.2	2L2' T8 15w/ELEE HI/RFL	4	0.1	2,600	NO RETRO		
IN	748	Board of Ed Admin	Office Open Server Room	1	4L4' T12 EE/EEMAG	3	0.4	2L4' T8 28w/ELEE HI/NEW	3	0.2	2,600	OCC SENSOR CEILING	1	150
IN	749	Board of Ed Admin	Office Open Server Room	1	2L4' T12 EE/EEMAG	2	0.1	1L4' T8 28w/ELEE HI/NEW	2	0.1	2,600	INCLUDED ABOVE		51
IN	750	Board of Ed Admin	Office Open Server Room	1	2L2' T12 STD/STD	1	0.1	2L2' T8 15w/ELEE LO/NEW	1	0.0	2,600	INCLUDED ABOVE		19
IN	751	Board of Ed Admin	Office Lead Tech	1	4L4' T8 32w/EL	3	0.3	2L4' T8 28w/ELEE HI/RFL	3	0.2	2,600	OCC SENSOR WALLSWITCH	1	150
IN	752	Board of Ed Admin	Office Custodian	1	2L4' T12 EE/EEMAG	1	0.1	2L4' T8 28w/ELEE LO	1	0.0	2,600	OCC SENSOR WALLSWITCH	1	33
IN	753	Board of Ed Admin	Office 3	1	4L4' T8 32w/EL	2	0.2	2L4' T8 28w/ELEE HI/RFL	2	0.1	2,600	OCC SENSOR WALLSWITCH	1	100
IN	754	Board of Ed Admin	Office 4	1	4L4' T8 32w/EL	2	0.2	2L4' T8 28w/ELEE HI/RFL	2	0.1	2,600	OCC SENSOR WALLSWITCH	1	100
IN	755	Board of Ed Admin	Mechanical Boiler	1	2L4' T8 32w/EL	4	0.2	2L4' T8 28w/ELEE LO	4	0.2	2,600	TIMER WALLSWITCH 1GANG	1	131
IN	756	Board of Ed Admin	Lobby Building Services	1	2L4' T8 U/EL	4	0.2	2L2' T8 15w/ELEE HI/RFL	4	0.1	2,600	NO RETRO		
IN	757	Board of Ed Admin	Lobby Building Services	1	2x13W COMPACT HARDW	1	0.0	NO RETRO		0.0	2,600	NO RETRO		
IN	758	Board of Ed Admin	Office 5	1	2L4' T8 32w/EL	3	0.2	2L4' T8 28w/ELEE LO	3	0.1	2,600	NO RETRO		
IN	759	Board of Ed Admin	Office 5	1	2L4' T8 U/EL	3	0.2	2L2' T8 15w/ELEE HI/RFL	3	0.1	2,600	NO RETRO		
IN	760	Board of Ed Admin	Storage 1	1	2L4' T8 32w/EL	1	0.1	1L4' T8 28w/ELEE HI/NEW	1	0.0	2,600	NO RETRO		

In or Out	Line	Building Name	Location	Fl	Pre Fixture Description	Pre Qty	Pre kW	Post Fixture Description	Post Qty	Post kW	Annual Hours	*Control Description*	*Control Qty*	Control kWH Saved
IN	761	Board of Ed Admin	Hall Print Shop	1	2L4' T8 U/EL	1	0.1	2L2' T8 15w/ELEE HI/RFL	1	0.0	2,600	NO RETRO		
IN	762	Board of Ed Admin	Office Open Print Shop	1	4L4' T8 32w/EL	5	0.6	2L4' T8 28w/ELEE HI/RFL	5	0.3	2,600	NO RETRO		
IN	763	Board of Ed Admin	Office Open Print Shop	1	2L4' T8 U/EL	5	0.3	2L2' T8 15w/ELEE HI/RFL	5	0.2	2,600	NO RETRO		
IN	764	Board of Ed Admin	Shop Wood	1	3L4' T8 32w/EL	12	1.1	3L4' T8 28w/ELEE LO	12	0.8	2,600	NO RETRO		
IN	765	Board of Ed Admin	Warehouse Wood	1	2L4' T8 32w/EL	15	0.9	2L4' T8 28w/ELEE LO	15	0.6	2,600	OCC. SENSOR ON HI BAY FI	15	491
IN	766	Board of Ed Admin	Office Warehouse	1	3L2' T8 17w/EL	1	0.0	2L2' T8 15w/ELEE HI/RFL	1	0.0	2,600	OCC SENSOR CEILING	1	26
IN	767	Board of Ed Admin	Hall By Break Room	1	2L4' T8 U/EL	2	0.1	2L2' T8 15w/ELEE HI/RFL	2	0.1	2,600	OCC SENSOR WALLSWITCH	1	51
IN	768	Board of Ed Admin	Lounge Break Room	1	2L4' T8 U/EL	4	0.2	2L2' T8 15w/ELEE HI/RFL	4	0.1	1,820	ALREADY EXISTS		
IN	769	Board of Ed Admin	Office Open Stock Room	1	2L4' T8 32w/EL	6	0.4	1L4' T8 28w/ELEE HI/NEW	6	0.2	2,600	NO RETRO		
IN	770	Board of Ed Admin	Office Open Stock Room	1	2L4' T8 32w/EL	1	0.1	1L4' T8 28w/ELEE HI/NEW	1	0.0	2,600	NO RETRO		
IN	771	Board of Ed Admin	Office Open Stock Room	1	32W COMPACT SCREWIN	5	0.2	NO RETRO		0.2	2,600	NO RETRO		
IN	772	Board of Ed Admin	Office Stock Room	1	2L4' T8 32w/EL	4	0.2	1L4' T8 28w/ELEE HI/NEW	4	0.1	2,600	OCC SENSOR WALLSWITCH	1	103
IN	773	Board of Ed Admin	Office 6	1	2L4' T8 32w/EL	2	0.1	2L4' T8 28w/ELEE LO	2	0.1	2,600	NO RETRO		
IN	774	Board of Ed Admin	Office 6	1	2L4' T8 U/EL	2	0.1	2L2' T8 15w/ELEE HI/RFL	2	0.1	2,600	NO RETRO		
IN	775	Board of Ed Admin	Conference 6	1	2L4' T8 32w/EL	6	0.4	2L4' T8 28w/ELEE LO	6	0.3	2,600	NO RETRO		
IN	776	Board of Ed Admin	Office 7	1	4L4' T8 32w/EL	4	0.4	2L4' T8 28w/ELEE HI/RFL	4	0.3	2,600	OCC SENSOR WALLSWITCH	1	200
IN	777	Board of Ed Admin	Office 8	1	2L4' T8 32w/EL	4	0.2	2L4' T8 28w/ELEE LO	4	0.2	2,600	OCC SENSOR CEILING	1	131
IN	778	Board of Ed Admin	Office Reception	1	2L2' T8 17w/EL	4	0.1	2L2' T8 15w/ELEE LO	4	0.1	2,600	NO RETRO		
IN	779	Board of Ed Admin	Bldg Mt Fixture 1	ext	50W HI PRESSURE SODI	2	0.1	26 WATT LED/NEW	2	0.1	2,600	NO RETRO		
IN	780	Board of Ed Admin	Bldg Mt Fixture 2	ext	100W INCANDESCENT	18	1.8	21 WATT LED SI/LED21Par38/D	18	0.4	2,600	NO RETRO		
IN	781	Board of Ed Admin	Bldg Mt Fixture 2	ext	100W INCANDESCENT	4	0.4	21 WATT LED SI/LED21Par38/D	4	0.1	2,600	NO RETRO		
IN	782	Board of Ed Admin	Bldg Mt Fixture 3	ext	250W HI PRESSURE SOD	4	1.2	133 WATT LED/NEW	4	0.5	2,600	NO RETRO		
IN	783	Ryerson-Elementar	Classroom 11	1	4L4' T12 EE/EEMAG-8'	3	0.4	2L4' T8 28w/ELEE HI/NEW-8'	3	0.2	2,520	INCLUDED ABOVE		145
IN	784	Ryerson-Elementar	Classroom 11	1	4L4' T12 EE/EEMAG-8'	6	0.8	2L4' T8 28w/ELEE HI/NEW-8'	6	0.4	2,520	OCC SENSOR CEILING	1	290
IN	785	Ryerson-Elementar	Bath 11	1	13W COMPACT HARDWIR	1	0.0	NO RETRO		0.0	3,320	TIMER WALLSWITCH 1GANG	1	15
IN	786	Ryerson-Elementar	Classroom 10	1	4L4' T12 EE/EEMAG-8'	3	0.4	2L4' T8 28w/ELEE HI/NEW-8'	3	0.2	2,520	INCLUDED ABOVE		145
IN	787	Ryerson-Elementar	Classroom 10	1	4L4' T12 EE/EEMAG-8'	6	0.8	2L4' T8 28w/ELEE HI/NEW-8'	6	0.4	2,520	OCC SENSOR CEILING	1	290
IN	788	Ryerson-Elementar	Bath 10	1	13W COMPACT HARDWIR	1	0.0	NO RETRO		0.0	3,320	TIMER WALLSWITCH 1GANG	1	15
IN	789	Ryerson-Elementar	Classroom 12	1	4L4' T12 EE/EEMAG-8'	3	0.4	2L4' T8 28w/ELEE HI/NEW-8'	3	0.2	2,520	INCLUDED ABOVE		145
IN	790	Ryerson-Elementar	Classroom 12	1	4L4' T12 EE/EEMAG-8'	6	0.8	2L4' T8 28w/ELEE HI/NEW-8'	6	0.4	2,520	OCC SENSOR CEILING	1	290
IN	791	Ryerson-Elementar	Bath 12	1	13W COMPACT HARDWIR	1	0.0	NO RETRO		0.0	3,320	TIMER WALLSWITCH 1GANG	1	15
IN	792	Ryerson-Elementar	Classroom 9	1	4L4' T12 EE/EEMAG-8'	3	0.4	2L4' T8 28w/ELEE HI/NEW-8'	3	0.2	2,520	INCLUDED ABOVE		145
IN	793	Ryerson-Elementar	Classroom 9	1	4L4' T12 EE/EEMAG-8'	6	0.8	2L4' T8 28w/ELEE HI/NEW-8'	6	0.4	2,520	OCC SENSOR CEILING	1	290
IN	794	Ryerson-Elementar	Bath 9	1	13W COMPACT HARDWIR	1	0.0	NO RETRO		0.0	3,320	TIMER WALLSWITCH 1GANG	1	15
IN	795	Ryerson-Elementar	Classroom 13	1	4L4' T12 EE/EEMAG-8'	3	0.4	2L4' T8 28w/ELEE HI/NEW-8'	3	0.2	2,520	INCLUDED ABOVE		145
IN	796	Ryerson-Elementar	Classroom 13	1	4L4' T12 EE/EEMAG-8'	6	0.8	2L4' T8 28w/ELEE HI/NEW-8'	6	0.4	2,520	OCC SENSOR CEILING	1	290
IN	797	Ryerson-Elementar	Bath 13	1	13W COMPACT HARDWIR	1	0.0	NO RETRO		0.0	3,320	TIMER WALLSWITCH 1GANG	1	15
IN	798	Ryerson-Elementar	Classroom 8	1	4L4' T12 EE/EEMAG-8'	3	0.4	2L4' T8 28w/ELEE HI/NEW-8'	3	0.2	2,520	INCLUDED ABOVE		145
IN	799	Ryerson-Elementar	Classroom 8	1	4L4' T12 EE/EEMAG-8'	6	0.8	2L4' T8 28w/ELEE HI/NEW-8'	6	0.4	2,520	OCC SENSOR CEILING	1	290
IN	800	Ryerson-Elementar	Bath 8	1	13W COMPACT HARDWIR	1	0.0	NO RETRO		0.0	3,320	TIMER WALLSWITCH 1GANG	1	15

In or Out	Line	Building Name	Location	Fl	Pre Fixture Description	Pre Qty	Pre kW	Post Fixture Description	Post Qty	Post kW	Annual Hours	*Control Description*	*Control Qty*	Control kWH Saved
IN	801	Ryerson-Elementar	Office Open 14	1	4L4' T12 EE/EEMAG-8'	3	0.4	2L4' T8 28w/ELEE HI/NEW-8'	3	0.2	2,720	INCLUDED ABOVE		157
IN	802	Ryerson-Elementar	Office Open 14	1	4L4' T12 EE/EEMAG-8'	6	0.8	2L4' T8 28w/ELEE HI/NEW-8'	6	0.4	2,720	OCC SENSOR CEILING	1	313
IN	803	Ryerson-Elementar	Bath 14	1	13W COMPACT HARDWIR	1	0.0	NO RETRO		0.0	3,320	TIMER WALLSWITCH 1GANG	1	15
IN	804	Ryerson-Elementar	Classroom 7	1	4L4' T12 EE/EEMAG-8'	3	0.4	2L4' T8 28w/ELEE HI/NEW-8'	3	0.2	2,520	INCLUDED ABOVE		145
IN	805	Ryerson-Elementar	Classroom 7	1	4L4' T12 EE/EEMAG-8'	6	0.8	2L4' T8 28w/ELEE HI/NEW-8'	6	0.4	2,520	OCC SENSOR CEILING	1	290
IN	806	Ryerson-Elementar	Bath 7	1	13W COMPACT HARDWIR	1	0.0	NO RETRO		0.0	3,320	TIMER WALLSWITCH 1GANG	1	15
IN	807	Ryerson-Elementar	Classroom 15	1	4L4' T12 EE/EEMAG-8'	3	0.4	2L4' T8 28w/ELEE HI/NEW-8'	3	0.2	2,520	INCLUDED ABOVE		145
IN	808	Ryerson-Elementar	Classroom 15	1	4L4' T12 EE/EEMAG-8'	6	0.8	2L4' T8 28w/ELEE HI/NEW-8'	6	0.4	2,520	OCC SENSOR CEILING	1	290
IN	809	Ryerson-Elementar	Bath 15	1	13W COMPACT HARDWIR	1	0.0	NO RETRO		0.0	3,320	TIMER WALLSWITCH 1GANG	1	15
IN	810	Ryerson-Elementar	Classroom 6	1	4L4' T12 EE/EEMAG-8'	3	0.4	2L4' T8 28w/ELEE HI/NEW-8'	3	0.2	2,520	INCLUDED ABOVE		145
IN	811	Ryerson-Elementar	Classroom 6	1	4L4' T12 EE/EEMAG-8'	6	0.8	2L4' T8 28w/ELEE HI/NEW-8'	6	0.4	2,520	OCC SENSOR CEILING	1	290
IN	812	Ryerson-Elementar	Bath 6	1	13W COMPACT HARDWIR	1	0.0	NO RETRO		0.0	3,320	TIMER WALLSWITCH 1GANG	1	15
IN	813	Ryerson-Elementar	Classroom 16	1	4L4' T12 EE/EEMAG-8'	3	0.4	2L4' T8 28w/ELEE HI/NEW-8'	3	0.2	2,520	INCLUDED ABOVE		145
IN	814	Ryerson-Elementar	Classroom 16	1	4L4' T12 EE/EEMAG-8'	6	0.8	2L4' T8 28w/ELEE HI/NEW-8'	6	0.4	2,520	OCC SENSOR CEILING	1	290
IN	815	Ryerson-Elementar	Bath 16	1	13W COMPACT HARDWIR	1	0.0	NO RETRO		0.0	3,320	TIMER WALLSWITCH 1GANG	1	15
IN	816	Ryerson-Elementar	Hall 11-16	1	3L4' T8 32w/EL	13	1.1	3L4' T8 28w/ELEE LO	13	0.8	3,620	NO RETRO		
IN	817	Ryerson-Elementar	Hall 26 To 17	1	3L4' T8 32w/EL	8	0.7	3L4' T8 28w/ELEE LO	8	0.5	3,620	NO RETRO		
IN	818	Ryerson-Elementar	Hall 26 To 17	1	2L4' T8 32w/EL	5	0.3	2L4' T8 28w/ELEE LO	5	0.2	3,620	NO RETRO		
IN	819	Ryerson-Elementar	Classroom 17	1	2L4' T12 EE/EEMAG	16	1.1	1L4' T8 28w/ELEE HI/NEW	16	0.5	2,520	OCC SENSOR CEILING	1	399
IN	820	Ryerson-Elementar	Bath 17	1	13W COMPACT HARDWIR	1	0.0	NO RETRO		0.0	3,320	TIMER WALLSWITCH 1GANG	1	15
IN	821	Ryerson-Elementar	Storage 17	1	2L4' T12 EE/EEMAG	2	0.1	1L4' T8 28w/ELEE HI/NEW	2	0.1	500	OCC SENSOR WALLSWITCH	1	10
IN	822	Ryerson-Elementar	Hall 23 To 17	1	3L4' T8 32w/EL	21	1.8	3L4' T8 28w/ELEE LO	21	1.3	3,620	NO RETRO		
IN	823	Ryerson-Elementar	Hall 23 To 17	1	3L2' T8 17w/EL	8	0.4	3L2' T8 15w/ELEE LO	8	0.3	3,620	NO RETRO		
IN	824	Ryerson-Elementar	Hall 23 To 17	1	4L4' T8 32w/EL	1	0.1	4L4' T8 28w/ELEE LO	1	0.1	3,620	NO RETRO		
IN	825	Ryerson-Elementar	Closet Paper	1	2x13W COMPACT HARDV	2	0.1	NO RETRO		0.1	500	TIMER WALLSWITCH 1GANG	1	9
IN	826	Ryerson-Elementar	Bath Women	1	2L4' T12 EE/EEMAG	1	0.1	1L4' T8 28w/ELEE HI/NEW	1	0.0	3,320	OCC SENSOR CEILING	1	33
IN	827	Ryerson-Elementar	Bath Men	1	2L4' T12 EE/EEMAG	1	0.1	1L4' T8 28w/ELEE HI/NEW	1	0.0	3,320	OCC SENSOR CEILING	1	33
IN	828	Ryerson-Elementar	Closet Clean	1	3x13W COMPACT HARDV	1	0.0	NO RETRO		0.0	500	OCC SENSOR WALLSWITCH	1	7
IN	829	Ryerson-Elementar	Office Language	1	4L4' T12 EE/EEMAG	1	0.1	2L4' T8 28w/ELEE HI/RFL	1	0.1	2,320	OCC SENSOR CEILING	1	45
IN	830	Ryerson-Elementar	Classroom 5	1	4L4' T8 32w/EL-8'	3	0.3	2L4' T8 28w/ELEE HI/NEW-8'	3	0.2	2,520	INCLUDED ABOVE		145
IN	831	Ryerson-Elementar	Classroom 5	1	4L4' T8 32w/EL-8'	6	0.7	2L4' T8 28w/ELEE HI/NEW-8'	6	0.4	2,520	OCC SENSOR CEILING	1	290
IN	832	Ryerson-Elementar	Bath 5	1	13W COMPACT HARDWIR	1	0.0	NO RETRO		0.0	3,320	TIMER WALLSWITCH 1GANG	1	15
IN	833	Ryerson-Elementar	Classroom 1	1	4L4' T12 EE/EEMAG-8'	4	0.6	2L4' T8 28w/ELEE HI/NEW-8'	4	0.3	2,520	OCC SENSOR CEILING	1	194
IN	834	Ryerson-Elementar	Classroom 1	1	4L4' T12 EE/EEMAG-8'	8	1.1	2L4' T8 28w/ELEE HI/NEW-8'	8	0.5	2,520	INCLUDED ABOVE		387
IN	835	Ryerson-Elementar	Storage 1	1	2L4' T8 32w/EL	2	0.1	1L4' T8 28w/ELEE HI/NEW	2	0.1	500	OCC SENSOR WALLSWITCH	2	10
IN	836	Ryerson-Elementar	Bath 1	1	13W COMPACT HARDWIR	1	0.0	NO RETRO		0.0	3,320	OCC SENSOR WALLSWITCH	1	15
IN	837	Ryerson-Elementar	Classroom 2A	1	2L4' T12 EE/EEMAG	4	0.3	1L4' T8 28w/ELEE HI/NEW	4	0.1	2,520	NO RETRO		
IN	838	Ryerson-Elementar	Classroom 4	1	4L4' T12 EE/EEMAG-8'	3	0.4	2L4' T8 28w/ELEE HI/NEW-8'	3	0.2	2,520	INCLUDED ABOVE		145
IN	839	Ryerson-Elementar	Classroom 4	1	4L4' T12 EE/EEMAG-8'	6	0.8	2L4' T8 28w/ELEE HI/NEW-8'	6	0.4	2,520	OCC SENSOR CEILING	1	290
IN	840	Ryerson-Elementar	Bath 4	1	13W COMPACT HARDWIR	1	0.0	NO RETRO		0.0	3,320	TIMER WALLSWITCH 1GANG	1	15

In or Out	Line	Building Name	Location	Fl	Pre Fixture Description	Pre Qty	Pre kW	Post Fixture Description	Post Qty	Post kW	Annual Hours	*Control Description*	*Control Qty*	Control kWH Saved
IN	841	Ryerson-Elementar	Classroom 2	1	4L4' T8 32w/EL-8'	4	0.4	2L4' T8 28w/ELEE HI/NEW-8'	4	0.3	2,520	INCLUDED ABOVE		194
IN	842	Ryerson-Elementar	Classroom 2	1	4L4' T8 32w/EL-8'	8	0.9	2L4' T8 28w/ELEE HI/NEW-8'	8	0.5	2,520	OCC SENSOR CEILING	1	387
IN	843	Ryerson-Elementar	Bath 2	1	13W COMPACT HARDWIR	1	0.0	NO RETRO		0.0	3,320	TIMER WALLSWITCH 1GANG	1	15
IN	844	Ryerson-Elementar	Classroom 3	1	4L4' T8 32w/EL-8'	3	0.3	2L4' T8 28w/ELEE HI/NEW-8'	3	0.2	2,520	INCLUDED ABOVE		145
IN	845	Ryerson-Elementar	Classroom 3	1	4L4' T8 32w/EL-8'	6	0.7	2L4' T8 28w/ELEE HI/NEW-8'	6	0.4	2,520	OCC SENSOR CEILING	1	290
IN	846	Ryerson-Elementar	Bath 3	1	13W COMPACT HARDWIR	1	0.0	NO RETRO		0.0	3,320	TIMER WALLSWITCH 1GANG	1	15
IN	847	Ryerson-Elementar	Classroom 24	1	4L4' T8 32w/EL	11	1.2	2L4' T8 28w/ELEE HI/RFL	11	0.7	2,520	OCC SENSOR CEILING	1	532
IN	848	Ryerson-Elementar	Classroom 24	1	1L4' T8 32w/EL	1	0.0	1L4' T8 28w/ELEE LO/STRIP KI	1	0.0	2,520	NO RETRO		
IN	849	Ryerson-Elementar	Bath 24	1	2x13W COMPACT HARDV	1	0.0	NO RETRO		0.0	3,320	TIMER WALLSWITCH 1GANG	1	30
IN	850	Ryerson-Elementar	Classroom 25	1	3L4' T8 32w/EL	21	1.8	3L4' T8 28w/ELEE LO	21	1.3	2,520	OCC SENSOR CORNER MT.	1	1,000
IN	851	Ryerson-Elementar	Classroom 26	1	4L4' T8 32w/EL	15	1.7	2L4' T8 28w/ELEE HI/RFL	15	1.0	2,520	OCC SENSOR CEILING	1	726
IN	852	Ryerson-Elementar	Stage Gym	1	72W COMPACT SCREWIN	5	0.4	NO RETRO		0.4	2,320	NO RETRO		
IN	853	Ryerson-Elementar	Stage Gym	1	300W INCANDESCENT	3	0.9	2L4' T8 28w/ELEE/NEW	3	0.1	2,320	NO RETRO		
IN	854	Ryerson-Elementar	Office Boiler Room	1	3x13W COMPACT HARDV	6	0.3	NO RETRO		0.3	2,320	NO RETRO		
IN	855	Ryerson-Elementar	Office Boiler Room	1	4L4' T8 32w/EL	1	0.1	2L4' T8 28w/ELEE HI/RFL	1	0.1	2,320	NO RETRO		
IN	856	Ryerson-Elementar	Mechanical Boiler Room	1	2L4' T12 EE/EEMAG	10	0.7	2L4' T8 28w/ELEE LO	10	0.4	500	TIMER WALLSWITCH 1GANG	2	63
IN	857	Ryerson-Elementar	Gym Main	1	150W METAL HALIDE	1	0.2	113 WATT LED/NEW	1	0.1	2,920	OCC. SENSOR ON HI BAY FI	1	99
IN	858	Ryerson-Elementar	Gym Main	1	250W METAL HALIDE	19	5.6	113 WATT LED/NEW	19	2.1	2,920	OCC. SENSOR ON HI BAY FI	19	1,881
IN	859	Ryerson-Elementar	Storage Gym	1	4L4' T8 32w/EL-8'	2	0.2	2L4' T8 28w/ELEE HI/NEW-8'	2	0.1	2,120	OCC SENSOR WALLSWITCH	1	81
IN	860	Ryerson-Elementar	Lounge Teachers	1	4L4' T8 32w/EL-8'	4	0.4	2L4' T8 28w/ELEE HI/NEW-8'	4	0.3	2,520	OCC SENSOR CEILING	1	194
IN	861	Ryerson-Elementar	Lounge Teachers	1	1L2' T8 17w/EL	1	0.0	1L2' T8 15w/ELEE LO/NEW	1	0.0	2,520	TIMER WALLSWITCH 1GANG	1	11
IN	862	Ryerson-Elementar	Office Open Portables	1	4L4' T12 EE/EEMAG-8'	12	1.7	2L4' T8 28w/ELEE HI/NEW-8'	12	0.8	2,720	OCC SENSOR CEILING	3	627
IN	863	Ryerson-Elementar	Office Open Portables	1	2L4' T12 EE/EEMAG	3	0.2	1L4' T8 28w/ELEE HI/NEW	3	0.1	2,720	INCLUDED ABOVE		81
IN	864	Ryerson-Elementar	Office Principal	1	4L4' T8 32w/EL	1	0.1	2L4' T8 28w/ELEE HI/RFL	1	0.1	2,320	OCC SENSOR CEILING	1	45
IN	865	Ryerson-Elementar	Office Principal	1	4L4' T12 EE/EEMAG	1	0.1	2L4' T8 28w/ELEE HI/NEW	1	0.1	2,320	INCLUDED ABOVE		45
IN	866	Ryerson-Elementar	Closet Principal	1	100W INCANDESCENT	1	0.1	23W COMPACT SI/29712/CF23I	1	0.0	500	TIMER WALLSWITCH 1GANG	1	3
IN	867	Ryerson-Elementar	Office Open Main	1	4L4' T12 EE/EEMAG	4	0.6	2L4' T8 28w/ELEE HI/NEW	4	0.3	2,720	OCC SENSOR CEILING	1	209
IN	868	Ryerson-Elementar	Office Open Main	1	2L4' T12 EE/EEMAG	1	0.1	1L4' T8 28w/ELEE HI/NEW	1	0.0	2,720	INCLUDED ABOVE		27
IN	869	Ryerson-Elementar	Office Open Main	1	2L4' T8 32w/EL	1	0.1	1L4' T8 28w/ELEE HI/NEW	1	0.0	2,720	INCLUDED ABOVE		27
IN	870	Ryerson-Elementar	Storage Paper	1	4L4' T8 32w/EL	1	0.1	2L4' T8 28w/ELEE HI/NEW	1	0.1	2,120	TIMER WALLSWITCH 1GANG	1	41
IN	871	Ryerson-Elementar	Storage Mailroom	1	4L4' T8 32w/EL	2	0.2	2L4' T8 28w/ELEE/NEW	2	0.1	2,120	OCC SENSOR WALLSWITCH	1	61
IN	872	Ryerson-Elementar	Bath Mailroom	1	60W INCANDESCENT	1	0.1	2L2' T8 15w/ELEE LO/NEW	1	0.0	3,320	NO RETRO		
IN	873	Ryerson-Elementar	Cafeteria Seating Area	1	4L4' T8 32w/EL	4	0.4	2L4' T8 28w/ELEE HI/RFL	4	0.3	2,720	OCC SENSOR CEILING	2	209
IN	874	Ryerson-Elementar	Cafeteria Seating Area	1	4L4' T12 EE/EEMAG	20	2.8	2L4' T8 28w/ELEE HI/RFL	20	1.3	2,720	INCLUDED ABOVE		1,044
IN	875	Ryerson-Elementar	Kitchen Prep Area	1	2L4' T8 32w/EL	6	0.4	2L4' T8 28w/ELEE LO/NEW	6	0.3	1,920	NO RETRO		
IN	876	Ryerson-Elementar	Kitchen Prep Area	1	2L4' T12 EE/EEMAG	10	0.7	2L4' T8 28w/ELEE LO/NEW	10	0.4	1,920	NO RETRO		
IN	877	Ryerson-Elementar	Hall Kitchen	1	2x13W COMPACT HARDV	2	0.1	NO RETRO		0.1	3,620	NO RETRO		
IN	878	Ryerson-Elementar	Storage Dry Goods	1	2L4' T12 EE/EEMAG	2	0.1	1L4' T8 28w/ELEE HI/NEW	2	0.1	500	NO RETRO		
IN	879	Ryerson-Elementar	Storage Clean	1	2L4' T12 EE/EEMAG	2	0.1	1L4' T8 28w/ELEE HI/NEW	2	0.1	500	NO RETRO		
IN	880	Ryerson-Elementar	Kitchen Dish Wash	1	2L4' T8 32w/EL	3	0.2	2L4' T8 28w/ELEE LO/NEW	3	0.1	1,920	TIMER WALLSWITCH 1GANG	1	73

In or Out	Line	Building Name	Location	Fl	Pre Fixture Description	Pre Qty	Pre kW	Post Fixture Description	Post Qty	Post kW	Annual Hours	*Control Description*	*Control Qty*	Control kWH Saved
IN	881	Ryerson-Elementar	Classroom 18	1	4L4' T12 EE/EEMAG-8'	3	0.4	2L4' T8 28w/ELEE HI/NEW-8'	3	0.2	2,520	INCLUDED ABOVE		145
IN	882	Ryerson-Elementar	Classroom 18	1	4L4' T12 EE/EEMAG-8'	6	0.8	2L4' T8 28w/ELEE HI/NEW-8'	6	0.4	2,520	OCC SENSOR CEILING	1	290
IN	883	Ryerson-Elementar	Bath Girls	1	4L2' T12 STD/STD	3	0.3	4L2' T8 15w/ELEE LO	3	0.2	3,320	OCC SENSOR WALLSWITCH	1	161
IN	884	Ryerson-Elementar	Bath Staff	1	100W INCANDESCENT	1	0.1	21 WATT LED SI/LED21Par38/D	1	0.0	3,320	OCC SENSOR WALLSWITCH	1	21
IN	885	Ryerson-Elementar	Bath Staff	1	2L2' T8 17w/EL	1	0.0	2L2' T8 15w/ELEE LO/NEW	1	0.0	3,320	INCLUDED ABOVE		24
IN	886	Ryerson-Elementar	Closet Clean	1	2x40W INCANDESCENTS	1	0.1	2L2' T8 15w/ELEE LO/NEW	1	0.0	500	OCC SENSOR WALLSWITCH	1	4
IN	887	Ryerson-Elementar	Bath Girls	1	4L2' T12 STD/STD	3	0.3	4L2' T8 15w/ELEE LO	3	0.2	3,320	OCC SENSOR WALLSWITCH	1	161
IN	888	Ryerson-Elementar	Bath Staff	1	100W INCANDESCENT	1	0.1	21 WATT LED SI/LED21Par38/D	1	0.0	3,320	OCC SENSOR WALLSWITCH	1	21
IN	889	Ryerson-Elementar	Bath Staff	1	2L2' T8 17w/EL	1	0.0	2L2' T8 15w/ELEE LO/NEW	1	0.0	3,320	INCLUDED ABOVE		24
IN	890	Ryerson-Elementar	Classroom 19	1	4L4' T12 EE/EEMAG-8'	3	0.4	2L4' T8 28w/ELEE HI/NEW-8'	3	0.2	2,520	INCLUDED ABOVE		145
IN	891	Ryerson-Elementar	Classroom 19	1	4L4' T12 EE/EEMAG-8'	6	0.8	2L4' T8 28w/ELEE HI/NEW-8'	6	0.4	2,520	OCC SENSOR CEILING	1	290
IN	892	Ryerson-Elementar	Office Reading Rom	1	4L4' T12 EE/EEMAG	6	0.8	2L4' T8 28w/ELEE HI/RFL	6	0.4	2,320	OCC SENSOR WALLSWITCH	1	267
IN	893	Ryerson-Elementar	Library	1	4L4' T8 32w/EL	25	2.8	2L4' T8 28w/ELEE HI/RFL	25	1.6	2,520	OCC SENSOR CEILING	1	1,210
IN	894	Ryerson-Elementar	Library Office	1	4L4' T12 EE/EEMAG	2	0.3	2L4' T8 28w/ELEE HI/RFL	2	0.1	2,520	OCC SENSOR CEILING	1	97
IN	895	Ryerson-Elementar	Storage Server	1	4L4' T12 EE/EEMAG-8'	1	0.1	2L4' T8 28w/ELEE HI/NEW-8'	1	0.1	500	TIMER WALLSWITCH 1GANG	1	10
IN	896	Ryerson-Elementar	Office Guidance	1	4L4' T12 EE/EEMAG	4	0.6	2L4' T8 28w/ELEE HI/RFL	4	0.3	2,320	OCC SENSOR WALLSWITCH	1	178
IN	897	Ryerson-Elementar	Classroom 20	1	4L4' T12 EE/EEMAG-8'	3	0.4	2L4' T8 28w/ELEE HI/NEW-8'	3	0.2	2,520	INCLUDED ABOVE		145
IN	898	Ryerson-Elementar	Classroom 20	1	4L4' T12 EE/EEMAG-8'	6	0.8	2L4' T8 28w/ELEE HI/NEW-8'	6	0.4	2,520	OCC SENSOR CEILING	1	290
IN	899	Ryerson-Elementar	Classroom 21	1	4L4' T12 EE/EEMAG-8'	3	0.4	2L4' T8 28w/ELEE HI/NEW-8'	3	0.2	2,520	INCLUDED ABOVE		145
IN	900	Ryerson-Elementar	Classroom 21	1	4L4' T12 EE/EEMAG-8'	6	0.8	2L4' T8 28w/ELEE HI/NEW-8'	6	0.4	2,520	OCC SENSOR CEILING	1	290
IN	901	Ryerson-Elementar	Classroom 22	1	4L4' T12 EE/EEMAG-8'	3	0.4	2L4' T8 28w/ELEE HI/NEW-8'	3	0.2	2,520	INCLUDED ABOVE		145
IN	902	Ryerson-Elementar	Classroom 22	1	2L4' T12 EE/EEMAG	1	0.1	1L4' T8 28w/ELEE HI/NEW	1	0.0	2,520	INCLUDED ABOVE		25
IN	903	Ryerson-Elementar	Classroom 22	1	4L4' T12 EE/EEMAG-8'	5	0.7	2L4' T8 28w/ELEE HI/NEW-8'	5	0.3	2,520	OCC SENSOR CEILING	1	242
IN	904	Ryerson-Elementar	Classroom 22	1	2L4' T12 EE/EEMAG	2	0.1	1L4' T8 28w/ELEE HI/NEW	2	0.1	2,520	INCLUDED ABOVE		50
IN	905	Ryerson-Elementar	Classroom 23	1	4L4' T12 EE/EEMAG-8'	3	0.4	2L4' T8 28w/ELEE HI/NEW-8'	3	0.2	2,520	INCLUDED ABOVE		145
IN	906	Ryerson-Elementar	Classroom 23	1	4L4' T12 EE/EEMAG-8'	6	0.8	2L4' T8 28w/ELEE HI/NEW-8'	6	0.4	2,520	OCC SENSOR CEILING	1	290
IN	907	Ryerson-Elementar	Bldg Mt Fixture 1	ext	50W HI PRESSURE SODI	7	0.5	26 WATT LED/NEW	7	0.2	4,380	NO RETRO		
IN	908	Ryerson-Elementar	Bldg Mt Fixture 2	ext	50W HI PRESSURE SODI	2	0.1	26 WATT LED/NEW	2	0.1	4,380	NO RETRO		
IN	909	Ryerson-Elementar	Bldg Mt Fixture 3	ext	50W HI PRESSURE SODI	1	0.1	23W COMPACT SI/29712/CF23I	1	0.0	4,380	NO RETRO		
IN	910	Ryerson-Elementar	Bldg Mt Fixture 4	ext	250W HI PRESSURE SOD	12	3.5	133 WATT LED/NEW	12	1.6	4,380	NO RETRO		
IN	911	Ryerson-Elementar	Bldg Mt Fixture 4	ext	250W HI PRESSURE SOD	2	0.6	133 WATT LED/NEW	2	0.3	4,380	NO RETRO		
IN	912	Ryerson-Elementar	Bldg Mt Fixture 5	ext	400W HI PRESSURE SOD	1	0.5	231 WATT LED/NEW	1	0.2	4,380	NO RETRO		
IN	913	Ryerson-Elementar	Bldg Mt Fixture 6	ext	100W HI PRESSURE SOD	1	0.1	50 WATT LED/NEW	1	0.1	4,380	NO RETRO		
IN	914	Ryerson-Elementar	Bldg Mt Fixture 7	ext	250W HI PRESSURE SOD	1	0.3	133 WATT LED/NEW	1	0.1	4,380	NO RETRO		
IN	915	James Fallon-Elem	Gym Main	1	400W METAL HALIDE	16	7.3	172 WATT LED/NEW	16	2.8	2,920	OCC. SENSOR ON HI BAY FI	16	2,411
IN	916	James Fallon-Elem	Stage	1	50W INCANDESCENT	9	0.5	20 WATT LED/NEW	9	0.2	2,920	NO RETRO		
IN	917	James Fallon-Elem	Stage	1	150W INCANDESCENT	9	1.4	20 WATT LED/NEW	9	0.2	2,920	NO RETRO		
IN	918	James Fallon-Elem	Hall Left Of Stage	1	2L2' F40 BIAX/EL	3	0.2	2L2' F40BIAX/EL28W	3	0.2	3,620	NO RETRO		
IN	919	James Fallon-Elem	Hall Right Of Stage	1	2L2' F40 BIAX/EL	3	0.2	2L2' F40BIAX/EL28W	3	0.2	3,620	NO RETRO		
IN	920	James Fallon-Elem	Bath Boys	1	2L2' F40 BIAX/EL	1	0.1	2L2' F40BIAX/EL28W	1	0.1	3,320	OCC SENSOR CEIL DT 1GAN	1	63

In or Out	Line	Building Name	Location	Fl	Pre Fixture Description	Pre Qty	Pre kW	Post Fixture Description	Post Qty	Post kW	Annual Hours	*Control Description*	*Control Qty*	Control kWH Saved
IN	921	James Fallon-Elem	Bath Boys	1	4L4' T8 32w/EL-8'	2	0.2	4L4' T8 28w/ELEE LO-8'	2	0.2	3,320	INCLUDED ABOVE		165
IN	922	James Fallon-Elem	Bath Girls	1	2L2' F40 BIAX/EL	1	0.1	2L2' F40BIAX/EL28W	1	0.1	3,320	OCC SENSOR CEIL DT 1GAN	1	63
IN	923	James Fallon-Elem	Bath Girls	1	4L4' T8 32w/EL-8'	2	0.2	4L4' T8 28w/ELEE LO-8'	2	0.2	3,320	INCLUDED ABOVE		165
IN	924	James Fallon-Elem	Hall By Baths	1	2x18W COMPACT HARDV	2	0.1	NO RETRO		0.1	3,620	TIMER WALLSWITCH 1GANG	1	83
IN	925	James Fallon-Elem	Storage Gym	1	2L2' F40 BIAX/EL	4	0.3	2L2' F40BIAX/EL28W	4	0.3	2,120	OCC SENSOR CEILING	1	160
IN	926	James Fallon-Elem	Classroom 42	1	2x18W COMPACT HARDV	4	0.2	NO RETRO		0.2	2,520	OCC SENSOR CEILING	2	115
IN	927	James Fallon-Elem	Classroom 42	1	3L4' T8 U 1.5" /EL	20	1.7	2L2' T8 15w/ELEE HI/RFL	20	0.7	2,520	INCLUDED ABOVE		499
IN	928	James Fallon-Elem	Classroom 42	1	22W CIRCLELINE HARDW	4	0.1	2L2' T8 15w/ELEE LO/NEW	4	0.1	2,520	INCLUDED ABOVE		73
IN	929	James Fallon-Elem	Classroom 41	1	3L4' T8 32w/EL	1	0.1	2L4' T8 28w/ELEE HI/RFL	1	0.1	2,520	OCC SENSOR CEILING	1	48
IN	930	James Fallon-Elem	Classroom 41	1	3L4' T8 U 1.5" /EL	11	0.9	2L2' T8 15w/ELEE HI/RFL	11	0.4	2,520	INCLUDED ABOVE		274
IN	931	James Fallon-Elem	Classroom 41	1	22W CIRCLELINE HARDW	4	0.1	2L2' T8 15w/ELEE LO/NEW	4	0.1	2,520	INCLUDED ABOVE		73
IN	932	James Fallon-Elem	Classroom 41	1	2x18W COMPACT HARDV	3	0.1	NO RETRO		0.1	2,520	INCLUDED ABOVE		86
IN	933	James Fallon-Elem	Hall By Gym	1	3L4' T8 U 1.5" /EL	5	0.4	2L2' T8 15w/ELEE HI/RFL	5	0.2	3,620	NO RETRO		
IN	934	James Fallon-Elem	Hall By Gym	1	3L2' T8 17w/EL	1	0.0	3L2' T8 15w/ELEE LO	1	0.0	3,620	NO RETRO		
IN	935	James Fallon-Elem	Hall By Gym	1	2L4' T8 32w/EL	7	0.4	2L4' T8 28w/ELEE LO	7	0.3	3,620	NO RETRO		
IN	936	James Fallon-Elem	Hall By Gym	1	2L2' F40 BIAX/EL	2	0.1	2L2' F40BIAX/EL28W	2	0.1	3,620	NO RETRO		
IN	937	James Fallon-Elem	Classroom 39	1	3L4' T8 32w/EL	9	0.8	2L4' T8 28w/ELEE HI/RFL	9	0.6	2,520	OCC SENSOR CEILING	1	435
IN	938	James Fallon-Elem	Classroom 39	1	1L2' F40 BIAX/EL	2	0.1	1L2' F40BIAX/EL28W	2	0.1	2,520	TIMER WALLSWITCH 1GANG	1	48
IN	939	James Fallon-Elem	Classroom 39	1	1L2' F40 BIAX/EL	2	0.1	1L2' F40BIAX/EL28W	2	0.1	2,520	TIMER WALLSWITCH 1GANG	1	48
IN	940	James Fallon-Elem	Classroom 39	1	2x18W COMPACT HARDV	1	0.0	NO RETRO		0.0	2,520	OCC SENSOR WALLSWITCH	1	29
IN	941	James Fallon-Elem	Bath 39	1	60W INCANDESCENT	1	0.1	11W COMPACT SI/29708/CF11	1	0.0	3,320	TIMER WALLSWITCH 1GANG	1	11
IN	942	James Fallon-Elem	Classroom 38	1	3L4' T8 32w/EL	9	0.8	2L4' T8 28w/ELEE HI/RFL	9	0.6	2,520	OCC SENSOR CEILING	1	435
IN	943	James Fallon-Elem	Classroom 38	1	1L2' F40 BIAX/EL	2	0.1	1L2' F40BIAX/EL28W	2	0.1	2,520	TIMER WALLSWITCH 1GANG	1	48
IN	944	James Fallon-Elem	Classroom 38	1	1L2' F40 BIAX/EL	2	0.1	1L2' F40BIAX/EL28W	2	0.1	2,520	TIMER WALLSWITCH 1GANG	1	48
IN	945	James Fallon-Elem	Classroom 38	1	2x18W COMPACT HARDV	1	0.0	NO RETRO		0.0	2,520	OCC SENSOR WALLSWITCH	1	29
IN	946	James Fallon-Elem	Bath 38	1	60W INCANDESCENT	1	0.1	11W COMPACT SI/29708/CF11	1	0.0	3,320	TIMER WALLSWITCH 1GANG	1	11
IN	947	James Fallon-Elem	Classroom 37	1	3L4' T8 32w/EL	9	0.8	2L4' T8 28w/ELEE HI/RFL	9	0.6	2,520	OCC SENSOR CEILING	1	435
IN	948	James Fallon-Elem	Classroom 37	1	1L2' F40 BIAX/EL	2	0.1	1L2' F40BIAX/EL28W	2	0.1	2,520	TIMER WALLSWITCH 1GANG	1	48
IN	949	James Fallon-Elem	Classroom 37	1	1L2' F40 BIAX/EL	2	0.1	1L2' F40BIAX/EL28W	2	0.1	2,520	TIMER WALLSWITCH 1GANG	1	48
IN	950	James Fallon-Elem	Classroom 37	1	2x18W COMPACT HARDV	1	0.0	NO RETRO		0.0	2,520	OCC SENSOR WALLSWITCH	1	29
IN	951	James Fallon-Elem	Bath 37	1	60W INCANDESCENT	1	0.1	11W COMPACT SI/29708/CF11	1	0.0	3,320	TIMER WALLSWITCH 1GANG	1	11
IN	952	James Fallon-Elem	Classroom 36	1	3L4' T8 32w/EL	9	0.8	2L4' T8 28w/ELEE HI/RFL	9	0.6	2,520	OCC SENSOR CEILING	1	435
IN	953	James Fallon-Elem	Classroom 36	1	1L2' F40 BIAX/EL	2	0.1	1L2' F40BIAX/EL28W	2	0.1	2,520	TIMER WALLSWITCH 1GANG	1	48
IN	954	James Fallon-Elem	Classroom 36	1	1L2' F40 BIAX/EL	2	0.1	1L2' F40BIAX/EL28W	2	0.1	2,520	TIMER WALLSWITCH 1GANG	1	48
IN	955	James Fallon-Elem	Classroom 36	1	2x18W COMPACT HARDV	1	0.0	NO RETRO		0.0	2,520	OCC SENSOR WALLSWITCH	1	29
IN	956	James Fallon-Elem	Bath 36	1	60W INCANDESCENT	1	0.1	11W COMPACT SI/29708/CF11	1	0.0	3,320	TIMER WALLSWITCH 1GANG	1	11
IN	957	James Fallon-Elem	Classroom 35	1	3L4' T8 32w/EL	9	0.8	2L4' T8 28w/ELEE HI/RFL	9	0.6	2,520	OCC SENSOR CEILING	1	435
IN	958	James Fallon-Elem	Classroom 35	1	1L2' F40 BIAX/EL	2	0.1	1L2' F40BIAX/EL28W	2	0.1	2,520	TIMER WALLSWITCH 1GANG	1	48
IN	959	James Fallon-Elem	Classroom 35	1	1L2' F40 BIAX/EL	2	0.1	1L2' F40BIAX/EL28W	2	0.1	2,520	TIMER WALLSWITCH 1GANG	1	48
IN	960	James Fallon-Elem	Classroom 35	1	2x18W COMPACT HARDV	1	0.0	NO RETRO		0.0	2,520	OCC SENSOR WALLSWITCH	1	29

In or Out	Line	Building Name	Location	Fl	Pre Fixture Description	Pre Qty	Pre kW	Post Fixture Description	Post Qty	Post kW	Annual Hours	*Control Description*	*Control Qty*	Control kWH Saved
IN	961	James Fallon-Elem	Bath 35	1	60W INCANDESCENT	1	0.1	11W COMPACT SI/29708/CF11I	1	0.0	3,320	TIMER WALLSWITCH 1GANG	1	11
IN	962	James Fallon-Elem	Classroom 34	1	3L4' T8 32w/EL	9	0.8	2L4' T8 28w/ELEE HI/RFL	9	0.6	2,520	OCC SENSOR CEILING	1	435
IN	963	James Fallon-Elem	Classroom 34	1	1L2' F40 BIAX/EL	2	0.1	1L2' F40BIAX/EL28W	2	0.1	2,520	TIMER WALLSWITCH 1GANG	1	48
IN	964	James Fallon-Elem	Classroom 34	1	1L2' F40 BIAX/EL	2	0.1	1L2' F40BIAX/EL28W	2	0.1	2,520	TIMER WALLSWITCH 1GANG	1	48
IN	965	James Fallon-Elem	Classroom 34	1	2x18W COMPACT HARDV	1	0.0	NO RETRO		0.0	2,520	OCC SENSOR WALLSWITCH	1	29
IN	966	James Fallon-Elem	Bath 34	1	60W INCANDESCENT	1	0.1	11W COMPACT SI/29708/CF11I	1	0.0	3,320	TIMER WALLSWITCH 1GANG	1	11
IN	967	James Fallon-Elem	Classroom 33	1	3L4' T8 32w/EL	9	0.8	2L4' T8 28w/ELEE HI/RFL	9	0.6	2,520	OCC SENSOR CEILING	1	435
IN	968	James Fallon-Elem	Classroom 33	1	1L2' F40 BIAX/EL	2	0.1	1L2' F40BIAX/EL28W	2	0.1	2,520	TIMER WALLSWITCH 1GANG	1	48
IN	969	James Fallon-Elem	Classroom 33	1	1L2' F40 BIAX/EL	2	0.1	1L2' F40BIAX/EL28W	2	0.1	2,520	TIMER WALLSWITCH 1GANG	1	48
IN	970	James Fallon-Elem	Classroom 33	1	2x18W COMPACT HARDV	1	0.0	NO RETRO		0.0	2,520	OCC SENSOR WALLSWITCH	1	29
IN	971	James Fallon-Elem	Bath 33	1	60W INCANDESCENT	1	0.1	11W COMPACT SI/29708/CF11I	1	0.0	3,320	TIMER WALLSWITCH 1GANG	1	11
IN	972	James Fallon-Elem	Classroom 32	1	3L4' T8 32w/EL	9	0.8	2L4' T8 28w/ELEE HI/RFL	9	0.6	2,520	OCC SENSOR CEILING	1	435
IN	973	James Fallon-Elem	Classroom 32	1	1L2' F40 BIAX/EL	2	0.1	1L2' F40BIAX/EL28W	2	0.1	2,520	TIMER WALLSWITCH 1GANG	1	48
IN	974	James Fallon-Elem	Classroom 32	1	1L2' F40 BIAX/EL	2	0.1	1L2' F40BIAX/EL28W	2	0.1	2,520	TIMER WALLSWITCH 1GANG	1	48
IN	975	James Fallon-Elem	Classroom 32	1	2x18W COMPACT HARDV	1	0.0	NO RETRO		0.0	2,520	OCC SENSOR WALLSWITCH	1	29
IN	976	James Fallon-Elem	Bath 32	1	60W INCANDESCENT	1	0.1	11W COMPACT SI/29708/CF11I	1	0.0	3,320	TIMER WALLSWITCH 1GANG	1	11
IN	977	James Fallon-Elem	Classroom 31	1	3L4' T8 32w/EL	9	0.8	2L4' T8 28w/ELEE HI/RFL	9	0.6	2,520	OCC SENSOR CEILING	1	435
IN	978	James Fallon-Elem	Classroom 31	1	1L2' F40 BIAX/EL	2	0.1	1L2' F40BIAX/EL28W	2	0.1	2,520	TIMER WALLSWITCH 1GANG	1	48
IN	979	James Fallon-Elem	Classroom 31	1	1L2' F40 BIAX/EL	2	0.1	1L2' F40BIAX/EL28W	2	0.1	2,520	TIMER WALLSWITCH 1GANG	1	48
IN	980	James Fallon-Elem	Classroom 31	1	2x18W COMPACT HARDV	1	0.0	NO RETRO		0.0	2,520	OCC SENSOR WALLSWITCH	1	29
IN	981	James Fallon-Elem	Bath 31	1	60W INCANDESCENT	1	0.1	11W COMPACT SI/29708/CF11I	1	0.0	3,320	TIMER WALLSWITCH 1GANG	1	11
IN	982	James Fallon-Elem	Closet Paper	1	2L4' T8 32w/EL	2	0.1	1L4' T8 28w/ELEE HI/NEW	2	0.1	500	OCC SENSOR WALLSWITCH	1	10
IN	983	James Fallon-Elem	Closet Server	1	2L4' T8 32w/EL	1	0.1	1L4' T8 28w/ELEE HI/NEW	1	0.0	500	OCC SENSOR WALLSWITCH	1	5
IN	984	James Fallon-Elem	Closet Clean	1	2L4' T8 32w/EL	1	0.1	1L4' T8 28w/ELEE HI/NEW	1	0.0	500	OCC SENSOR WALLSWITCH	1	5
IN	985	James Fallon-Elem	Storage Toilet Paper	1	2L4' T8 32w/EL	1	0.1	1L4' T8 28w/ELEE HI/NEW	1	0.0	500	OCC SENSOR WALLSWITCH	1	5
IN	986	James Fallon-Elem	Classroom 30	1	3L4' T8 32w/EL	9	0.8	2L4' T8 28w/ELEE HI/RFL	9	0.6	2,520	OCC SENSOR CEILING	1	435
IN	987	James Fallon-Elem	Classroom 30	1	1L2' F40 BIAX/EL	2	0.1	1L2' F40BIAX/EL28W	2	0.1	2,520	TIMER WALLSWITCH 1GANG	1	48
IN	988	James Fallon-Elem	Classroom 30	1	1L2' F40 BIAX/EL	2	0.1	1L2' F40BIAX/EL28W	2	0.1	2,520	TIMER WALLSWITCH 1GANG	1	48
IN	989	James Fallon-Elem	Classroom 30	1	2x18W COMPACT HARDV	1	0.0	NO RETRO		0.0	2,520	OCC SENSOR WALLSWITCH	1	29
IN	990	James Fallon-Elem	Bath 30	1	60W INCANDESCENT	1	0.1	11W COMPACT SI/29708/CF11I	1	0.0	3,320	TIMER WALLSWITCH 1GANG	1	11
IN	991	James Fallon-Elem	Classroom 29	1	3L4' T8 32w/EL	9	0.8	2L4' T8 28w/ELEE HI/RFL	9	0.6	2,520	OCC SENSOR CEILING	1	435
IN	992	James Fallon-Elem	Classroom 29	1	1L2' F40 BIAX/EL	2	0.1	1L2' F40BIAX/EL28W	2	0.1	2,520	TIMER WALLSWITCH 1GANG	1	48
IN	993	James Fallon-Elem	Classroom 29	1	1L2' F40 BIAX/EL	2	0.1	1L2' F40BIAX/EL28W	2	0.1	2,520	TIMER WALLSWITCH 1GANG	1	48
IN	994	James Fallon-Elem	Classroom 29	1	2x18W COMPACT HARDV	1	0.0	NO RETRO		0.0	2,520	OCC SENSOR WALLSWITCH	1	29
IN	995	James Fallon-Elem	Bath 29	1	60W INCANDESCENT	1	0.1	11W COMPACT SI/29708/CF11I	1	0.0	3,320	TIMER WALLSWITCH 1GANG	1	11
IN	996	James Fallon-Elem	Classroom 27	1	3L4' T8 32w/EL	9	0.8	2L4' T8 28w/ELEE HI/RFL	9	0.6	2,520	OCC SENSOR CEILING	1	435
IN	997	James Fallon-Elem	Classroom 27	1	1L2' F40 BIAX/EL	2	0.1	1L2' F40BIAX/EL28W	2	0.1	2,520	TIMER WALLSWITCH 1GANG	1	48
IN	998	James Fallon-Elem	Classroom 27	1	1L2' F40 BIAX/EL	2	0.1	1L2' F40BIAX/EL28W	2	0.1	2,520	TIMER WALLSWITCH 1GANG	1	48
IN	999	James Fallon-Elem	Classroom 27	1	2x18W COMPACT HARDV	1	0.0	NO RETRO		0.0	2,520	OCC SENSOR WALLSWITCH	1	29
IN	1000	James Fallon-Elem	Bath 27	1	60W INCANDESCENT	1	0.1	11W COMPACT SI/29708/CF11I	1	0.0	3,320	TIMER WALLSWITCH 1GANG	1	11

In or Out	Line	Building Name	Location	Fl	Pre Fixture Description	Pre Qty	Pre kW	Post Fixture Description	Post Qty	Post kW	Annual Hours	*Control Description*	*Control Qty*	Control kWH Saved
IN	1001	James Fallon-Elem	Classroom 25	1	3L4' T8 32w/EL	9	0.8	2L4' T8 28w/ELEE HI/RFL	9	0.6	2,520	OCC SENSOR CEILING	1	435
IN	1002	James Fallon-Elem	Classroom 25	1	1L2' F40 BIAX/EL	2	0.1	1L2' F40BIAX/EL28W	2	0.1	2,520	TIMER WALLSWITCH 1GANG	1	48
IN	1003	James Fallon-Elem	Classroom 25	1	1L2' F40 BIAX/EL	2	0.1	1L2' F40BIAX/EL28W	2	0.1	2,520	TIMER WALLSWITCH 1GANG	1	48
IN	1004	James Fallon-Elem	Classroom 25	1	2x18W COMPACT HARDV	1	0.0	NO RETRO		0.0	2,520	OCC SENSOR WALLSWITCH	1	29
IN	1005	James Fallon-Elem	Bath 25	1	60W INCANDESCENT	1	0.1	11W COMPACT SI/29708/CF11I	1	0.0	3,320	TIMER WALLSWITCH 1GANG	1	11
IN	1006	James Fallon-Elem	Classroom 24	1	3L4' T8 32w/EL	9	0.8	2L4' T8 28w/ELEE HI/RFL	9	0.6	2,520	OCC SENSOR CEILING	1	435
IN	1007	James Fallon-Elem	Classroom 24	1	1L2' F40 BIAX/EL	2	0.1	1L2' F40BIAX/EL28W	2	0.1	2,520	TIMER WALLSWITCH 1GANG	1	48
IN	1008	James Fallon-Elem	Classroom 24	1	1L2' F40 BIAX/EL	2	0.1	1L2' F40BIAX/EL28W	2	0.1	2,520	TIMER WALLSWITCH 1GANG	1	48
IN	1009	James Fallon-Elem	Classroom 24	1	2x18W COMPACT HARDV	1	0.0	NO RETRO		0.0	2,520	OCC SENSOR WALLSWITCH	1	29
IN	1010	James Fallon-Elem	Bath 24	1	60W INCANDESCENT	1	0.1	11W COMPACT SI/29708/CF11I	1	0.0	3,320	TIMER WALLSWITCH 1GANG	1	11
IN	1011	James Fallon-Elem	Classroom 23	1	3L4' T8 32w/EL	9	0.8	2L4' T8 28w/ELEE HI/RFL	9	0.6	2,520	OCC SENSOR CEILING	1	435
IN	1012	James Fallon-Elem	Classroom 23	1	1L2' F40 BIAX/EL	2	0.1	1L2' F40BIAX/EL28W	2	0.1	2,520	TIMER WALLSWITCH 1GANG	1	48
IN	1013	James Fallon-Elem	Classroom 23	1	1L2' F40 BIAX/EL	2	0.1	1L2' F40BIAX/EL28W	2	0.1	2,520	TIMER WALLSWITCH 1GANG	1	48
IN	1014	James Fallon-Elem	Classroom 23	1	2x18W COMPACT HARDV	1	0.0	NO RETRO		0.0	2,520	OCC SENSOR WALLSWITCH	1	29
IN	1015	James Fallon-Elem	Bath 23	1	60W INCANDESCENT	1	0.1	11W COMPACT SI/29708/CF11I	1	0.0	3,320	TIMER WALLSWITCH 1GANG	1	11
IN	1016	James Fallon-Elem	Classroom 22	1	3L4' T8 32w/EL	9	0.8	2L4' T8 28w/ELEE HI/RFL	9	0.6	2,520	OCC SENSOR CEILING	1	435
IN	1017	James Fallon-Elem	Classroom 22	1	1L2' F40 BIAX/EL	2	0.1	1L2' F40BIAX/EL28W	2	0.1	2,520	TIMER WALLSWITCH 1GANG	1	48
IN	1018	James Fallon-Elem	Classroom 22	1	1L2' F40 BIAX/EL	2	0.1	1L2' F40BIAX/EL28W	2	0.1	2,520	TIMER WALLSWITCH 1GANG	1	48
IN	1019	James Fallon-Elem	Classroom 22	1	2x18W COMPACT HARDV	1	0.0	NO RETRO		0.0	2,520	OCC SENSOR WALLSWITCH	1	29
IN	1020	James Fallon-Elem	Bath 22	1	60W INCANDESCENT	1	0.1	11W COMPACT SI/29708/CF11I	1	0.0	3,320	TIMER WALLSWITCH 1GANG	1	11
IN	1021	James Fallon-Elem	Hall 22-39	1	2L4' T8 32w/EL	31	1.9	2L4' T8 28w/ELEE LO	31	1.3	3,620	NO RETRO		
IN	1022	James Fallon-Elem	Bath Staff	1	2L4' T8 32w/EL	1	0.1	1L4' T8 28w/ELEE HI/NEW	1	0.0	3,320	OCC SENSOR WALLSWITCH	1	33
IN	1023	James Fallon-Elem	Classroom 21	1	3L4' T8 32w/EL	2	0.2	2L4' T8 28w/ELEE HI/RFL	2	0.1	2,520	OCC SENSOR CEILING	3	97
IN	1024	James Fallon-Elem	Library	1	2x18W COMPACT HARDV	18	0.7	NO RETRO		0.7	2,520	NO RETRO		
IN	1025	James Fallon-Elem	Library	1	6L4' T8 32w/EL-8'	5	0.9	6L4' T8 28w/ELEE LO-8'	5	0.6	2,520	NO RETRO		
IN	1026	James Fallon-Elem	Library	1	3L4' T8 32w/EL	7	0.6	3L4' T8 28w/ELEE LO	7	0.4	2,520	NO RETRO		
IN	1027	James Fallon-Elem	Library	1	6L2' F40 BIAX/EL	9	1.8	3L2' F40BIAX/EL28W	18	1.7	2,520	NO RETRO		
IN	1028	James Fallon-Elem	Library	1	50W LO VOLT INC HALOG	6	0.4	10 WATT LED SI	6	0.1	2,520	NO RETRO		
IN	1029	James Fallon-Elem	Office 20A	1	3L4' T8 32w/EL	2	0.2	2L4' T8 28w/ELEE HI/RFL	2	0.1	2,320	NO RETRO		
IN	1030	James Fallon-Elem	Storage Electrical	1	2L4' T8 32w/EL	4	0.2	2L4' T8 28w/ELEE LO	4	0.2	500	OCC SENSOR CEILING	1	25
IN	1031	James Fallon-Elem	Bath Girls	1	2x18W COMPACT HARDV	1	0.0	NO RETRO		0.0	3,320	OCC SENSOR CEIL DT 1GAN	1	38
IN	1032	James Fallon-Elem	Bath Girls	1	4L4' T8 32w/EL-8'	2	0.2	4L4' T8 28w/ELEE LO-8'	2	0.2	3,320	INCLUDED ABOVE		165
IN	1033	James Fallon-Elem	Bath Boys	1	2x18W COMPACT HARDV	1	0.0	NO RETRO		0.0	3,320	OCC SENSOR CEIL DT 1GAN	1	38
IN	1034	James Fallon-Elem	Bath Boys	1	4L4' T8 32w/EL-8'	2	0.2	4L4' T8 28w/ELEE LO-8'	2	0.2	3,320	INCLUDED ABOVE		165
IN	1035	James Fallon-Elem	Hall By Bath	1	3L4' T8 U 1.5" /EL	2	0.2	2L2' T8 15w/ELEE HI/RFL	2	0.1	3,620	NO RETRO		
IN	1036	James Fallon-Elem	Hall By Main Office	1	2L4' T8 32w/EL	3	0.2	2L4' T8 28w/ELEE LO	3	0.1	3,620	NO RETRO		
IN	1037	James Fallon-Elem	Lobby By Main Office	1	2x18W COMPACT HARDV	15	0.6	NO RETRO		0.6	3,620	NO RETRO		
IN	1038	James Fallon-Elem	Lobby By Main Office	1	150W METAL HALIDE	10	1.9	22 WATT LED/KIT	10	0.2	3,620	NO RETRO		
IN	1039	James Fallon-Elem	Lobby By Main Office	1	22W CIRCLELINE HARDW	6	0.1	2L2' T8 15w/ELEE LO/NEW	6	0.1	3,620	NO RETRO		
IN	1040	James Fallon-Elem	Office Open Main	1	3L4' T8 U 1.5" /EL	9	0.8	2L2' T8 15w/ELEE HI/RFL	9	0.3	2,720	OCC SENSOR CEILING	2	242

In or Out	Line	Building Name	Location	Fl	Pre Fixture Description	Pre Qty	Pre kW	Post Fixture Description	Post Qty	Post kW	Annual Hours	*Control Description*	*Control Qty*	Control kWH Saved
IN	1041	James Fallon-Elem	Conference 28B	1	3L4' T8 32w/EL	2	0.2	2L4' T8 28w/ELEE HI/RFL	2	0.1	2,320	OCC SENSOR WALLSWITCH	1	89
IN	1042	James Fallon-Elem	Office Principal	1	3L4' T8 32w/EL	5	0.4	2L4' T8 28w/ELEE HI/RFL	5	0.3	2,320	OCC SENSOR CEILING	1	223
IN	1043	James Fallon-Elem	Office 28C	1	3L4' T8 32w/EL	2	0.2	2L4' T8 28w/ELEE HI/RFL	2	0.1	2,320	OCC SENSOR WALLSWITCH	1	89
IN	1044	James Fallon-Elem	Office Nurse	1	3L4' T8 U 1.5" /EL	2	0.2	2L2' T8 15w/ELEE HI/RFL	2	0.1	2,320	OCC SENSOR CEILING	1	46
IN	1045	James Fallon-Elem	Office Nurse	1	3L4' T8 32w/EL	3	0.3	2L4' T8 28w/ELEE HI/RFL	3	0.2	2,320	INCLUDED ABOVE		134
IN	1046	James Fallon-Elem	Office 26A	1	3L4' T8 32w/EL	1	0.1	2L4' T8 28w/ELEE HI/RFL	1	0.1	2,320	OCC SENSOR WALLSWITCH	1	45
IN	1047	James Fallon-Elem	Bath 26A	1	2L4' T8 32w/EL	1	0.1	1L4' T8 28w/ELEE HI/NEW	1	0.0	3,320	OCC SENSOR WALLSWITCH	1	33
IN	1048	James Fallon-Elem	Cafeteria Seating Area	1	3L4' T8 U 1.5" /EL	10	0.9	2L2' T8 15w/ELEE HI/RFL	10	0.3	2,720	NO RETRO		
IN	1049	James Fallon-Elem	Cafeteria Seating Area	1	2L2' F40 BIAX/EL	18	1.3	2L2' T8 15w/ELEE HI/RFL	18	0.6	2,720	NO RETRO		
IN	1050	James Fallon-Elem	Cafeteria Seating Area	1	2x18W COMPACT HARDV	36	1.4	NO RETRO		1.4	2,720	NO RETRO		
IN	1051	James Fallon-Elem	Kitchen Prep Area	1	2x18W COMPACT HARDV	3	0.1	NO RETRO		0.1	1,920	NO RETRO		
IN	1052	James Fallon-Elem	Kitchen Prep Area	1	3L4' T8 32w/EL	5	0.4	3L4' T8 28w/ELEE LO	5	0.3	1,920	NO RETRO		
IN	1053	James Fallon-Elem	Kitchen Grease Hood	1	100W INCANDESCENT	1	0.1	23W COMPACT SI/29712/CF23	1	0.0	1,920	NO RETRO		
IN	1054	James Fallon-Elem	Storage Dry Goods	1	3L4' T8 32w/EL	2	0.2	3L4' T8 28w/ELEE LO	2	0.1	2,120	TIMER WALLSWITCH 1GANG	1	80
IN	1055	James Fallon-Elem	Closet Clean	1	2x18W COMPACT HARDV	1	0.0	NO RETRO		0.0	500	OCC SENSOR WALLSWITCH	1	6
IN	1056	James Fallon-Elem	Lounge Staff	1	3L4' T8 32w/EL	5	0.4	2L4' T8 28w/ELEE HI/RFL	5	0.3	2,520	OCC SENSOR CEILING	1	242
IN	1057	James Fallon-Elem	Lounge Staff	1	2x18W COMPACT HARDV	1	0.0	NO RETRO		0.0	2,520	INCLUDED ABOVE		29
IN	1058	James Fallon-Elem	Storage Server	1	2x18W COMPACT HARDV	1	0.0	NO RETRO		0.0	500	OCC SENSOR WALLSWITCH	1	6
IN	1059	James Fallon-Elem	Office Custodian	1	2L4' T8 32w/EL	2	0.1	1L4' T8 28w/ELEE HI/NEW	2	0.1	2,320	OCC SENSOR WALLSWITCH	1	46
IN	1060	James Fallon-Elem	Classroom 15	1	3L4' T8 32w/EL	15	1.3	2L4' T8 28w/ELEE HI/RFL	15	1.0	2,520	OCC SENSOR CEILING	1	726
IN	1061	James Fallon-Elem	Classroom 15	1	2L4' T8 U/EL	1	0.1	2L2' T8 15w/ELEE HI/RFL	1	0.0	2,520	INCLUDED ABOVE		25
IN	1062	James Fallon-Elem	Classroom 15	1	2x18W COMPACT HARDV	1	0.0	NO RETRO		0.0	2,520	TIMER WALLSWITCH 1GANG	1	29
IN	1063	James Fallon-Elem	Hall By Baths	1	2L4' T8 U/EL	1	0.1	2L2' T8 15w/ELEE HI/RFL	1	0.0	3,620	TIMER WALLSWITCH 1GANG	1	36
IN	1064	James Fallon-Elem	Bath Unisex	1	60W INCANDESCENT	1	0.1	11W COMPACT SI/29708/CF11	1	0.0	3,320	TIMER WALLSWITCH 1GANG	1	11
IN	1065	James Fallon-Elem	Bath Unisex	1	60W INCANDESCENT	1	0.1	11W COMPACT SI/29708/CF11	1	0.0	3,320	TIMER WALLSWITCH 1GANG	1	11
IN	1066	James Fallon-Elem	Mechanical Boiler	1	2L4' T8 32w/EL	12	0.7	2L4' T8 28w/ELEE LO	12	0.5	500	TIMER WALLSWITCH 1GANG	1	76
IN	1067	James Fallon-Elem	Classroom 14	1	3L4' T8 32w/EL	15	1.3	2L4' T8 28w/ELEE HI/RFL	15	1.0	2,520	OCC SENSOR CEILING	1	726
IN	1068	James Fallon-Elem	Classroom 14	1	2x18W COMPACT HARDV	1	0.0	NO RETRO		0.0	2,520	INCLUDED ABOVE		29
IN	1069	James Fallon-Elem	Hall By Baths	1	2L4' T8 32w/EL	1	0.1	1L4' T8 28w/ELEE HI/NEW	1	0.0	3,620	TIMER WALLSWITCH 1GANG	1	36
IN	1070	James Fallon-Elem	Bath Unisex	1	60W INCANDESCENT	1	0.1	11W COMPACT SI/29708/CF11	1	0.0	3,320	TIMER WALLSWITCH 1GANG	1	11
IN	1071	James Fallon-Elem	Bath Unisex	1	60W INCANDESCENT	1	0.1	11W COMPACT SI/29708/CF11	1	0.0	3,320	TIMER WALLSWITCH 1GANG	1	11
IN	1072	James Fallon-Elem	Storage 14	1	2L4' T8 32w/EL	1	0.1	1L4' T8 28w/ELEE HI/NEW	1	0.0	500	OCC SENSOR WALLSWITCH	1	5
IN	1073	James Fallon-Elem	Classroom 14	1	3L4' T8 32w/EL	15	1.3	2L4' T8 28w/ELEE HI/RFL	15	1.0	2,520	OCC SENSOR CEILING	1	726
IN	1074	James Fallon-Elem	Classroom 14	1	2x18W COMPACT HARDV	1	0.0	NO RETRO		0.0	2,520	INCLUDED ABOVE		29
IN	1075	James Fallon-Elem	Hall 13 To Lobby	1	2L4' T8 32w/EL	9	0.5	2L4' T8 28w/ELEE LO	9	0.4	3,620	NO RETRO		
IN	1076	James Fallon-Elem	Hall 13 To Lobby	1	2L2' F40 BIAX/EL	1	0.1	2L2' F40BIAX/EL28W	1	0.1	3,620	NO RETRO		
IN	1077	James Fallon-Elem	Hall 13 To Lobby	1	2x18W COMPACT HARDV	4	0.2	NO RETRO		0.2	3,620	NO RETRO		
IN	1078	James Fallon-Elem	Bldg Mt Fixture 1	ext	100W METAL HALIDE	3	0.4	22 WATT LED/KIT	3	0.1	4,380	NO RETRO		
IN	1079	James Fallon-Elem	Bldg Mt Fixture 2	ext	100W METAL HALIDE	1	0.1	50 WATT LED/NEW	1	0.1	4,380	NO RETRO		
IN	1080	James Fallon-Elem	Bldg Mt Fixture 3	ext	32W COMPACT SCREWIN	20	0.6	NO RETRO		0.6	4,380	NO RETRO		

In or Out	Line	Building Name	Location	Fl	Pre Fixture Description	Pre Qty	Pre kW	Post Fixture Description	Post Qty	Post kW	Annual Hours	*Control Description*	*Control Qty*	Control kWH Saved
IN	1081	James Fallon-Elem	Bldg Mt Fixture 4	ext	250W HI PRESSURE SOD	14	4.1	133 WATT LED/NEW	14	1.9	4,380	NO RETRO		
IN	1082	Lafayette-Elementa	Classroom 23	1	3L4' T12 EE/EEMAG	12	1.3	2L4' T8 28w/ELEE HI/RFL	12	0.8	2,520	OCC SENSOR CEILING	1	581
IN	1083	Lafayette-Elementa	Classroom 24	1	3L4' T12 EE/EEMAG	12	1.3	2L4' T8 28w/ELEE HI/RFL	12	0.8	2,520	OCC SENSOR CEILING	1	581
IN	1084	Lafayette-Elementa	Bath Girls	1	3L4' T12 EE/EEMAG	3	0.3	3L4' T8 28w/ELEE LO	3	0.2	3,320	OCC SENSOR CEIL DT 1GAN	1	188
IN	1085	Lafayette-Elementa	Bath Boys	1	3L4' T12 EE/EEMAG	3	0.3	3L4' T8 28w/ELEE LO	3	0.2	3,320	OCC SENSOR CEIL DT 1GAN	1	188
IN	1086	Lafayette-Elementa	Classroom 20	1	4L4' T12 EE/EEMAG-8'	8	1.1	2L4' T8 28w/ELEE HI/NEW-8'	8	0.5	2,520	OCC SENSOR CORNER MT.	1	387
IN	1087	Lafayette-Elementa	Classroom 20	1	2L4' T12 EE/EEMAG	4	0.3	1L4' T8 28w/ELEE HI/NEW	4	0.1	2,520	INCLUDED ABOVE		100
IN	1088	Lafayette-Elementa	Bath 20	1	40W INCANDESCENT	1	0.0	11W COMPACT SI/29708/CF11I	1	0.0	3,320	TIMER WALLSWITCH 1GANG	1	11
IN	1089	Lafayette-Elementa	Classroom 22	1	4L4' T12 EE/EEMAG-8'	8	1.1	2L4' T8 28w/ELEE HI/NEW-8'	8	0.5	2,520	OCC SENSOR CORNER MT.	1	387
IN	1090	Lafayette-Elementa	Classroom 22	1	2L4' T12 EE/EEMAG	4	0.3	1L4' T8 28w/ELEE HI/NEW	4	0.1	2,520	INCLUDED ABOVE		100
IN	1091	Lafayette-Elementa	Bath 22	1	40W INCANDESCENT	1	0.0	11W COMPACT SI/29708/CF11I	1	0.0	3,320	TIMER WALLSWITCH 1GANG	1	11
IN	1092	Lafayette-Elementa	Classroom 21	1	4L4' T12 EE/EEMAG-8'	8	1.1	2L4' T8 28w/ELEE HI/NEW-8'	8	0.5	2,520	OCC SENSOR CORNER MT.	1	387
IN	1093	Lafayette-Elementa	Classroom 21	1	2L4' T12 EE/EEMAG	4	0.3	1L4' T8 28w/ELEE HI/NEW	4	0.1	2,520	INCLUDED ABOVE		100
IN	1094	Lafayette-Elementa	Bath 21	1	40W INCANDESCENT	1	0.0	11W COMPACT SI/29708/CF11I	1	0.0	3,320	TIMER WALLSWITCH 1GANG	1	11
IN	1095	Lafayette-Elementa	Classroom 19	1	4L4' T12 EE/EEMAG-8'	8	1.1	2L4' T8 28w/ELEE HI/NEW-8'	8	0.5	2,520	OCC SENSOR CORNER MT.	1	387
IN	1096	Lafayette-Elementa	Classroom 19	1	2L4' T12 EE/EEMAG	4	0.3	1L4' T8 28w/ELEE HI/NEW	4	0.1	2,520	INCLUDED ABOVE		100
IN	1097	Lafayette-Elementa	Bath 19	1	40W INCANDESCENT	1	0.0	11W COMPACT SI/29708/CF11I	1	0.0	3,320	TIMER WALLSWITCH 1GANG	1	11
IN	1098	Lafayette-Elementa	Gym Main	1	4L4' T12 EE/EEMAG	40	5.6	2L4' T8 28w/ELEE HI/NEW	40	2.6	2,920	OCC. SENSOR ON HI BAY FI	40	2,243
IN	1099	Lafayette-Elementa	Library	1	3L4' T12 EE/EEMAG	9	1.0	2L4' T8 28w/ELEE HI/RFL	9	0.6	2,520	OCC SENSOR CEILING	1	435
IN	1100	Lafayette-Elementa	Storage Server	1	2L4' T12 EE/EEMAG	2	0.1	2L4' T8 28w/ELEE LO	2	0.1	500	OCC SENSOR WALLSWITCH	1	13
IN	1101	Lafayette-Elementa	Office Computer Lab	1	2L4' T12 EE/EEMAG	2	0.1	2L4' T8 28w/ELEE LO	2	0.1	2,320	OCC SENSOR WALLSWITCH	1	58
IN	1102	Lafayette-Elementa	Library	1	2L4' T12 EE/EEMAG	5	0.4	2L4' T8 28w/ELEE HI/RFL	5	0.3	2,520	OCC SENSOR CEILING	1	242
IN	1103	Lafayette-Elementa	Library	1	3L4' T12 EE/EEMAG	35	3.9	2L4' T8 28w/ELEE HI/RFL	35	2.2	2,520	INCLUDED ABOVE		1,693
IN	1104	Lafayette-Elementa	Office Library	1	2L4' T12 EE/EEMAG	2	0.1	2L4' T8 28w/ELEE LO	2	0.1	2,320	OCC SENSOR WALLSWITCH	1	58
IN	1105	Lafayette-Elementa	Storage Equipment	1	2L4' T12 EE/EEMAG	1	0.1	1L4' T8 28w/ELEE HI/NEW	1	0.0	500	OCC SENSOR WALLSWITCH	1	5
IN	1106	Lafayette-Elementa	Bath Staff	1	2L4' T8 U/EL	1	0.1	2L2' T8 15w/ELEE HI/RFL	1	0.0	3,320	OCC SENSOR WALLSWITCH	1	33
IN	1107	Lafayette-Elementa	Bath Staff	1	1L2' T8 17w/EL	1	0.0	2L2' T8 15w/ELEE LO/NEW	1	0.0	3,320	INCLUDED ABOVE		24
IN	1108	Lafayette-Elementa	Hall 24 To Gym	1	3L4' T8 32w/EL	13	1.1	3L4' T8 28w/ELEE LO	13	0.8	3,620	NO RETRO		
IN	1109	Lafayette-Elementa	Hall 24 To Gym	1	2L4' T12 EE/EEMAG	1	0.1	1L4' T8 28w/ELEE HI/NEW	1	0.0	3,620	NO RETRO		
IN	1110	Lafayette-Elementa	Hall 17 To 18	1	3L4' T12 EE/EEMAG	6	0.7	3L4' T8 28w/ELEE LO	6	0.4	3,620	NO RETRO		
IN	1111	Lafayette-Elementa	Classroom 18B	1	3L4' T12 EE/EEMAG	6	0.7	2L4' T8 28w/ELEE HI/RFL	6	0.4	2,520	OCC SENSOR CEILING	1	290
IN	1112	Lafayette-Elementa	Classroom 18A	1	3L4' T12 EE/EEMAG	6	0.7	2L4' T8 28w/ELEE HI/RFL	6	0.4	2,520	OCC SENSOR CEILING	1	290
IN	1113	Lafayette-Elementa	Classroom 17B	1	3L4' T12 EE/EEMAG	6	0.7	2L4' T8 28w/ELEE HI/RFL	6	0.4	2,520	OCC SENSOR CEILING	1	290
IN	1114	Lafayette-Elementa	Classroom 17A	1	3L4' T12 EE/EEMAG	6	0.7	2L4' T8 28w/ELEE HI/RFL	6	0.4	2,520	OCC SENSOR CEILING	1	290
IN	1115	Lafayette-Elementa	Hall Gym To Main Office	1	3L4' T8 32w/EL	3	0.3	3L4' T8 28w/ELEE LO	3	0.2	3,620	DAYLIGHT HARVESTING SYS	3	342
IN	1116	Lafayette-Elementa	Hall Gym To Main Office	1	3L4' T8 32w/EL	3	0.3	3L4' T8 28w/ELEE LO	3	0.2	3,620	NO RETRO		
IN	1117	Lafayette-Elementa	Mechanical Air Handler	1	60W INCANDESCENT	1	0.1	13 WATT LED/NEW	1	0.0	500	OCC SENSOR WALLSWITCH	1	2
IN	1118	Lafayette-Elementa	Office Nurse	1	3L4' T8 32w/EL	1	0.1	3L4' T8 28w/ELEE LO	1	0.1	2,320	OCC SENSOR CEILING	1	44
IN	1119	Lafayette-Elementa	Office Nurse	1	32W CIRCLELINE HARDW	1	0.0	2L2' T8 15w/ELEE LO/NEW	1	0.0	2,320	INCLUDED ABOVE		17
IN	1120	Lafayette-Elementa	Bath Nurse	1	2x60W INCANDESCENTS	1	0.1	2L2' T8 15w/ELEE LO/NEW	1	0.0	3,320	NO RETRO		

In or Out	Line	Building Name	Location	Fl	Pre Fixture Description	Pre Qty	Pre kW	Post Fixture Description	Post Qty	Post kW	Annual Hours	*Control Description*	*Control Qty*	Control kWH Saved
IN	1121	Lafayette-Elementa	Office Open Main	1	3L4' T8 32w/EL	4	0.4	3L4' T8 28w/ELEE LO	4	0.3	2,720	OCC SENSOR CEILING	1	206
IN	1122	Lafayette-Elementa	Closet Supplies	1	60W INCANDESCENT	1	0.1	23W COMPACT SI/29712/CF23I	1	0.0	500	NO RETRO		
IN	1123	Lafayette-Elementa	Office Principal	1	4L4' T8 32w/EL-8'	2	0.2	2L4' T8 28w/ELEE HI/NEW-8'	2	0.1	2,320	OCC SENSOR CEILING	1	89
IN	1124	Lafayette-Elementa	Office Social Worker	1	4L4' T12 EE/EEMAG-8'	2	0.3	2L4' T8 28w/ELEE HI/NEW-8'	2	0.1	2,320	NO RETRO		
IN	1125	Lafayette-Elementa	Classroom 15	1	4L4' T12 EE/EEMAG-8'	11	1.5	2L4' T8 28w/ELEE HI/NEW-8'	11	0.7	2,520	OCC SENSOR CORNER MT.	1	532
IN	1126	Lafayette-Elementa	Closet 15	1	100W INCANDESCENT	1	0.1	23W COMPACT SI/29712/CF23I	1	0.0	500	OCC SENSOR WALLSWITCH	1	3
IN	1127	Lafayette-Elementa	Bath 14/15	1	2L4' T12 EE/EEMAG	2	0.1	1L4' T8 28w/ELEE HI/NEW	2	0.1	3,320	NO RETRO		
IN	1128	Lafayette-Elementa	Classroom 14	1	4L4' T12 EE/EEMAG-8'	11	1.5	2L4' T8 28w/ELEE HI/NEW-8'	11	0.7	2,520	OCC SENSOR CORNER MT.	1	532
IN	1129	Lafayette-Elementa	Hall 14 To 10	1	3L4' T8 32w/EL	8	0.7	3L4' T8 28w/ELEE LO	8	0.5	3,620	NO RETRO		
IN	1130	Lafayette-Elementa	Classroom 13	1	4L4' T12 EE/EEMAG-8'	3	0.4	2L4' T8 28w/ELEE HI/NEW-8'	3	0.2	2,520	OCC SENSOR CEILING	1	145
IN	1131	Lafayette-Elementa	Classroom 13	1	4L4' T12 EE/EEMAG-8'	6	0.8	2L4' T8 28w/ELEE HI/NEW-8'	6	0.4	2,520	INCLUDED ABOVE		290
IN	1132	Lafayette-Elementa	Classroom 12	1	4L4' T12 EE/EEMAG-8'	3	0.4	2L4' T8 28w/ELEE HI/NEW-8'	3	0.2	2,520	OCC SENSOR CEILING	1	145
IN	1133	Lafayette-Elementa	Classroom 12	1	4L4' T12 EE/EEMAG-8'	6	0.8	2L4' T8 28w/ELEE HI/NEW-8'	6	0.4	2,520	INCLUDED ABOVE		290
IN	1134	Lafayette-Elementa	Classroom 11	1	4L4' T12 EE/EEMAG-8'	3	0.4	2L4' T8 28w/ELEE HI/NEW-8'	3	0.2	2,520	OCC SENSOR CEILING	1	145
IN	1135	Lafayette-Elementa	Classroom 11	1	4L4' T12 EE/EEMAG-8'	6	0.8	2L4' T8 28w/ELEE HI/NEW-8'	6	0.4	2,520	INCLUDED ABOVE		290
IN	1136	Lafayette-Elementa	Classroom 10	1	4L4' T12 EE/EEMAG-8'	3	0.4	2L4' T8 28w/ELEE HI/NEW-8'	3	0.2	2,520	OCC SENSOR CEILING	1	145
IN	1137	Lafayette-Elementa	Classroom 10	1	4L4' T12 EE/EEMAG-8'	6	0.8	2L4' T8 28w/ELEE HI/NEW-8'	6	0.4	2,520	INCLUDED ABOVE		290
IN	1138	Lafayette-Elementa	Classroom 9	1	4L4' T12 EE/EEMAG-8'	3	0.4	2L4' T8 28w/ELEE HI/NEW-8'	3	0.2	2,520	OCC SENSOR CEILING	1	145
IN	1139	Lafayette-Elementa	Classroom 9	1	4L4' T12 EE/EEMAG-8'	6	0.8	2L4' T8 28w/ELEE HI/NEW-8'	6	0.4	2,520	INCLUDED ABOVE		290
IN	1140	Lafayette-Elementa	Closet Clean	1	18W COMPACT HARDWIF	1	0.0	NO RETRO		0.0	500	OCC SENSOR CEILING	1	3
IN	1141	Lafayette-Elementa	Storage Paper	1	2L4' T12 EE/EEMAG	2	0.1	1L4' T8 28w/ELEE HI/NEW	2	0.1	2,120	OCC SENSOR WALLSWITCH	1	42
IN	1142	Lafayette-Elementa	Kitchen	1	2L4' T8 32w/EL	1	0.1	2L4' T8 28w/ELEE LO/NEW	1	0.0	1,920	OCC SENSOR WALLSWITCH	1	24
IN	1143	Lafayette-Elementa	Office Copy	1	2L4' T8 32w/EL	1	0.1	1L4' T8 28w/ELEE HI/NEW	1	0.0	2,320	OCC SENSOR WALLSWITCH	1	23
IN	1144	Lafayette-Elementa	Lounge Staff	1	2L4' T12 EE/EEMAG	2	0.1	1L4' T8 28w/ELEE HI/NEW	2	0.1	2,520	OCC SENSOR WALLSWITCH	1	50
IN	1145	Lafayette-Elementa	Lounge Staff	1	13W COMPACT HARDWIF	1	0.0	NO RETRO		0.0	2,520	TIMER WALLSWITCH 1GANG	1	11
IN	1146	Lafayette-Elementa	Bath Staff	1	2L4' T12 EE/EEMAG	1	0.1	1L4' T8 28w/ELEE HI/NEW	1	0.0	3,320	OCC SENSOR WALLSWITCH	1	33
IN	1147	Lafayette-Elementa	Bath Girls	1	2L4' T8 32w/EL	1	0.1	1L4' T8 28w/ELEE HI/NEW	1	0.0	3,320	OCC SENSOR WALLSWITCH	1	33
IN	1148	Lafayette-Elementa	Bath Girls	1	4L4' T8 32w/EL-8'	1	0.1	2L4' T8 28w/ELEE HI/NEW-8'	1	0.1	3,320	INCLUDED ABOVE		64
IN	1149	Lafayette-Elementa	Bath Staff	1	2L4' T8 32w/EL	1	0.1	1L4' T8 28w/ELEE HI/NEW	1	0.0	3,320	OCC SENSOR WALLSWITCH	1	33
IN	1150	Lafayette-Elementa	Bath Boys	1	3L4' T8 32w/EL	1	0.1	3L4' T8 28w/ELEE LO	1	0.1	3,320	OCC SENSOR CEIL DT 1GAN	1	63
IN	1151	Lafayette-Elementa	Bath Boys	1	2L4' T8 U/EL	1	0.1	2L2' T8 15w/ELEE HI/RFL	1	0.0	3,320	INCLUDED ABOVE		33
IN	1152	Lafayette-Elementa	Storage By Boiler	1	2x13W COMPACT HARDV	2	0.1	NO RETRO		0.1	2,120	TIMER WALLSWITCH 1GANG	1	38
IN	1153	Lafayette-Elementa	Mechanical Boiler	1	2L4' T12 EE/EEMAG	5	0.4	1L4' T8 28w/ELEE HI/NEW	5	0.2	500	TIMER WALLSWITCH 1GANG	1	25
IN	1154	Lafayette-Elementa	Mechanical Boiler	1	60W INCANDESCENT	2	0.1	23W COMPACT SI/29712/CF23I	2	0.0	500	NO RETRO		
IN	1155	Lafayette-Elementa	Kitchen Prep Area	1	2L4' T12 EE/EEMAG	10	0.7	2L4' T8 28w/ELEE LO/NEW	10	0.4	1,920	TIMER WALLSWITCH 1GANG	1	242
IN	1156	Lafayette-Elementa	Kitchen Grease Hood	1	100W INCANDESCENT	2	0.2	23W COMPACT SI/29712/CF23I	2	0.0	1,920	NO RETRO		
IN	1157	Lafayette-Elementa	Hall 15 To 9	1	3L4' T8 32w/EL	11	1.0	3L4' T8 28w/ELEE LO	11	0.7	3,620	NO RETRO		
IN	1158	Lafayette-Elementa	Cafeteria Seating Area	1	4L4' T12 EE/EEMAG-8'	14	2.0	2L4' T8 28w/ELEE HI/NEW-8'	14	0.9	2,720	OCC SENSOR CEILING	1	731
IN	1159	Lafayette-Elementa	Cafeteria Seating Area	1	4L4' T12 EE/EEMAG-8'	7	1.0	2L4' T8 28w/ELEE HI/NEW-8'	7	0.4	2,720	INCLUDED ABOVE		366
IN	1160	Lafayette-Elementa	Hall 9 To Main Lobby	1	3L4' T8 32w/EL	9	0.8	3L4' T8 28w/ELEE LO	9	0.6	3,620	NO RETRO		

In or Out	Line	Building Name	Location	Fl	Pre Fixture Description	Pre Qty	Pre kW	Post Fixture Description	Post Qty	Post kW	Annual Hours	*Control Description*	*Control Qty*	Control kWH Saved
IN	1161	Lafayette-Elementa	Hall 9 To Main Lobby	1	3L2' T8 17w/EL	1	0.0	3L2' T8 15w/ELEE LO	1	0.0	3,620	NO RETRO		
IN	1162	Lafayette-Elementa	Bath Girls	1	2L4' T12 EE/EEMAG	2	0.1	1L4' T8 28w/ELEE HI/NEW	2	0.1	3,320	NO RETRO		
IN	1163	Lafayette-Elementa	Bath Boys	1	2L4' T12 EE/EEMAG	2	0.1	1L4' T8 28w/ELEE HI/NEW	2	0.1	3,320	NO RETRO		
IN	1164	Lafayette-Elementa	Classroom 8	1	4L4' T12 EE/EEMAG-8'	3	0.4	2L4' T8 28w/ELEE HI/NEW-8'	3	0.2	2,520	OCC SENSOR CEILING	1	145
IN	1165	Lafayette-Elementa	Classroom 8	1	4L4' T12 EE/EEMAG-8'	6	0.8	2L4' T8 28w/ELEE HI/NEW-8'	6	0.4	2,520	INCLUDED ABOVE		290
IN	1166	Lafayette-Elementa	Classroom 7	1	4L4' T12 EE/EEMAG-8'	3	0.4	2L4' T8 28w/ELEE HI/NEW-8'	3	0.2	2,520	OCC SENSOR CEILING	1	145
IN	1167	Lafayette-Elementa	Classroom 7	1	4L4' T12 EE/EEMAG-8'	6	0.8	2L4' T8 28w/ELEE HI/NEW-8'	6	0.4	2,520	INCLUDED ABOVE		290
IN	1168	Lafayette-Elementa	Classroom 6	1	4L4' T12 EE/EEMAG-8'	3	0.4	2L4' T8 28w/ELEE HI/NEW-8'	3	0.2	2,520	OCC SENSOR CEILING	1	145
IN	1169	Lafayette-Elementa	Classroom 6	1	4L4' T12 EE/EEMAG-8'	6	0.8	2L4' T8 28w/ELEE HI/NEW-8'	6	0.4	2,520	INCLUDED ABOVE		290
IN	1170	Lafayette-Elementa	Classroom 5	1	4L4' T12 EE/EEMAG-8'	3	0.4	2L4' T8 28w/ELEE HI/NEW-8'	3	0.2	2,520	OCC SENSOR CEILING	1	145
IN	1171	Lafayette-Elementa	Classroom 5	1	4L4' T12 EE/EEMAG-8'	6	0.8	2L4' T8 28w/ELEE HI/NEW-8'	6	0.4	2,520	INCLUDED ABOVE		290
IN	1172	Lafayette-Elementa	Classroom 4	1	4L4' T12 EE/EEMAG-8'	3	0.4	2L4' T8 28w/ELEE HI/NEW-8'	3	0.2	2,520	OCC SENSOR CEILING	1	145
IN	1173	Lafayette-Elementa	Classroom 4	1	4L4' T12 EE/EEMAG-8'	6	0.8	2L4' T8 28w/ELEE HI/NEW-8'	6	0.4	2,520	INCLUDED ABOVE		290
IN	1174	Lafayette-Elementa	Classroom 3	1	4L4' T12 EE/EEMAG-8'	3	0.4	2L4' T8 28w/ELEE HI/NEW-8'	3	0.2	2,520	OCC SENSOR CEILING	1	145
IN	1175	Lafayette-Elementa	Classroom 3	1	4L4' T12 EE/EEMAG-8'	6	0.8	2L4' T8 28w/ELEE HI/NEW-8'	6	0.4	2,520	INCLUDED ABOVE		290
IN	1176	Lafayette-Elementa	Classroom 2	1	4L4' T12 EE/EEMAG-8'	3	0.4	2L4' T8 28w/ELEE HI/NEW-8'	3	0.2	2,520	OCC SENSOR CEILING	1	145
IN	1177	Lafayette-Elementa	Classroom 2	1	4L4' T12 EE/EEMAG-8'	6	0.8	2L4' T8 28w/ELEE HI/NEW-8'	6	0.4	2,520	INCLUDED ABOVE		290
IN	1178	Lafayette-Elementa	Classroom 1	1	4L4' T12 EE/EEMAG-8'	3	0.4	2L4' T8 28w/ELEE HI/NEW-8'	3	0.2	2,520	OCC SENSOR CEILING	1	145
IN	1179	Lafayette-Elementa	Classroom 1	1	4L4' T12 EE/EEMAG-8'	6	0.8	2L4' T8 28w/ELEE HI/NEW-8'	6	0.4	2,520	INCLUDED ABOVE		290
IN	1180	Lafayette-Elementa	Hall 2 To 7	1	3L4' T8 32w/EL	15	1.3	3L4' T8 28w/ELEE LO	15	0.9	3,620	NO RETRO		
IN	1181	Lafayette-Elementa	Bldg Mt Fixture 1	ext	50W HI PRESSURE SODI	7	0.5	26 WATT LED/NEW	7	0.2	4,380	NO RETRO		
IN	1182	Lafayette-Elementa	Bldg Mt Fixture 2	ext	150W HI PRESSURE SOD	1	0.2	70 WATT LED/NEW	1	0.1	4,380	NO RETRO		
IN	1183	Lafayette-Elementa	Bldg Mt Fixture 3	ext	72W COMPACT SCREWIN	1	0.1	26 WATT LED/NEW	1	0.0	4,380	NO RETRO		
IN	1184	Lafayette-Elementa	Bldg Mt Fixture 4	ext	3 WATT LED	1	0.0	NO RETRO		0.0	4,380	NO RETRO		
IN	1185	Lafayette-Elementa	Bldg Mt Fixture 5	ext	50W HI PRESSURE SODI	1	0.1	26 WATT LED/NEW	1	0.0	4,380	NO RETRO		
IN	1186	Lafayette-Elementa	Bldg Mt Fixture 6	ext	3 WATT LED	1	0.0	NO RETRO		0.0	4,380	NO RETRO		
IN	1187	Lafayette-Elementa	Bldg Mt Fixture 7	ext	250W HI PRESSURE SOD	7	2.1	133 WATT LED/NEW	7	0.9	4,380	NO RETRO		
IN	1188	Lafayette-Elementa	Parking Lot Fixture 8	ext	250W METAL HALIDE	2	0.6	133 WATT LED/NEW	2	0.3	4,380	NO RETRO		
IN	1189	John F. Kennedy-E	Hall 2Nd Floor	2	3L4' T12 EE/EEMAG	3	0.3	3L4' T8 28w/ELEE LO	3	0.2	3,620	NO RETRO		
IN	1190	John F. Kennedy-E	Hall 2Nd Floor	2	2L4' T12 EE/EEMAG	15	1.1	1L4' T8 28w/ELEE HI/NEW	15	0.5	3,620	NO RETRO		
IN	1191	John F. Kennedy-E	Bath Men	2	2L4' T8 U/EL	6	0.4	2L2' T8 15w/ELEE HI/RFL	6	0.2	3,320	OCC SENSOR CEIL DT 1GAN	1	197
IN	1192	John F. Kennedy-E	Bath Staff	2	2L4' T8 U/EL	2	0.1	2L2' T8 15w/ELEE HI/RFL	2	0.1	3,320	OCC SENSOR WALLSWITCH	1	66
IN	1193	John F. Kennedy-E	Closet Clean	2	3x13W COMPACT HARDV	1	0.0	NO RETRO		0.0	500	OCC SENSOR WALLSWITCH	1	7
IN	1194	John F. Kennedy-E	Bath Girls	2	2L4' T8 U/EL	6	0.4	2L2' T8 15w/ELEE HI/RFL	6	0.2	3,320	OCC SENSOR CEIL DT 1GAN	1	197
IN	1195	John F. Kennedy-E	Bath Staff	2	2L4' T8 U/EL	2	0.1	2L2' T8 15w/ELEE HI/RFL	2	0.1	3,320	OCC SENSOR WALLSWITCH	1	66
IN	1196	John F. Kennedy-E	Classroom 12	2	4L4' T12 EE/EEMAG-8'	3	0.4	2L4' T8 28w/ELEE HI/NEW-8'	3	0.2	2,520	INCLUDED ABOVE		145
IN	1197	John F. Kennedy-E	Classroom 12	2	4L4' T12 EE/EEMAG-8'	6	0.8	2L4' T8 28w/ELEE HI/NEW-8'	6	0.4	2,520	OCC SENSOR CORNER MT.	1	290
IN	1198	John F. Kennedy-E	Classroom 13	2	4L4' T12 EE/EEMAG-8'	3	0.4	2L4' T8 28w/ELEE HI/NEW-8'	3	0.2	2,520	INCLUDED ABOVE		145
IN	1199	John F. Kennedy-E	Classroom 13	2	4L4' T12 EE/EEMAG-8'	6	0.8	2L4' T8 28w/ELEE HI/NEW-8'	6	0.4	2,520	OCC SENSOR CORNER MT.	1	290
IN	1200	John F. Kennedy-E	Classroom 14	2	4L4' T12 EE/EEMAG-8'	3	0.4	2L4' T8 28w/ELEE HI/NEW-8'	3	0.2	2,520	INCLUDED ABOVE		145

In or Out	Line	Building Name	Location	Fl	Pre Fixture Description	Pre Qty	Pre kW	Post Fixture Description	Post Qty	Post kW	Annual Hours	*Control Description*	*Control Qty*	Control kWH Saved
IN	1201	John F. Kennedy-E	Classroom 14	2	4L4' T12 EE/EEMAG-8'	6	0.8	2L4' T8 28w/ELEE HI/NEW-8'	6	0.4	2,520	OCC SENSOR CORNER MT.	1	290
IN	1202	John F. Kennedy-E	Classroom 15	2	4L4' T12 EE/EEMAG-8'	3	0.4	2L4' T8 28w/ELEE HI/NEW-8'	3	0.2	2,520	INCLUDED ABOVE		145
IN	1203	John F. Kennedy-E	Classroom 15	2	4L4' T12 EE/EEMAG-8'	6	0.8	2L4' T8 28w/ELEE HI/NEW-8'	6	0.4	2,520	OCC SENSOR CORNER MT.	1	290
IN	1204	John F. Kennedy-E	Classroom 16	2	4L4' T12 EE/EEMAG-8'	3	0.4	2L4' T8 28w/ELEE HI/NEW-8'	3	0.2	2,520	INCLUDED ABOVE		145
IN	1205	John F. Kennedy-E	Classroom 16	2	4L4' T12 EE/EEMAG-8'	6	0.8	2L4' T8 28w/ELEE HI/NEW-8'	6	0.4	2,520	OCC SENSOR CORNER MT.	1	290
IN	1206	John F. Kennedy-E	Classroom 17	2	4L4' T12 EE/EEMAG-8'	3	0.4	2L4' T8 28w/ELEE HI/NEW-8'	3	0.2	2,520	INCLUDED ABOVE		145
IN	1207	John F. Kennedy-E	Classroom 17	2	4L4' T12 EE/EEMAG-8'	6	0.8	2L4' T8 28w/ELEE HI/NEW-8'	6	0.4	2,520	OCC SENSOR CORNER MT.	1	290
IN	1208	John F. Kennedy-E	Classroom 18	2	4L4' T12 EE/EEMAG-8'	3	0.4	2L4' T8 28w/ELEE HI/NEW-8'	3	0.2	2,520	INCLUDED ABOVE		145
IN	1209	John F. Kennedy-E	Classroom 18	2	4L4' T12 EE/EEMAG-8'	6	0.8	2L4' T8 28w/ELEE HI/NEW-8'	6	0.4	2,520	OCC SENSOR CORNER MT.	1	290
IN	1210	John F. Kennedy-E	Classroom 19	2	4L4' T12 EE/EEMAG-8'	3	0.4	2L4' T8 28w/ELEE HI/NEW-8'	3	0.2	2,520	INCLUDED ABOVE		145
IN	1211	John F. Kennedy-E	Classroom 19	2	4L4' T12 EE/EEMAG-8'	6	0.8	2L4' T8 28w/ELEE HI/NEW-8'	6	0.4	2,520	OCC SENSOR CORNER MT.	1	290
IN	1212	John F. Kennedy-E	Classroom 20	2	4L4' T12 EE/EEMAG-8'	3	0.4	2L4' T8 28w/ELEE HI/NEW-8'	3	0.2	2,520	INCLUDED ABOVE		145
IN	1213	John F. Kennedy-E	Classroom 20	2	4L4' T12 EE/EEMAG-8'	6	0.8	2L4' T8 28w/ELEE HI/NEW-8'	6	0.4	2,520	OCC SENSOR CORNER MT.	1	290
IN	1214	John F. Kennedy-E	Classroom 21	2	4L4' T12 EE/EEMAG-8'	3	0.4	2L4' T8 28w/ELEE HI/NEW-8'	3	0.2	2,520	INCLUDED ABOVE		145
IN	1215	John F. Kennedy-E	Classroom 21	2	4L4' T12 EE/EEMAG-8'	6	0.8	2L4' T8 28w/ELEE HI/NEW-8'	6	0.4	2,520	OCC SENSOR CORNER MT.	1	290
IN	1216	John F. Kennedy-E	Classroom 22	2	4L4' T12 EE/EEMAG-8'	3	0.4	2L4' T8 28w/ELEE HI/NEW-8'	3	0.2	2,520	INCLUDED ABOVE		145
IN	1217	John F. Kennedy-E	Classroom 22	2	4L4' T12 EE/EEMAG-8'	6	0.8	2L4' T8 28w/ELEE HI/NEW-8'	6	0.4	2,520	OCC SENSOR CORNER MT.	1	290
IN	1218	John F. Kennedy-E	Classroom 23	2	4L4' T12 EE/EEMAG-8'	3	0.4	2L4' T8 28w/ELEE HI/NEW-8'	3	0.2	2,520	INCLUDED ABOVE		145
IN	1219	John F. Kennedy-E	Classroom 23	2	4L4' T12 EE/EEMAG-8'	6	0.8	2L4' T8 28w/ELEE HI/NEW-8'	6	0.4	2,520	OCC SENSOR CORNER MT.	1	290
IN	1220	John F. Kennedy-E	Stair 2	s	3x13W COMPACT HARDV	3	0.1	NO RETRO		0.1	3,620	NO RETRO		
IN	1221	John F. Kennedy-E	Stair 2	s	2L4' T12 EE/EEMAG	2	0.1	1L4' T8 28w/ELEE HI/NEW	2	0.1	3,620	NO RETRO		
IN	1222	John F. Kennedy-E	Stair 1	s	3x13W COMPACT HARDV	3	0.1	NO RETRO		0.1	3,620	NO RETRO		
IN	1223	John F. Kennedy-E	Stair 1	s	2L4' T12 EE/EEMAG	2	0.1	1L4' T8 28w/ELEE HI/NEW	2	0.1	3,620	NO RETRO		
IN	1224	John F. Kennedy-E	Classroom 102B	1	3L4' T12 EE/EEMAG	6	0.7	2L4' T8 28w/ELEE HI/RFL	6	0.4	2,520	OCC SENSOR CEILING	1	290
IN	1225	John F. Kennedy-E	Classroom 102A	1	3L4' T12 EE/EEMAG	6	0.7	2L4' T8 28w/ELEE HI/RFL	6	0.4	2,520	OCC SENSOR CEILING	1	290
IN	1226	John F. Kennedy-E	Classroom 101B	1	3L4' T12 EE/EEMAG	6	0.7	2L4' T8 28w/ELEE HI/RFL	6	0.4	2,520	OCC SENSOR CEILING	1	290
IN	1227	John F. Kennedy-E	Classroom 101A	1	3L4' T12 EE/EEMAG	6	0.7	2L4' T8 28w/ELEE HI/RFL	6	0.4	2,520	OCC SENSOR CEILING	1	290
IN	1228	John F. Kennedy-E	Library	1	2x18W COMPACT HARDV	18	0.7	NO RETRO		0.7	2,520	NO RETRO		
IN	1229	John F. Kennedy-E	Library	1	2L4' T12 U EE/EEMAG	24	1.7	2L2' T8 15w/ELEE HI/RFL	24	0.8	2,520	NO RETRO		
IN	1230	John F. Kennedy-E	Library	1	23W COMPACT HARDWI	17	0.4	NO RETRO		0.4	2,520	NO RETRO		
IN	1231	John F. Kennedy-E	Storage Server	1	3L4' T12 EE/EEMAG	1	0.1	3L4' T8 28w/ELEE LO	1	0.1	500	OCC SENSOR WALLSWITCH	1	9
IN	1232	John F. Kennedy-E	Office Library	1	3L4' T12 EE/EEMAG	3	0.3	3L4' T8 28w/ELEE LO	3	0.2	2,320	OCC SENSOR CEILING	1	132
IN	1233	John F. Kennedy-E	Classroom 100	1	3L4' T12 EE/EEMAG	15	1.7	2L4' T8 28w/ELEE HI/RFL	15	1.0	2,520	OCC SENSOR CEILING	1	726
IN	1234	John F. Kennedy-E	Hall C102B To 100	1	3L4' T12 EE/EEMAG	11	1.2	3L4' T8 28w/ELEE LO	11	0.7	3,620	NO RETRO		
IN	1235	John F. Kennedy-E	Classroom 10	1	4L4' T12 EE/EEMAG-8'	3	0.4	2L4' T8 28w/ELEE HI/NEW-8'	3	0.2	2,520	INCLUDED ABOVE		145
IN	1236	John F. Kennedy-E	Classroom 10	1	4L4' T12 EE/EEMAG-8'	6	0.8	2L4' T8 28w/ELEE HI/NEW-8'	6	0.4	2,520	OCC SENSOR CEILING	1	290
IN	1237	John F. Kennedy-E	Bath 10	1	2x40W INCANDESCENTS	1	0.1	2L2' T8 15w/ELEE LO/NEW	1	0.0	3,320	TIMER WALLSWITCH 1GANG	1	24
IN	1238	John F. Kennedy-E	Classroom 11	1	4L4' T12 EE/EEMAG-8'	3	0.4	2L4' T8 28w/ELEE HI/NEW-8'	3	0.2	2,520	INCLUDED ABOVE		145
IN	1239	John F. Kennedy-E	Classroom 11	1	4L4' T12 EE/EEMAG-8'	6	0.8	2L4' T8 28w/ELEE HI/NEW-8'	6	0.4	2,520	OCC SENSOR CEILING	1	290
IN	1240	John F. Kennedy-E	Bath 11	1	2x40W INCANDESCENTS	1	0.1	2L2' T8 15w/ELEE LO/NEW	1	0.0	3,320	TIMER WALLSWITCH 1GANG	1	24

In or Out	Line	Building Name	Location	Fl	Pre Fixture Description	Pre Qty	Pre kW	Post Fixture Description	Post Qty	Post kW	Annual Hours	*Control Description*	*Control Qty*	Control kWH Saved
IN	1241	John F. Kennedy-E	Classroom 9	1	4L4' T12 EE/EEMAG-8'	3	0.4	2L4' T8 28w/ELEE HI/NEW-8'	3	0.2	2,520	INCLUDED ABOVE		145
IN	1242	John F. Kennedy-E	Classroom 9	1	4L4' T12 EE/EEMAG-8'	6	0.8	2L4' T8 28w/ELEE HI/NEW-8'	6	0.4	2,520	OCC SENSOR CEILING	1	290
IN	1243	John F. Kennedy-E	Bath 9	1	2x40W INCANDESCENTS	1	0.1	2L2' T8 15w/ELEE LO/NEW	1	0.0	3,320	TIMER WALLSWITCH 1GANG	1	24
IN	1244	John F. Kennedy-E	Classroom 8	1	4L4' T12 EE/EEMAG-8'	3	0.4	2L4' T8 28w/ELEE HI/NEW-8'	3	0.2	2,520	INCLUDED ABOVE		145
IN	1245	John F. Kennedy-E	Classroom 8	1	4L4' T12 EE/EEMAG-8'	6	0.8	2L4' T8 28w/ELEE HI/NEW-8'	6	0.4	2,520	OCC SENSOR CEILING	1	290
IN	1246	John F. Kennedy-E	Bath 8	1	2x40W INCANDESCENTS	1	0.1	2L2' T8 15w/ELEE LO/NEW	1	0.0	3,320	TIMER WALLSWITCH 1GANG	1	24
IN	1247	John F. Kennedy-E	Bath Staff	1	3x13W COMPACT HARDV	1	0.0	NO RETRO		0.0	3,320	OCC SENSOR WALLSWITCH	1	45
IN	1248	John F. Kennedy-E	Classroom 6	1	4L4' T12 EE/EEMAG-8'	3	0.4	2L4' T8 28w/ELEE HI/NEW-8'	3	0.2	2,520	INCLUDED ABOVE		145
IN	1249	John F. Kennedy-E	Classroom 6	1	2L4' T12 EE/EEMAG	1	0.1	1L4' T8 28w/ELEE HI/NEW	1	0.0	2,520	INCLUDED ABOVE		25
IN	1250	John F. Kennedy-E	Classroom 6	1	4L4' T12 EE/EEMAG-8'	5	0.7	2L4' T8 28w/ELEE HI/NEW-8'	5	0.3	2,520	OCC SENSOR CEILING	1	242
IN	1251	John F. Kennedy-E	Classroom 6	1	2L4' T12 EE/EEMAG	2	0.1	1L4' T8 28w/ELEE HI/NEW	2	0.1	2,520	INCLUDED ABOVE		50
IN	1252	John F. Kennedy-E	Closet 6	1	4L2' T12 STD/STD	1	0.1	2L2' T8 15w/ELEE LO/NEW	1	0.0	500	OCC SENSOR WALLSWITCH	1	4
IN	1253	John F. Kennedy-E	Bath 6	1	2x40W INCANDESCENTS	1	0.1	2L2' T8 15w/ELEE LO/NEW	1	0.0	3,320	TIMER WALLSWITCH 1GANG	1	24
IN	1254	John F. Kennedy-E	Classroom 7	1	4L4' T12 EE/EEMAG-8'	3	0.4	2L4' T8 28w/ELEE HI/NEW-8'	3	0.2	2,520	INCLUDED ABOVE		145
IN	1255	John F. Kennedy-E	Classroom 7	1	4L4' T12 EE/EEMAG-8'	6	0.8	2L4' T8 28w/ELEE HI/NEW-8'	6	0.4	2,520	OCC SENSOR CEILING	1	290
IN	1256	John F. Kennedy-E	Bath 7	1	2x40W INCANDESCENTS	1	0.1	2L2' T8 15w/ELEE LO/NEW	1	0.0	3,320	TIMER WALLSWITCH 1GANG	1	24
IN	1257	John F. Kennedy-E	Classroom 5	1	4L4' T12 EE/EEMAG-8'	3	0.4	2L4' T8 28w/ELEE HI/NEW-8'	3	0.2	2,520	INCLUDED ABOVE		145
IN	1258	John F. Kennedy-E	Classroom 5	1	4L4' T12 EE/EEMAG-8'	6	0.8	2L4' T8 28w/ELEE HI/NEW-8'	6	0.4	2,520	OCC SENSOR CEILING	1	290
IN	1259	John F. Kennedy-E	Bath 5	1	2x40W INCANDESCENTS	1	0.1	2L2' T8 15w/ELEE LO/NEW	1	0.0	3,320	TIMER WALLSWITCH 1GANG	1	24
IN	1260	John F. Kennedy-E	Classroom 3	1	4L4' T12 EE/EEMAG-8'	3	0.4	2L4' T8 28w/ELEE HI/NEW-8'	3	0.2	2,520	INCLUDED ABOVE		145
IN	1261	John F. Kennedy-E	Classroom 3	1	4L4' T12 EE/EEMAG-8'	6	0.8	2L4' T8 28w/ELEE HI/NEW-8'	6	0.4	2,520	OCC SENSOR CEILING	1	290
IN	1262	John F. Kennedy-E	Bath 3	1	2x40W INCANDESCENTS	1	0.1	2L2' T8 15w/ELEE LO/NEW	1	0.0	3,320	TIMER WALLSWITCH 1GANG	1	24
IN	1263	John F. Kennedy-E	Classroom 1	1	4L4' T12 EE/EEMAG-8'	3	0.4	2L4' T8 28w/ELEE HI/NEW-8'	3	0.2	2,520	INCLUDED ABOVE		145
IN	1264	John F. Kennedy-E	Classroom 1	1	4L4' T12 EE/EEMAG-8'	6	0.8	2L4' T8 28w/ELEE HI/NEW-8'	6	0.4	2,520	OCC SENSOR CEILING	1	290
IN	1265	John F. Kennedy-E	Bath 1	1	2x40W INCANDESCENTS	1	0.1	2L2' T8 15w/ELEE LO/NEW	1	0.0	3,320	TIMER WALLSWITCH 1GANG	1	24
IN	1266	John F. Kennedy-E	Classroom 4	1	4L4' T12 EE/EEMAG-8'	4	0.6	2L4' T8 28w/ELEE HI/NEW-8'	4	0.3	2,520	INCLUDED ABOVE		194
IN	1267	John F. Kennedy-E	Classroom 4	1	2L4' T12 EE/EEMAG	1	0.1	1L4' T8 28w/ELEE HI/NEW	1	0.0	2,520	INCLUDED ABOVE		25
IN	1268	John F. Kennedy-E	Classroom 4	1	4L4' T12 EE/EEMAG-8'	7	1.0	2L4' T8 28w/ELEE HI/NEW-8'	7	0.4	2,520	OCC SENSOR CEILING	1	339
IN	1269	John F. Kennedy-E	Classroom 4	1	2L4' T12 EE/EEMAG	1	0.1	1L4' T8 28w/ELEE HI/NEW	1	0.0	2,520	INCLUDED ABOVE		25
IN	1270	John F. Kennedy-E	Closet 4	1	22W & 32W CIRCLELINE I	1	0.1	2L2' T8 15w/ELEE LO/NEW	1	0.0	500	OCC SENSOR WALLSWITCH	1	4
IN	1271	John F. Kennedy-E	Bath 4	1	2x40W INCANDESCENTS	1	0.1	2L2' T8 15w/ELEE LO/NEW	1	0.0	3,320	TIMER WALLSWITCH 1GANG	1	24
IN	1272	John F. Kennedy-E	Closet Clean	1	3x13W COMPACT HARDV	1	0.0	NO RETRO		0.0	500	OCC SENSOR WALLSWITCH	1	7
IN	1273	John F. Kennedy-E	Classroom 6	1	4L4' T12 EE/EEMAG-8'	3	0.4	2L4' T8 28w/ELEE HI/NEW-8'	3	0.2	2,520	INCLUDED ABOVE		145
IN	1274	John F. Kennedy-E	Classroom 6	1	2L4' T12 EE/EEMAG	1	0.1	1L4' T8 28w/ELEE HI/NEW	1	0.0	2,520	INCLUDED ABOVE		25
IN	1275	John F. Kennedy-E	Classroom 6	1	4L4' T12 EE/EEMAG-8'	5	0.7	2L4' T8 28w/ELEE HI/NEW-8'	5	0.3	2,520	OCC SENSOR CEILING	1	242
IN	1276	John F. Kennedy-E	Classroom 6	1	2L4' T12 EE/EEMAG	2	0.1	1L4' T8 28w/ELEE HI/NEW	2	0.1	2,520	INCLUDED ABOVE		50
IN	1277	John F. Kennedy-E	Bath 6	1	2x40W INCANDESCENTS	1	0.1	2L2' T8 15w/ELEE LO/NEW	1	0.0	3,320	TIMER WALLSWITCH 1GANG	1	24
IN	1278	John F. Kennedy-E	Hall 10 To 1	1	2L4' T12 EE/EEMAG	14	1.0	1L4' T8 28w/ELEE HI/NEW	14	0.5	3,620	NO RETRO		
IN	1279	John F. Kennedy-E	Storage By Stair 1	1	2L4' T12 U EE/EEMAG	1	0.1	2L2' T8 15w/ELEE HI/RFL	1	0.0	500	NO RETRO		
IN	1280	John F. Kennedy-E	Storage By Stair 1	1	2x40W INCANDESCENTS	3	0.2	2L2' T8 15w/ELEE LO/NEW	3	0.1	500	NO RETRO		

In or Out	Line	Building Name	Location	Fl	Pre Fixture Description	Pre Qty	Pre kW	Post Fixture Description	Post Qty	Post kW	Annual Hours	*Control Description*	*Control Qty*	Control kWH Saved
IN	1281	John F. Kennedy-E	Lobby Elevator	1	3L4' T12 EE/EEMAG	4	0.4	3L4' T8 28w/ELEE LO	4	0.3	3,620	OCC SENSOR CEILING	2	274
IN	1282	John F. Kennedy-E	Classroom Music	1	6L2' T12 STD/STD	24	4.0	4L2' T8 15w/ELEE LO	24	1.3	2,520	OCC SENSOR CEILING	1	980
IN	1283	John F. Kennedy-E	Classroom Music	1	22W CIRCLELINE HARDW	3	0.1	2L2' T8 15w/ELEE LO/NEW	3	0.1	2,520	INCLUDED ABOVE		54
IN	1284	John F. Kennedy-E	Bath Staff	1	2L4' T8 32w/EL	1	0.1	1L4' T8 28w/ELEE HI/NEW	1	0.0	3,320	OCC SENSOR WALLSWITCH	1	33
IN	1285	John F. Kennedy-E	Bath Staff	1	2L2' T12 STD/STD	1	0.1	2L2' T8 15w/ELEE LO/NEW	1	0.0	3,320	INCLUDED ABOVE		24
IN	1286	John F. Kennedy-E	Bath Staff	1	4L4' T8 32w/EL	1	0.1	2L4' T8 28w/ELEE HI/NEW	1	0.1	3,320	OCC SENSOR WALLSWITCH	1	64
IN	1287	John F. Kennedy-E	Bath Staff	1	2L2' T12 STD/STD	1	0.1	2L2' T8 15w/ELEE LO/NEW	1	0.0	3,320	INCLUDED ABOVE		24
IN	1288	John F. Kennedy-E	Lounge Staff	1	4L4' T8 32w/EL	2	0.2	4L4' T8 28w/ELEE LO	2	0.2	2,520	OCC SENSOR CEILING	1	125
IN	1289	John F. Kennedy-E	Office Main	1	4L4' T12 EE/EEMAG-8'	2	0.3	2L4' T8 28w/ELEE HI/NEW-8'	2	0.1	2,320	OCC SENSOR CEILING	1	89
IN	1290	John F. Kennedy-E	Office Main	1	2L4' T12 EE/EEMAG	2	0.1	1L4' T8 28w/ELEE HI/NEW	2	0.1	2,320	INCLUDED ABOVE		46
IN	1291	John F. Kennedy-E	Office Principal	1	3L4' T12 EE/EEMAG	4	0.4	3L4' T8 28w/ELEE LO	4	0.3	2,320	OCC SENSOR CEILING	1	175
IN	1292	John F. Kennedy-E	Office Nurse	1	2L4' T12 EE/EEMAG	3	0.2	1L4' T8 28w/ELEE HI/NEW	3	0.1	2,320	OCC SENSOR CEILING	1	69
IN	1293	John F. Kennedy-E	Office Nurse	1	2L2' T12 STD/STD	1	0.1	2L2' T8 15w/ELEE LO/NEW	1	0.0	2,320	TIMER WALLSWITCH 1GANG	1	17
IN	1294	John F. Kennedy-E	Bath Nurse	1	3x13W COMPACT HARDV	1	0.0	NO RETRO		0.0	3,320	OCC SENSOR WALLSWITCH	1	45
IN	1295	John F. Kennedy-E	Kitchen Prep Area	1	4L4' T12 EE/EEMAG-8'	3	0.4	4L4' T8 28w/ELEE LO/NEW-8'	3	0.2	1,920	NO RETRO		
IN	1296	John F. Kennedy-E	Kitchen Prep Area	1	2L4' T12 EE/EEMAG	1	0.1	2L4' T8 28w/ELEE LO/NEW	1	0.0	1,920	NO RETRO		
IN	1297	John F. Kennedy-E	Kitchen Grease Hood	1	100W INCANDESCENT	1	0.1	23W COMPACT SI/29712/CF23I	1	0.0	1,920	NO RETRO		
IN	1298	John F. Kennedy-E	Kitchen Wash Area	1	2L4' T8 U/EL	2	0.1	2L2' T8 15w/ELEE HI/RFL	2	0.1	1,920	NO RETRO		
IN	1299	John F. Kennedy-E	Storage Dry Goods	1	2L4' T8 U/EL	2	0.1	2L2' T8 15w/ELEE HI/RFL	2	0.1	500	NO RETRO		
IN	1300	John F. Kennedy-E	Conference	1	4L4' T12 EE/EEMAG-8'	4	0.6	2L4' T8 28w/ELEE HI/NEW-8'	4	0.3	2,320	NO RETRO		
IN	1301	John F. Kennedy-E	Bath Boys	1	2L4' T8 U/EL	5	0.3	2L2' T8 15w/ELEE HI/RFL	5	0.2	3,320	OCC SENSOR CEIL DT 1GAN	1	164
IN	1302	John F. Kennedy-E	Bath Girls	1	2L4' T8 U/EL	5	0.3	2L2' T8 15w/ELEE HI/RFL	5	0.2	3,320	OCC SENSOR CEIL DT 1GAN	1	164
IN	1303	John F. Kennedy-E	Office Custodian	1	2L4' T12 EE/EEMAG	2	0.1	1L4' T8 28w/ELEE HI/NEW	2	0.1	2,320	TIMER WALLSWITCH 1GANG	1	46
IN	1304	John F. Kennedy-E	Mechanical Boiler	1	1L4' T12 EE/EEMAG	12	0.5	1L4' T8 28w/ELEE LO	12	0.3	500	NO RETRO		
IN	1305	John F. Kennedy-E	Stage	1	72W COMPACT SCREWIN	5	0.4	2L4' T8 28w/ELEE/NEW	5	0.2	2,320	NO RETRO		
IN	1306	John F. Kennedy-E	Stage	1	250W INCANDESCENT	1	0.3	2L4' T8 28w/ELEE/NEW	1	0.0	2,320	NO RETRO		
IN	1307	John F. Kennedy-E	Stage	1	100W INCANDESCENT	2	0.2	23W COMPACT SI/29712/CF23I	2	0.0	2,320	NO RETRO		
IN	1308	John F. Kennedy-E	Gym	1	400W METAL HALIDE	6	2.7	222 WATT LED/NEW	6	1.3	2,920	OCC. SENSOR ON HI BAY FI	6	1,167
IN	1309	John F. Kennedy-E	Hall By Gym	1	2L4' T12 EE/EEMAG	19	1.3	1L4' T8 28w/ELEE HI/NEW	19	0.6	3,620	NO RETRO		
IN	1310	John F. Kennedy-E	Bldg Mt Fixture 1	ext	250W HI PRESSURE SOD	13	3.8	133 WATT LED/NEW	13	1.7	4,380	NO RETRO		
IN	1311	John F. Kennedy-E	Bldg Mt Fixture 2	ext	250W HI PRESSURE SOD	1	0.3	133 WATT LED/NEW	1	0.1	4,380	NO RETRO		
IN	1312	John F. Kennedy-E	Bldg Mt Fixture 3	ext	50W HI PRESSURE SODI	3	0.2	26 WATT LED/NEW	3	0.1	4,380	NO RETRO		
IN	1313	John F. Kennedy-E	Bldg Mt Fixture 4	ext	50W HI PRESSURE SODI	1	0.1	26 WATT LED/NEW	1	0.0	4,380	NO RETRO		
IN	1314	John F. Kennedy-E	Bldg Mt Fixture 5	ext	3 WATT LED	1	0.0	NO RETRO		0.0	4,380	NO RETRO		
IN	1315	John F. Kennedy-E	Bldg Mt Fixture 6	ext	2x26W COMPACT HARDV	1	0.1	NO RETRO		0.1	4,380	NO RETRO		
IN	1316	John F. Kennedy-E	Bldg Mt Fixture 7	ext	100W HI PRESSURE SOD	1	0.1	49 WATT LED/NEW	1	0.0	4,380	NO RETRO		
IN	1317	Wayne Valley-High	Stair 7	s	2L4' T12 EE/EEMAG-8'	3	0.2	2L4' T8 28w/ELEE LO/NEW-8'	3	0.1	3,640	NO RETRO		
IN	1318	Wayne Valley-High	Stair 7	s	1L4' T12 EE/EEMAG	1	0.0	1L4' T8 28w/ELEE HI/NEW	1	0.0	3,640	NO RETRO		
IN	1319	Wayne Valley-High	Hall Stair 7 To Stair 4	2	1L4' T12 EE/EEMAG	27	1.1	1L4' T8 28w/ELEE HI/NEW	27	0.9	3,640	NO RETRO		
IN	1320	Wayne Valley-High	Hall Stair 7 To Stair 4	2	2L4' T12 EE/EEMAG-8'	8	0.6	2L4' T8 28w/ELEE LO/NEW-8'	8	0.3	3,640	NO RETRO		

In or Out	Line	Building Name	Location	Fl	Pre Fixture Description	Pre Qty	Pre kW	Post Fixture Description	Post Qty	Post kW	Annual Hours	*Control Description*	*Control Qty*	Control kWH Saved
IN	1321	Wayne Valley-High	Hall Stair 7 To Stair 4	2	1L4' T12 EE/EEMAG	2	0.1	1L4' T8 28w/ELEE LO/STRIP KI	2	0.0	3,640	NO RETRO		
IN	1322	Wayne Valley-High	Classroom 223	2	4L4' T12 EE/EEMAG-8'	15	2.1	2L4' T8 28w/ELEE HI/NEW-8'	15	1.0	2,840	OCC SENSOR CORNER MT.	1	818
IN	1323	Wayne Valley-High	Classroom 223	2	4L4' T12 EE/EEMAG-8'	15	2.1	2L4' T8 28w/ELEE HI/NEW-8'	15	1.0	2,840	OCC SENSOR CORNER MT.	1	818
IN	1324	Wayne Valley-High	Classroom 223	2	2L4' T12 EE/EEMAG	3	0.2	1L4' T8 28w/ELEE HI/NEW	3	0.1	2,840	INCLUDED ABOVE		84
IN	1325	Wayne Valley-High	Office Wcma	2	2L4' T12 EE/EEMAG	4	0.3	1L4' T8 28w/ELEE HI/NEW	4	0.1	2,840	OCC SENSOR CEILING	1	112
IN	1326	Wayne Valley-High	Classroom 222Pr	2	4L4' T12 EE/EEMAG-8'	1	0.1	2L4' T8 28w/ELEE HI/NEW-8'	1	0.1	2,840	OCC SENSOR WALLSWITCH	1	55
IN	1327	Wayne Valley-High	Classroom 222Pr	2	4L4' T12 EE/EEMAG-8'	9	1.3	2L4' T8 28w/ELEE HI/NEW-8'	9	0.6	2,840	OCC SENSOR CORNER MT.	1	491
IN	1328	Wayne Valley-High	Storage Sc222	2	2L4' T12 EE/EEMAG	4	0.3	1L4' T8 28w/ELEE HI/NEW	4	0.1	500	OCC SENSOR WALLSWITCH	1	20
IN	1329	Wayne Valley-High	Classroom 225	2	4L4' T12 EE/EEMAG-8'	15	2.1	2L4' T8 28w/ELEE HI/NEW-8'	15	1.0	2,840	OCC SENSOR CORNER MT.	1	818
IN	1330	Wayne Valley-High	Classroom 225	2	2L4' T12 EE/EEMAG	3	0.2	1L4' T8 28w/ELEE HI/NEW	3	0.1	2,840	INCLUDED ABOVE		84
IN	1331	Wayne Valley-High	Classroom 222	2	4L4' T12 EE/EEMAG-8'	15	2.1	2L4' T8 28w/ELEE HI/NEW-8'	15	1.0	2,840	OCC SENSOR CORNER MT.	1	818
IN	1332	Wayne Valley-High	Classroom 222	2	2L4' T12 EE/EEMAG	3	0.2	1L4' T8 28w/ELEE HI/NEW	3	0.1	2,840	INCLUDED ABOVE		84
IN	1333	Wayne Valley-High	Classroom 221	2	6L4' T8 32w/EL-8'	9	1.6	6L4' T8 28w/ELEE LO-8'	9	1.1	2,840	OCC SENSOR CEILING	1	966
IN	1334	Wayne Valley-High	Classroom 221	2	3L4' T8 32w/EL	3	0.3	3L4' T8 28w/ELEE LO	3	0.2	2,840	INCLUDED ABOVE		161
IN	1335	Wayne Valley-High	Storage 220Me	2	42W COMPACT HARDWI	7	0.3	2L4' T8 28w/ELEE LO/NEW	7	0.3	500	NO RETRO		
IN	1336	Wayne Valley-High	Bath 220Wt	2	2L4' T8 32w/EL-8'	1	0.1	2L4' T8 28w/ELEE LO/NEW-8'	1	0.0	3,640	NO RETRO		
IN	1337	Wayne Valley-High	Bath 220Wt	2	1L4' T8 32w/EL	1	0.0	1L4' T8 28w/ELEE HI/NEW	1	0.0	3,640	NO RETRO		
IN	1338	Wayne Valley-High	Bath 220Wt	2	1L4' T12 EE/EEMAG	1	0.0	1L4' T8 28w/ELEE LO/NEW	1	0.0	3,640	NO RETRO		
IN	1339	Wayne Valley-High	Bath 220Mt	2	2L4' T8 32w/EL-8'	1	0.1	2L4' T8 28w/ELEE LO/NEW-8'	1	0.0	3,640	NO RETRO		
IN	1340	Wayne Valley-High	Bath 220Mt	2	1L4' T8 32w/EL	1	0.0	1L4' T8 28w/ELEE HI/NEW	1	0.0	3,640	NO RETRO		
IN	1341	Wayne Valley-High	Bath 220Mt	2	1L4' T8 32w/EL	1	0.0	1L4' T8 28w/ELEE LO/NEW	1	0.0	3,640	NO RETRO		
IN	1342	Wayne Valley-High	Bath 220Bt	2	2L4' T12 EE/EEMAG-8'	1	0.1	2L4' T8 28w/ELEE LO/NEW-8'	1	0.0	3,640	NO RETRO		
IN	1343	Wayne Valley-High	Bath 220Bt	2	1L4' T12 EE/EEMAG	1	0.0	1L4' T8 28w/ELEE HI/NEW	1	0.0	3,640	NO RETRO		
IN	1344	Wayne Valley-High	Bath 220Bt	2	1L4' T12 EE/EEMAG	1	0.0	1L4' T8 28w/ELEE LO/NEW	1	0.0	3,640	NO RETRO		
IN	1345	Wayne Valley-High	Closet Clean	2	100W INCANDESCENT	1	0.1	23W COMPACT SI/29712/CF23I	1	0.0	500	OCC SENSOR WALLSWITCH	1	3
IN	1346	Wayne Valley-High	Bath 220Gt	2	2L4' T12 EE/EEMAG-8'	1	0.1	2L4' T8 28w/ELEE LO/NEW-8'	1	0.0	3,640	NO RETRO		
IN	1347	Wayne Valley-High	Bath 220Gt	2	1L4' T12 EE/EEMAG	1	0.0	1L4' T8 28w/ELEE HI/NEW	1	0.0	3,640	NO RETRO		
IN	1348	Wayne Valley-High	Bath 220Gt	2	1L4' T12 EE/EEMAG	1	0.0	1L4' T8 28w/ELEE LO/NEW	1	0.0	3,640	NO RETRO		
IN	1349	Wayne Valley-High	Stair 4	s	1L4' T12 EE/EEMAG	4	0.2	1L4' T8 28w/ELEE HI/NEW	4	0.1	3,640	NO RETRO		
IN	1350	Wayne Valley-High	Hall 219 To 217	2	1L4' T12 EE/EEMAG	14	0.6	1L4' T8 28w/ELEE HI/NEW	14	0.5	3,640	NO RETRO		
IN	1351	Wayne Valley-High	Classroom 219	2	4L4' T12 EE/EEMAG-8'	16	2.2	2L4' T8 28w/ELEE HI/NEW-8'	16	1.0	2,840	OCC SENSOR CEILING	1	872
IN	1352	Wayne Valley-High	Storage 219	2	2L4' T12 EE/EEMAG	1	0.1	2L4' T8 28w/ELEE LO	1	0.0	500	OCC SENSOR WALLSWITCH	1	6
IN	1353	Wayne Valley-High	Office 219	2	2L4' T12 EE/EEMAG	1	0.1	1L4' T8 28w/ELEE HI/NEW	1	0.0	2,840	OCC SENSOR WALLSWITCH	1	28
IN	1354	Wayne Valley-High	Storage Kiln	2	4L4' T12 EE/EEMAG-8'	2	0.3	2L4' T8 28w/ELEE HI/NEW-8'	2	0.1	2,440	OCC SENSOR WALLSWITCH	2	94
IN	1355	Wayne Valley-High	Office 218	2	2L4' T8 32w/EL	2	0.1	1L4' T8 28w/ELEE HI/NEW	2	0.1	2,840	OCC SENSOR WALLSWITCH	1	56
IN	1356	Wayne Valley-High	Office 218	2	2L4' T12 EE/EEMAG	1	0.1	2L4' T8 28w/ELEE LO	1	0.0	2,840	INCLUDED ABOVE		36
IN	1357	Wayne Valley-High	Classroom 218	2	4L4' T12 EE/EEMAG-8'	16	2.2	2L4' T8 28w/ELEE HI/NEW-8'	16	1.0	2,840	OCC SENSOR CEILING	1	872
IN	1358	Wayne Valley-High	Storage Supplies	2	1L4' T12 EE/EEMAG	1	0.0	1L4' T8 28w/ELEE HI/NEW	1	0.0	2,440	NO RETRO		
IN	1359	Wayne Valley-High	Office 218	2	2L4' T12 EE/EEMAG	1	0.1	1L4' T8 28w/ELEE HI/NEW	1	0.0	2,840	OCC SENSOR WALLSWITCH	1	28
IN	1360	Wayne Valley-High	Storage By 218	2	2L4' T12 EE/EEMAG	6	0.4	1L4' T8 28w/ELEE HI/NEW	6	0.2	2,440	OCC SENSOR WALLSWITCH	1	145

In or Out	Line	Building Name	Location	Fl	Pre Fixture Description	Pre Qty	Pre kW	Post Fixture Description	Post Qty	Post kW	Annual Hours	*Control Description*	*Control Qty*	Control kWH Saved
IN	1361	Wayne Valley-High	Classroom 217	2	4L4' T12 EE/EEMAG-8'	9	1.3	2L4' T8 28w/ELEE HI/NEW-8'	9	0.6	2,840	OCC SENSOR CEILING	1	491
IN	1362	Wayne Valley-High	Stair 5	s	2L4' T12 EE/EEMAG-8'	3	0.2	2L4' T8 28w/ELEE LO/NEW-8'	3	0.1	3,640	NO RETRO		
IN	1363	Wayne Valley-High	Stair 5	s	2L4' T12 EE/EEMAG	1	0.1	1L4' T8 28w/ELEE HI/NEW	1	0.0	3,640	NO RETRO		
IN	1364	Wayne Valley-High	Hall Foot Bridge	2	2L4' T8 32w/EL	3	0.2	2L4' T8 28w/ELEE LO	3	0.1	3,640	DAYLIGHT HARVESTING SYS	3	229
IN	1365	Wayne Valley-High	Hall Foot Bridge	2	2L4' T8 32w/EL	4	0.2	2L4' T8 28w/ELEE LO	4	0.2	2,548	ALREADY EXISTS		
IN	1366	Wayne Valley-High	Hall 256 To Foot Bridge	2	4L4' T8 32w/EL	1	0.1	4L4' T8 28w/ELEE LO	1	0.1	3,640	NO RETRO		
IN	1367	Wayne Valley-High	Hall 256 To Foot Bridge	2	2L4' T8 32w/EL	3	0.2	2L4' T8 28w/ELEE LO	3	0.1	3,640	DAYLIGHT HARVESTING SYS	3	229
IN	1368	Wayne Valley-High	Hall 256 To Foot Bridge	2	2L4' T8 32w/EL	11	0.7	2L4' T8 28w/ELEE LO	11	0.5	2,548	ALREADY EXISTS		
IN	1369	Wayne Valley-High	Hall 256 To Foot Bridge	2	4L4' T8 32w/EL	4	0.4	4L4' T8 28w/ELEE LO	4	0.3	2,548	ALREADY EXISTS		
IN	1370	Wayne Valley-High	Stair By 250	s	150W METAL HALIDE	3	0.6	NO RETRO		0.6	3,640	PHOTO SENSOR FOR ON/OF	1	622
IN	1371	Wayne Valley-High	Stair By 250	s	2L4' T8 32w/EL	1	0.1	2L4' T8 28w/ELEE LO	1	0.0	3,640	INCLUDED ABOVE		46
IN	1372	Wayne Valley-High	Stair By 256	s	2L4' T8 32w/EL	3	0.2	2L4' T8 28w/ELEE LO	3	0.1	3,640	NO RETRO		
IN	1373	Wayne Valley-High	Stair By 256	s	2L4' T8 32w/EL	1	0.1	2L4' T8 28w/ELEE LO	1	0.0	3,640	NO RETRO		
IN	1374	Wayne Valley-High	Classroom 256	2	3L4' T8 32w/EL	15	1.3	2L4' T8 28w/ELEE HI/RFL	15	1.0	2,840	OCC SENSOR CEILING	1	818
IN	1375	Wayne Valley-High	Classroom 253	2	3L4' T8 32w/EL	15	1.3	2L4' T8 28w/ELEE HI/RFL	15	1.0	2,840	OCC SENSOR CEILING	1	818
IN	1376	Wayne Valley-High	Storage 253Sc	2	2L4' T8 32w/EL	4	0.2	1L4' T8 28w/ELEE HI/NEW	4	0.1	500	OCC SENSOR WALLSWITCH	1	20
IN	1377	Wayne Valley-High	Storage 253Sc	2	2L4' T8 32w/EL	1	0.1	1L4' T8 28w/ELEE HI/NEW	1	0.0	500	OCC SENSOR WALLSWITCH	1	5
IN	1378	Wayne Valley-High	Classroom 254	2	3L4' T8 32w/EL	15	1.3	2L4' T8 28w/ELEE HI/RFL	15	1.0	2,840	OCC SENSOR CEILING	1	818
IN	1379	Wayne Valley-High	Storage Prep Room	2	3L4' T8 32w/EL	3	0.3	2L4' T8 28w/ELEE HI/RFL	3	0.2	500	OCC SENSOR CEILING	1	29
IN	1380	Wayne Valley-High	Bath 251Gr	2	2L2' F40 BIAX/EL	1	0.1	2L2' F40BIAX/EL28W	1	0.1	3,640	OCC SENSOR CEIL DT 1GAN	1	69
IN	1381	Wayne Valley-High	Bath 251Gr	2	2L4' T8 32w/EL	3	0.2	2L4' T8 28w/ELEE LO	3	0.1	3,640	INCLUDED ABOVE		138
IN	1382	Wayne Valley-High	Closet 251Jc	2	2L4' T8 32w/EL	1	0.1	1L4' T8 28w/ELEE HI/NEW	1	0.0	350	ALREADY EXISTS		
IN	1383	Wayne Valley-High	Bath 251Br	2	2L2' F40 BIAX/EL	1	0.1	2L2' F40BIAX/EL28W	1	0.1	3,640	OCC SENSOR CEIL DT 1GAN	1	69
IN	1384	Wayne Valley-High	Bath 251Br	2	2L4' T8 32w/EL	3	0.2	2L4' T8 28w/ELEE LO	3	0.1	3,640	INCLUDED ABOVE		138
IN	1385	Wayne Valley-High	Classroom 251	2	3L4' T8 32w/EL	9	0.8	2L4' T8 28w/ELEE HI/RFL	9	0.6	2,840	OCC SENSOR CEILING	1	491
IN	1386	Wayne Valley-High	Classroom 249	2	3L4' T8 32w/EL	9	0.8	2L4' T8 28w/ELEE HI/RFL	9	0.6	2,840	OCC SENSOR CEILING	1	491
IN	1387	Wayne Valley-High	Classroom 252	2	3L4' T8 32w/EL	8	0.7	2L4' T8 28w/ELEE HI/RFL	8	0.5	2,840	OCC SENSOR CEILING	1	436
IN	1388	Wayne Valley-High	Classroom 250	2	3L4' T8 32w/EL	8	0.7	2L4' T8 28w/ELEE HI/RFL	8	0.5	2,840	OCC SENSOR CEILING	1	436
IN	1389	Wayne Valley-High	Classroom 248	2	4L4' T12 EE/EEMAG-8'	6	0.8	2L4' T8 28w/ELEE HI/NEW-8'	6	0.4	2,840	OCC SENSOR CEILING	1	327
IN	1390	Wayne Valley-High	Classroom 248	2	2L4' T12 EE/EEMAG	2	0.1	1L4' T8 28w/ELEE HI/NEW	2	0.1	2,840	INCLUDED ABOVE		56
IN	1391	Wayne Valley-High	Classroom 247	2	4L4' T12 EE/EEMAG-8'	6	0.8	2L4' T8 28w/ELEE HI/NEW-8'	6	0.4	2,840	OCC SENSOR CEILING	1	327
IN	1392	Wayne Valley-High	Classroom 247	2	2L4' T12 EE/EEMAG	3	0.2	1L4' T8 28w/ELEE HI/NEW	3	0.1	2,840	INCLUDED ABOVE		84
IN	1393	Wayne Valley-High	Classroom 246	2	4L4' T12 EE/EEMAG-8'	6	0.8	2L4' T8 28w/ELEE HI/NEW-8'	6	0.4	2,840	OCC SENSOR CEILING	1	327
IN	1394	Wayne Valley-High	Classroom 246	2	2L4' T12 EE/EEMAG	3	0.2	1L4' T8 28w/ELEE HI/NEW	3	0.1	2,840	INCLUDED ABOVE		84
IN	1395	Wayne Valley-High	Classroom 245	2	4L4' T12 EE/EEMAG-8'	6	0.8	2L4' T8 28w/ELEE HI/NEW-8'	6	0.4	2,840	OCC SENSOR CEILING	1	327
IN	1396	Wayne Valley-High	Classroom 245	2	2L4' T12 EE/EEMAG	3	0.2	1L4' T8 28w/ELEE HI/NEW	3	0.1	2,840	INCLUDED ABOVE		84
IN	1397	Wayne Valley-High	Office 244	2	4L4' T12 EE/EEMAG-8'	4	0.6	2L4' T8 28w/ELEE HI/NEW-8'	4	0.3	2,840	OCC SENSOR CEILING	1	218
IN	1398	Wayne Valley-High	Mechanical 243	2	150W INCANDESCENT	3	0.5	2L2' T8 15w/ELEE LO/NEW	3	0.1	500	NO RETRO		
IN	1399	Wayne Valley-High	Hall 248 To 237	2	1L4' T12 EE/EEMAG	26	1.0	1L4' T8 28w/ELEE HI/NEW	26	0.9	3,640	NO RETRO		
IN	1400	Wayne Valley-High	Hall Display Case	2	1L4' T12 EE/EEMAG	2	0.1	1L4' T8 28w/ELEE LO/STRIP KI	2	0.0	3,640	NO RETRO		

In or Out	Line	Building Name	Location	Fl	Pre Fixture Description	Pre Qty	Pre kW	Post Fixture Description	Post Qty	Post kW	Annual Hours	*Control Description*	*Control Qty*	Control kWH Saved
IN	1401	Wayne Valley-High	Classroom 243	2	4L4' T12 EE/EEMAG-8'	6	0.8	2L4' T8 28w/ELEE HI/NEW-8'	6	0.4	2,840	OCC SENSOR CEILING	1	327
IN	1402	Wayne Valley-High	Classroom 243	2	2L4' T12 EE/EEMAG	3	0.2	1L4' T8 28w/ELEE HI/NEW	3	0.1	2,840	INCLUDED ABOVE		84
IN	1403	Wayne Valley-High	Classroom 242	2	4L4' T12 EE/EEMAG-8'	6	0.8	2L4' T8 28w/ELEE HI/NEW-8'	6	0.4	2,840	OCC SENSOR CEILING	1	327
IN	1404	Wayne Valley-High	Classroom 242	2	2L4' T12 EE/EEMAG	3	0.2	1L4' T8 28w/ELEE HI/NEW	3	0.1	2,840	INCLUDED ABOVE		84
IN	1405	Wayne Valley-High	Office 233	2	4L4' T12 EE/EEMAG-8'	2	0.3	2L4' T8 28w/ELEE HI/NEW-8'	2	0.1	2,840	OCC SENSOR WALLSWITCH	1	109
IN	1406	Wayne Valley-High	Office 233	2	2L4' T12 EE/EEMAG	2	0.1	1L4' T8 28w/ELEE HI/NEW	2	0.1	2,840	INCLUDED ABOVE		56
IN	1407	Wayne Valley-High	Office 241	2	4L4' T12 EE/EEMAG-8'	4	0.6	2L4' T8 28w/ELEE HI/NEW-8'	4	0.3	2,840	OCC SENSOR CEILING	1	218
IN	1408	Wayne Valley-High	Office 240	2	4L4' T12 EE/EEMAG-8'	4	0.6	2L4' T8 28w/ELEE HI/NEW-8'	4	0.3	2,840	OCC SENSOR CEILING	1	218
IN	1409	Wayne Valley-High	Classroom 234	2	4L4' T12 EE/EEMAG-8'	6	0.8	2L4' T8 28w/ELEE HI/NEW-8'	6	0.4	2,840	OCC SENSOR CEILING	1	327
IN	1410	Wayne Valley-High	Classroom 234	2	2L4' T12 EE/EEMAG	3	0.2	1L4' T8 28w/ELEE HI/NEW	3	0.1	2,840	INCLUDED ABOVE		84
IN	1411	Wayne Valley-High	Classroom 239	2	4L4' T12 EE/EEMAG-8'	6	0.8	2L4' T8 28w/ELEE HI/NEW-8'	6	0.4	2,840	OCC SENSOR CEILING	1	327
IN	1412	Wayne Valley-High	Classroom 239	2	2L4' T12 EE/EEMAG	3	0.2	1L4' T8 28w/ELEE HI/NEW	3	0.1	2,840	INCLUDED ABOVE		84
IN	1413	Wayne Valley-High	Classroom 235	2	4L4' T12 EE/EEMAG-8'	6	0.8	2L4' T8 28w/ELEE HI/NEW-8'	6	0.4	2,840	OCC SENSOR CEILING	1	327
IN	1414	Wayne Valley-High	Classroom 235	2	2L4' T12 EE/EEMAG	3	0.2	1L4' T8 28w/ELEE HI/NEW	3	0.1	2,840	INCLUDED ABOVE		84
IN	1415	Wayne Valley-High	Classroom 238	2	4L4' T12 EE/EEMAG-8'	6	0.8	2L4' T8 28w/ELEE HI/NEW-8'	6	0.4	2,840	OCC SENSOR CEILING	1	327
IN	1416	Wayne Valley-High	Classroom 238	2	2L4' T12 EE/EEMAG	3	0.2	1L4' T8 28w/ELEE HI/NEW	3	0.1	2,840	INCLUDED ABOVE		84
IN	1417	Wayne Valley-High	Classroom 236	2	4L4' T12 EE/EEMAG-8'	6	0.8	2L4' T8 28w/ELEE HI/NEW-8'	6	0.4	2,840	OCC SENSOR CEILING	1	327
IN	1418	Wayne Valley-High	Classroom 236	2	2L4' T12 EE/EEMAG	3	0.2	1L4' T8 28w/ELEE HI/NEW	3	0.1	2,840	INCLUDED ABOVE		84
IN	1419	Wayne Valley-High	Classroom 237	2	4L4' T12 EE/EEMAG-8'	6	0.8	2L4' T8 28w/ELEE HI/NEW-8'	6	0.4	2,840	OCC SENSOR CEILING	1	327
IN	1420	Wayne Valley-High	Classroom 237	2	2L4' T12 EE/EEMAG	3	0.2	1L4' T8 28w/ELEE HI/NEW	3	0.1	2,840	INCLUDED ABOVE		84
IN	1421	Wayne Valley-High	Stair 6	s	2L4' T12 EE/EEMAG-8'	2	0.1	2L4' T8 28w/ELEE LO/NEW-8'	2	0.1	3,640	NO RETRO		
IN	1422	Wayne Valley-High	Stair 6	s	2L4' T12 EE/EEMAG-8'	1	0.1	2L4' T8 28w/ELEE LO/NEW-8'	1	0.0	3,640	INCLUDED ABOVE		46
IN	1423	Wayne Valley-High	Stair 6	s	1L4' T12 EE/EEMAG	2	0.1	1L4' T8 28w/ELEE HI/NEW	2	0.1	3,640	NO RETRO		
IN	1424	Wayne Valley-High	Hall 233 To 225	2	1L4' T12 EE/EEMAG	8	0.3	1L4' T8 28w/ELEE HI/NEW	8	0.3	3,640	NO RETRO		
IN	1425	Wayne Valley-High	Hall 233 To 225	2	2L4' T8 32w/EL	11	0.7	2L4' T8 28w/ELEE LO	11	0.5	3,640	DAYLIGHT HARVESTING SYS	11	841
IN	1426	Wayne Valley-High	Closet Clean	2	100W INCANDESCENT	1	0.1	23W COMPACT SI/29712/CF23I	1	0.0	500	OCC SENSOR WALLSWITCH	1	3
IN	1427	Wayne Valley-High	Storage 231	2	2L4' T12 EE/EEMAG	2	0.1	1L4' T8 28w/ELEE HI/NEW	2	0.1	500	OCC SENSOR WALLSWITCH	1	10
IN	1428	Wayne Valley-High	Office 230	2	2L4' T8 32w/EL	2	0.1	1L4' T8 28w/ELEE HI/NEW	2	0.1	2,840	OCC SENSOR WALLSWITCH	1	56
IN	1429	Wayne Valley-High	Office 232	2	4L4' T12 EE/EEMAG-8'	3	0.4	2L4' T8 28w/ELEE HI/NEW-8'	3	0.2	2,840	OCC SENSOR WALLSWITCH	1	164
IN	1430	Wayne Valley-High	Office 232	2	2L4' T12 EE/EEMAG	3	0.2	1L4' T8 28w/ELEE HI/NEW	3	0.1	2,840	INCLUDED ABOVE		84
IN	1431	Wayne Valley-High	Office 229	2	2L4' T12 EE/EEMAG	2	0.1	1L4' T8 28w/ELEE HI/NEW	2	0.1	2,840	OCC SENSOR WALLSWITCH	1	56
IN	1432	Wayne Valley-High	Classroom 228	2	4L4' T8 32w/EL	9	1.0	2L4' T8 28w/ELEE HI/RFL	9	0.6	2,840	OCC SENSOR CEILING	1	491
IN	1433	Wayne Valley-High	Classroom 227	2	3L4' T8 32w/EL	6	0.5	2L4' T8 28w/ELEE HI/RFL	6	0.4	2,840	OCC SENSOR CEILING	1	327
IN	1434	Wayne Valley-High	Office 226	2	3L4' T8 32w/EL	6	0.5	3L4' T8 28w/ELEE LO (1L&2L BA	6	0.4	2,840	OCC SENSOR CEILING	1	327
IN	1435	Wayne Valley-High	Office 226Sc	2	3L4' T8 32w/EL	9	0.8	3L4' T8 28w/ELEE LO (1L&2L BA	9	0.6	2,840	OCC SENSOR CEILING	1	491
IN	1436	Wayne Valley-High	Hall Stair 4 To Stair 3	2	1L4' T12 EE/EEMAG	9	0.4	1L4' T8 28w/ELEE HI/NEW	9	0.3	3,640	NO RETRO		
IN	1437	Wayne Valley-High	Hall Stair 3 To Stair 1	2	2L4' T8 32w/EL	32	1.9	2L4' T8 28w/ELEE LO	32	1.3	3,640	NO RETRO		
IN	1438	Wayne Valley-High	Stair 3	s	1L4' T12 EE/EEMAG	4	0.2	1L4' T8 28w/ELEE HI/NEW	4	0.1	3,640	NO RETRO		
IN	1439	Wayne Valley-High	Office Across From 216	2	2L4' T8 32w/EL	1	0.1	2L4' T8 28w/ELEE LO	1	0.0	2,840	OCC SENSOR WALLSWITCH	1	36
IN	1440	Wayne Valley-High	Closet Clean	2	100W INCANDESCENT	1	0.1	23W COMPACT SI/29712/CF23I	1	0.0	500	OCC SENSOR WALLSWITCH	1	3

In or Out	Line	Building Name	Location	Fl	Pre Fixture Description	Pre Qty	Pre kW	Post Fixture Description	Post Qty	Post kW	Annual Hours	*Control Description*	*Control Qty*	Control kWH Saved
IN	1441	Wayne Valley-High	Hall 216	2	4L4' T12 EE/EEMAG	2	0.3	2L4' T8 28w/ELEE HI/NEW	2	0.1	3,640	NO RETRO		
IN	1442	Wayne Valley-High	Closet 216Gs	2	100W INCANDESCENT	1	0.1	23W COMPACT SI/29712/CF23I	1	0.0	500	NO RETRO		
IN	1443	Wayne Valley-High	Closet 206	2	4L4' T12 EE/EEMAG	1	0.1	2L4' T8 28w/ELEE HI/NEW	1	0.1	500	OCC SENSOR WALLSWITCH	1	10
IN	1444	Wayne Valley-High	Office 216	2	4L4' T12 EE/EEMAG	4	0.6	2L4' T8 28w/ELEE HI/NEW	4	0.3	2,840	OCC SENSOR CEILING	1	218
IN	1445	Wayne Valley-High	Classroom 215	2	4L4' T8 32w/EL	8	0.9	2L4' T8 28w/ELEE HI/RFL	8	0.5	2,840	OCC SENSOR CEILING	1	436
IN	1446	Wayne Valley-High	Classroom 213	2	4L4' T12 EE/EEMAG-8'	4	0.6	2L4' T8 28w/ELEE HI/NEW-8'	4	0.3	2,840	OCC SENSOR CEILING	1	218
IN	1447	Wayne Valley-High	Classroom 213	2	2L4' T12 EE/EEMAG	4	0.3	1L4' T8 28w/ELEE HI/NEW	4	0.1	2,840	INCLUDED ABOVE		112
IN	1448	Wayne Valley-High	Classroom 214	2	2L4' T12 EE/EEMAG	8	0.6	1L4' T8 28w/ELEE HI/NEW	8	0.3	2,840	OCC SENSOR CEILING	1	225
IN	1449	Wayne Valley-High	Classroom 212	2	4L4' T12 EE/EEMAG	4	0.6	2L4' T8 28w/ELEE HI/NEW	4	0.3	2,840	OCC SENSOR CEILING	1	218
IN	1450	Wayne Valley-High	Classroom 211	2	4L4' T12 EE/EEMAG-8'	4	0.6	2L4' T8 28w/ELEE HI/NEW-8'	4	0.3	2,840	OCC SENSOR CEILING	1	218
IN	1451	Wayne Valley-High	Classroom 211	2	2L4' T12 EE/EEMAG	4	0.3	1L4' T8 28w/ELEE HI/NEW	4	0.1	2,840	INCLUDED ABOVE		112
IN	1452	Wayne Valley-High	Office 209	2	3x60W INCANDESCENTS	4	0.7	2L2' T8 15w/ELEE LO/NEW	4	0.1	2,840	OCC SENSOR CEILING	1	82
IN	1453	Wayne Valley-High	Classroom 210	2	4L4' T12 EE/EEMAG-8'	4	0.6	2L4' T8 28w/ELEE HI/NEW-8'	4	0.3	2,840	OCC SENSOR CEILING	1	218
IN	1454	Wayne Valley-High	Classroom 210	2	2L4' T12 EE/EEMAG	4	0.3	1L4' T8 28w/ELEE HI/NEW	4	0.1	2,840	INCLUDED ABOVE		112
IN	1455	Wayne Valley-High	Storage 210	2	2L4' T12 EE/EEMAG	1	0.1	1L4' T8 28w/ELEE HI/NEW	1	0.0	500	OCC SENSOR WALLSWITCH	1	5
IN	1456	Wayne Valley-High	Mechanical Fan Room	2	32W COMPACT SCREWIN	2	0.1	NO RETRO		0.1	500	OCC SENSOR WALLSWITCH	1	10
IN	1457	Wayne Valley-High	Bath 208Gt	2	1L4' T12 EE/EEMAG	3	0.1	1L4' T8 28w/ELEE HI/NEW	3	0.1	3,640	NO RETRO		
IN	1458	Wayne Valley-High	Storage 201	2	4L4' T12 EE/EEMAG	2	0.3	2L4' T8 28w/ELEE HI/NEW	2	0.1	500	OCC SENSOR WALLSWITCH	1	19
IN	1459	Wayne Valley-High	Office 208	2	300W INCANDESCENT	2	0.6	1L4' T8 28w/ELEE HI/NEW	2	0.1	2,840	OCC SENSOR WALLSWITCH	1	56
IN	1460	Wayne Valley-High	Closet 208Jc	2	150W INCANDESCENT	1	0.2	23W COMPACT SI/29712/CF23I	1	0.0	500	OCC SENSOR WALLSWITCH	1	3
IN	1461	Wayne Valley-High	Mechanical Air Handle	2	150W INCANDESCENT	4	0.6	23W COMPACT SI/29712/CF23I	4	0.1	500	NO RETRO		
IN	1462	Wayne Valley-High	Bath 208Bt	2	1L4' T12 EE/EEMAG	3	0.1	1L4' T8 28w/ELEE HI/NEW	3	0.1	3,640	NO RETRO		
IN	1463	Wayne Valley-High	Closet 202	2	3x60W INCANDESCENTS	2	0.4	2L2' T8 15w/ELEE LO/NEW	2	0.0	500	OCC SENSOR WALLSWITCH	1	7
IN	1464	Wayne Valley-High	Stair 2	s	1L4' T12 EE/EEMAG	4	0.2	1L4' T8 28w/ELEE HI/NEW	4	0.1	3,640	NO RETRO		
IN	1465	Wayne Valley-High	Classroom 207	2	4L4' T8 32w/EL	4	0.4	2L4' T8 28w/ELEE HI/RFL	4	0.3	2,840	OCC SENSOR CEILING	1	218
IN	1466	Wayne Valley-High	Office 207A	2	2L4' T8 32w/EL	2	0.1	1L4' T8 28w/ELEE HI/NEW	2	0.1	2,840	OCC SENSOR WALLSWITCH	1	56
IN	1467	Wayne Valley-High	Office 207B	2	2L4' T8 32w/EL	3	0.2	1L4' T8 28w/ELEE HI/NEW	3	0.1	2,840	OCC SENSOR WALLSWITCH	1	84
IN	1468	Wayne Valley-High	Classroom 205	2	4L4' T12 EE/EEMAG-8'	6	0.8	2L4' T8 28w/ELEE HI/NEW-8'	6	0.4	2,840	OCC SENSOR CEILING	1	327
IN	1469	Wayne Valley-High	Classroom 205	2	2L4' T12 EE/EEMAG	2	0.1	1L4' T8 28w/ELEE HI/NEW	2	0.1	2,840	INCLUDED ABOVE		56
IN	1470	Wayne Valley-High	Classroom 206	2	4L4' T12 EE/EEMAG-8'	4	0.6	2L4' T8 28w/ELEE HI/NEW-8'	4	0.3	2,840	OCC SENSOR CEILING	1	218
IN	1471	Wayne Valley-High	Classroom 206	2	2L4' T12 EE/EEMAG	4	0.3	1L4' T8 28w/ELEE HI/NEW	4	0.1	2,840	INCLUDED ABOVE		112
IN	1472	Wayne Valley-High	Classroom 204	2	4L4' T12 EE/EEMAG-8'	3	0.4	2L4' T8 28w/ELEE HI/NEW-8'	3	0.2	2,840	OCC SENSOR CEILING	1	164
IN	1473	Wayne Valley-High	Classroom 204	2	2L4' T12 EE/EEMAG	3	0.2	1L4' T8 28w/ELEE HI/NEW	3	0.1	2,840	INCLUDED ABOVE		84
IN	1474	Wayne Valley-High	Office 203	2	2L4' T12 EE/EEMAG	2	0.1	1L4' T8 28w/ELEE HI/NEW	2	0.1	2,840	OCC SENSOR CEILING	1	56
IN	1475	Wayne Valley-High	Classroom 202	2	4L4' T12 EE/EEMAG-8'	4	0.6	2L4' T8 28w/ELEE HI/NEW-8'	4	0.3	2,840	OCC SENSOR CEILING	1	218
IN	1476	Wayne Valley-High	Classroom 202	2	2L4' T12 EE/EEMAG	4	0.3	1L4' T8 28w/ELEE HI/NEW	4	0.1	2,840	INCLUDED ABOVE		112
IN	1477	Wayne Valley-High	Classroom 203	2	2L4' T12 EE/EEMAG	10	0.7	1L4' T8 28w/ELEE HI/NEW	10	0.3	2,840	OCC SENSOR CEILING	1	281
IN	1478	Wayne Valley-High	Classroom 201	2	4L4' T12 EE/EEMAG-8'	3	0.4	2L4' T8 28w/ELEE HI/NEW-8'	3	0.2	2,840	OCC SENSOR CEILING	1	164
IN	1479	Wayne Valley-High	Classroom 201	2	2L4' T12 EE/EEMAG	3	0.2	1L4' T8 28w/ELEE HI/NEW	3	0.1	2,840	INCLUDED ABOVE		84
IN	1480	Wayne Valley-High	Classroom 200	2	4L4' T12 EE/EEMAG-8'	4	0.6	2L4' T8 28w/ELEE HI/NEW-8'	4	0.3	2,840	OCC SENSOR CEILING	1	218

In or Out	Line	Building Name	Location	Fl	Pre Fixture Description	Pre Qty	Pre kW	Post Fixture Description	Post Qty	Post kW	Annual Hours	*Control Description*	*Control Qty*	Control kWH Saved
IN	1481	Wayne Valley-High	Classroom 200	2	2L4' T12 EE/EEMAG	4	0.3	1L4' T8 28w/ELEE HI/NEW	4	0.1	2,840	INCLUDED ABOVE		112
IN	1482	Wayne Valley-High	Stair 1	s	1L4' T12 EE/EEMAG	4	0.2	1L4' T8 28w/ELEE HI/NEW	4	0.1	3,640	NO RETRO		
IN	1483	Wayne Valley-High	Hall Stair 1 To Stair 2	1	2L4' T12 U EE/EEMAG	12	0.8	2L2' T8 15w/ELEE HI/RFL	12	0.4	3,640	NO RETRO		
IN	1484	Wayne Valley-High	Office Open 124	1	4L4' T12 EE/EEMAG-8'	3	0.4	2L4' T8 28w/ELEE HI/NEW-8'	3	0.2	3,440	OCC SENSOR CEILING	1	198
IN	1485	Wayne Valley-High	Office Open 124	1	2L4' T12 EE/EEMAG	3	0.2	1L4' T8 28w/ELEE HI/NEW	3	0.1	3,440	INCLUDED ABOVE		102
IN	1486	Wayne Valley-High	Office 124A	1	2L4' T12 EE/EEMAG	2	0.1	1L4' T8 28w/ELEE HI/NEW	2	0.1	2,840	OCC SENSOR WALLSWITCH	1	56
IN	1487	Wayne Valley-High	Office 124B	1	2L4' T12 EE/EEMAG	2	0.1	1L4' T8 28w/ELEE HI/NEW	2	0.1	2,840	OCC SENSOR WALLSWITCH	1	56
IN	1488	Wayne Valley-High	Office 124C	1	2L4' T12 EE/EEMAG	2	0.1	1L4' T8 28w/ELEE HI/NEW	2	0.1	2,840	OCC SENSOR WALLSWITCH	1	56
IN	1489	Wayne Valley-High	Office 124D	1	2L4' T12 EE/EEMAG	2	0.1	1L4' T8 28w/ELEE HI/NEW	2	0.1	2,840	OCC SENSOR WALLSWITCH	1	56
IN	1490	Wayne Valley-High	Storage By Main Office	1	2L4' T12 EE/EEMAG	1	0.1	1L4' T8 28w/ELEE HI/NEW	1	0.0	500	NO RETRO		
IN	1491	Wayne Valley-High	Office Principal	1	3L4' T12 EE/EEMAG	4	0.4	3L4' T8 28w/ELEE LO	4	0.3	2,840	OCC SENSOR CEILING	1	215
IN	1492	Wayne Valley-High	Office Principal	1	23W COMPACT HARDWIF	2	0.0	NO RETRO		0.0	2,840	INCLUDED ABOVE		41
IN	1493	Wayne Valley-High	Hall To Principals Bath	1	2L4' T12 EE/EEMAG	1	0.1	1L4' T8 28w/ELEE HI/NEW	1	0.0	3,640	OCC SENSOR WALLSWITCH	1	36
IN	1494	Wayne Valley-High	Bath Principal	1	2L4' T12 EE/EEMAG	1	0.1	1L4' T8 28w/ELEE HI/NEW	1	0.0	3,640	OCC SENSOR WALLSWITCH	1	36
IN	1495	Wayne Valley-High	Office Open Main	1	4L4' T12 EE/EEMAG	11	1.5	2L4' T8 28w/ELEE HI/RFL	11	0.7	3,440	NO RETRO		
IN	1496	Wayne Valley-High	Office Open Main	1	2L4' T8 U/EL	2	0.1	2L2' T8 15w/ELEE HI/RFL	2	0.1	3,440	NO RETRO		
IN	1497	Wayne Valley-High	Closet Telephone	1	1L4' T12 EE/EEMAG	1	0.0	1L4' T8 28w/ELEE HI/NEW	1	0.0	500	OCC SENSOR WALLSWITCH	1	5
IN	1498	Wayne Valley-High	Office 119	1	4L4' T12 EE/EEMAG	4	0.6	2L4' T8 28w/ELEE HI/RFL	4	0.3	2,840	OCC SENSOR WALLSWITCH	1	218
IN	1499	Wayne Valley-High	Storage Vault	1	100W INCANDESCENT	1	0.1	23W COMPACT SI/29712/CF23I	1	0.0	500	TIMER WALLSWITCH 1GANG	1	3
IN	1500	Wayne Valley-High	Bath Ladies	1	2L4' T8 32w/EL	1	0.1	1L4' T8 28w/ELEE HI/NEW	1	0.0	3,640	OCC SENSOR WALLSWITCH	1	36
IN	1501	Wayne Valley-High	Storage Copy	1	4L4' T12 EE/EEMAG	1	0.1	2L4' T8 28w/ELEE HI/RFL	1	0.1	2,440	OCC SENSOR WALLSWITCH	1	47
IN	1502	Wayne Valley-High	Office Open Guidance	1	4L4' T12 EE/EEMAG	12	1.7	2L4' T8 28w/ELEE HI/RFL	12	0.8	3,440	OCC SENSOR CEILING	2	793
IN	1503	Wayne Valley-High	Office 1	1	2L4' T12 EE/EEMAG	2	0.1	2L4' T8 28w/ELEE HI	2	0.1	2,840	#N/A	#N/A	#N/A
IN	1504	Wayne Valley-High	Office 2	1	2L4' T12 EE/EEMAG	2	0.1	2L4' T8 28w/ELEE HI	2	0.1	2,840	#N/A	#N/A	#N/A
IN	1505	Wayne Valley-High	Office 3	1	2L4' T12 EE/EEMAG	2	0.1	2L4' T8 28w/ELEE HI	2	0.1	2,840	#N/A	#N/A	#N/A
IN	1506	Wayne Valley-High	Office 4	1	2L4' T12 EE/EEMAG	3	0.2	2L4' T8 28w/ELEE HI	3	0.2	2,840	#N/A	#N/A	#N/A
IN	1507	Wayne Valley-High	Office 5	1	2L4' T12 EE/EEMAG	2	0.1	2L4' T8 28w/ELEE HI	2	0.1	2,840	#N/A	#N/A	#N/A
IN	1508	Wayne Valley-High	Office 6	1	2L4' T12 EE/EEMAG	2	0.1	2L4' T8 28w/ELEE HI	2	0.1	2,840	#N/A	#N/A	#N/A
IN	1509	Wayne Valley-High	Office 7	1	2L4' T12 EE/EEMAG	2	0.1	2L4' T8 28w/ELEE HI	2	0.1	2,840	OCC SENSOR WALLSWITCH	1	109
IN	1510	Wayne Valley-High	Conference Principal	1	4L4' T12 EE/EEMAG	9	1.3	2L4' T8 28w/ELEE HI/RFL	9	0.6	2,840	OCC SENSOR CEILING	1	491
IN	1511	Wayne Valley-High	Storage By Principal Conference	1	32W COMPACT SCREWIN	3	0.1	NO RETRO		0.1	500	TIMER WALLSWITCH 1GANG	1	14
IN	1512	Wayne Valley-High	Classroom 122 Iss	1	4L4' T12 EE/EEMAG-8'	6	0.8	2L4' T8 28w/ELEE HI/NEW-8'	6	0.4	2,840	OCC SENSOR CEILING	1	327
IN	1513	Wayne Valley-High	Classroom 122 Iss	1	2L4' T12 EE/EEMAG	3	0.2	1L4' T8 28w/ELEE HI/NEW	3	0.1	2,840	INCLUDED ABOVE		84
IN	1514	Wayne Valley-High	Office Open 120	1	3L4' T8 32w/EL	3	0.3	3L4' T8 28w/ELEE LO (1L&2L BA	3	0.2	2,408	ALREADY EXISTS		
IN	1515	Wayne Valley-High	Office 120A	1	3L4' T8 32w/EL	3	0.3	3L4' T8 28w/ELEE LO (1L&2L BA	3	0.2	1,988	ALREADY EXISTS		
IN	1516	Wayne Valley-High	Office 120B	1	4L4' T8 32w/EL	4	0.4	4L4' T8 28w/ELEE LO (2Lx2 BAL	4	0.3	2,840	OCC SENSOR CEILING	1	286
IN	1517	Wayne Valley-High	Lounge 118	1	4L4' T12 EE/EEMAG-8'	4	0.6	2L4' T8 28w/ELEE HI/NEW-8'	4	0.3	2,520	OCC SENSOR CEILING	1	194
IN	1518	Wayne Valley-High	Lounge 118	1	2L4' T12 EE/EEMAG	4	0.3	1L4' T8 28w/ELEE HI/NEW	4	0.1	2,520	INCLUDED ABOVE		100
IN	1519	Wayne Valley-High	Storage 116Sc	1	2L4' T12 EE/EEMAG	1	0.1	1L4' T8 28w/ELEE HI/NEW	1	0.0	500	NO RETRO		
IN	1520	Wayne Valley-High	Bath 116Bt	1	3L4' T8 32w/EL	3	0.3	3L4' T8 28w/ELEE LO	3	0.2	3,640	NO RETRO		

In or Out	Line	Building Name	Location	Fl	Pre Fixture Description	Pre Qty	Pre kW	Post Fixture Description	Post Qty	Post kW	Annual Hours	*Control Description*	*Control Qty*	Control kWH Saved
IN	1521	Wayne Valley-High	Storage 116Bt	1	2L4' T12 EE/EEMAG	1	0.1	1L4' T8 28w/ELEE HI/NEW	1	0.0	500	NO RETRO		
IN	1522	Wayne Valley-High	Closet 116Jc	1	2L4' T12 EE/EEMAG	2	0.1	1L4' T8 28w/ELEE HI/NEW	2	0.1	500	NO RETRO		
IN	1523	Wayne Valley-High	Lobby Main	1	3L4' T8 32w/EL	9	0.8	3L4' T8 28w/ELEE LO	9	0.6	3,640	NO RETRO		
IN	1524	Wayne Valley-High	Lobby Main	1	2L4' T12 U EE/EEMAG	2	0.1	2L2' T8 15w/ELEE HI/RFL	2	0.1	3,640	NO RETRO		
IN	1525	Wayne Valley-High	Lobby Display Case	1	1L4' T12 EE/EEMAG	1	0.0	1L4' T8 28w/ELEE LO	1	0.0	3,640	NO RETRO		
IN	1526	Wayne Valley-High	Stage	1	300W INCANDESCENT	8	2.4	2L4' T8 28w/ELEE/NEW	8	0.4	3,240	NO RETRO		
IN	1527	Wayne Valley-High	Auditorium Seating Area	1	2L4' T12 EE/EEMAG-8'	14	1.0	2L4' T8 28w/ELEE LO/STRIP KI	14	0.6	3,240	NO RETRO		
IN	1528	Wayne Valley-High	Auditorium Seating Area	1	1L4' T12 EE/EEMAG	2	0.1	1L4' T8 28w/ELEE LO/STRIP KI	2	0.0	3,240	NO RETRO		
IN	1529	Wayne Valley-High	Auditorium Seating Area	1	250W METAL HALIDE	35	10.3	22 WATT LED/KIT	35	0.8	3,240	NO RETRO		
IN	1530	Wayne Valley-High	Auditorium Seating Area	1	150W INCANDESCENT	33	5.0	21 WATT LED SI/LED21Par38/D	33	0.7	3,240	NO RETRO		
IN	1531	Wayne Valley-High	Bath 116Gt	1	3L4' T8 32w/EL	2	0.2	3L4' T8 28w/ELEE LO	2	0.1	3,640	OCC SENSOR CEIL DT 1GAN	1	138
IN	1532	Wayne Valley-High	Closet Clean	1	100W INCANDESCENT	1	0.1	23W COMPACT SI/29712/CF23I	1	0.0	500	OCC SENSOR WALLSWITCH	1	3
IN	1533	Wayne Valley-High	Hall Auditorium To 100	1	2L4' T12 U EE/EEMAG	21	1.5	2L2' T8 15w/ELEE HI/RFL	21	0.7	3,640	NO RETRO		
IN	1534	Wayne Valley-High	Hall Auditorium To 100	1	2L4' T12 EE/EEMAG	7	0.5	1L4' T8 28w/ELEE HI/NEW	7	0.2	3,640	INCLUDED ABOVE		252
IN	1535	Wayne Valley-High	Hall Auditorium To 100	1	2L4' T12 EE/EEMAG	5	0.4	1L4' T8 28w/ELEE HI/NEW	5	0.2	3,640	NO RETRO		
IN	1536	Wayne Valley-High	Hall Display Cases	1	2L3' T8 25w/EL	4	0.2	2L3' T8 21w/ELEE/NEW-6'	4	0.2	3,640	NO RETRO		
IN	1537	Wayne Valley-High	Hall Vestibule	1	100W INCANDESCENT	1	0.1	23W COMPACT SI/29712/CF23I	1	0.0	3,640	NO RETRO		
IN	1538	Wayne Valley-High	Cafeteria Seating Area	1	4L4' T12 EE/EEMAG	29	4.1	2L4' T8 28w/ELEE HI/NEW	29	1.9	3,440	NO RETRO		
IN	1539	Wayne Valley-High	Storage Tables	1	4L4' T12 EE/EEMAG	4	0.6	2L4' T8 28w/ELEE HI/NEW	4	0.3	500	NO RETRO		
IN	1540	Wayne Valley-High	Classroom 109	1	4L4' T12 EE/EEMAG-8'	9	1.3	2L4' T8 28w/ELEE HI/NEW-8'	9	0.6	2,840	NO RETRO		
IN	1541	Wayne Valley-High	Classroom 107 Tv Studio	1	2L4' T12 U EE/EEMAG	16	1.1	2L2' T8 15w/ELEE HI/RFL	16	0.5	2,840	OCC SENSOR CEILING	2	450
IN	1542	Wayne Valley-High	Office 107 Tv Studio	1	2L4' T12 U EE/EEMAG	6	0.4	2L2' T8 15w/ELEE HI/RFL	6	0.2	2,840	OCC SENSOR CEILING	1	169
IN	1543	Wayne Valley-High	Office 107 Tv Studio	1	2L4' T12 U EE/EEMAG	6	0.4	2L2' T8 15w/ELEE HI/RFL	6	0.2	2,840	OCC SENSOR CEILING	1	169
IN	1544	Wayne Valley-High	Storage 107 Tv Studio	1	2L4' T12 EE/EEMAG	8	0.6	1L4' T8 28w/ELEE HI/NEW	8	0.3	500	OCC SENSOR CEILING	4	40
IN	1545	Wayne Valley-High	Bath Men	1	2L4' T12 EE/EEMAG	1	0.1	1L4' T8 28w/ELEE HI/NEW	1	0.0	3,640	#N/A	#N/A	#N/A
IN	1546	Wayne Valley-High	Classroom 110	1	2L4' T8 32w/EL	1	0.1	1L4' T8 28w/ELEE HI/NEW	1	0.0	2,840	OCC SENSOR WALLSWITCH	1	28
IN	1547	Wayne Valley-High	Classroom 110	1	4L4' T12 EE/EEMAG-8'	12	1.7	2L4' T8 28w/ELEE HI/NEW-8'	12	0.8	2,840	NO RETRO		
IN	1548	Wayne Valley-High	Classroom 110	1	2L4' T12 EE/EEMAG	4	0.3	1L4' T8 28w/ELEE HI/NEW	4	0.1	2,840	NO RETRO		
IN	1549	Wayne Valley-High	Storage 110	1	2L4' T8 32w/EL	1	0.1	1L4' T8 28w/ELEE HI/NEW	1	0.0	500	NO RETRO		
IN	1550	Wayne Valley-High	Storage Practice 1	1	2L4' T8 32w/EL	1	0.1	1L4' T8 28w/ELEE HI/NEW	1	0.0	500	NO RETRO		
IN	1551	Wayne Valley-High	Storage Practice 2	1	2L4' T8 32w/EL	1	0.1	1L4' T8 28w/ELEE HI/NEW	1	0.0	500	NO RETRO		
IN	1552	Wayne Valley-High	Storage Behind Stage	1	2L4' T12 EE/EEMAG	1	0.1	1L4' T8 28w/ELEE HI/NEW	1	0.0	500	NO RETRO		
IN	1553	Wayne Valley-High	Office Music	1	2L4' T12 EE/EEMAG	3	0.2	1L4' T8 28w/ELEE HI/NEW	3	0.1	2,840	NO RETRO		
IN	1554	Wayne Valley-High	Storage Instruments	1	4L4' T12 EE/EEMAG-8'	1	0.1	2L4' T8 28w/ELEE HI/NEW-8'	1	0.1	2,440	NO RETRO		
IN	1555	Wayne Valley-High	Storage Instruments	1	2L4' T12 EE/EEMAG	1	0.1	1L4' T8 28w/ELEE HI/NEW	1	0.0	2,440	NO RETRO		
IN	1556	Wayne Valley-High	Classroom 108	1	3L4' T12 EE/EEMAG	12	1.3	2L4' T8 28w/ELEE HI/RFL	12	0.8	2,840	OCC SENSOR CEILING	1	654
IN	1557	Wayne Valley-High	Classroom 106	1	4L4' T12 EE/EEMAG-8'	9	1.3	2L4' T8 28w/ELEE HI/NEW-8'	9	0.6	2,840	OCC SENSOR CEILING	1	491
IN	1558	Wayne Valley-High	Classroom 106	1	2L4' T12 EE/EEMAG	9	0.6	1L4' T8 28w/ELEE HI/NEW	9	0.3	2,840	INCLUDED ABOVE		253
IN	1559	Wayne Valley-High	Office 106	1	2L4' T12 EE/EEMAG	3	0.2	1L4' T8 28w/ELEE HI/NEW	3	0.1	2,840	OCC SENSOR WALLSWITCH	1	84
IN	1560	Wayne Valley-High	Storage 106	1	2L4' T12 EE/EEMAG	3	0.2	1L4' T8 28w/ELEE HI/NEW	3	0.1	500	OCC SENSOR WALLSWITCH	1	15

In or Out	Line	Building Name	Location	Fl	Pre Fixture Description	Pre Qty	Pre kW	Post Fixture Description	Post Qty	Post kW	Annual Hours	*Control Description*	*Control Qty*	Control kWH Saved
IN	1561	Wayne Valley-High	Bath Women	1	2L4' T8 32w/EL	2	0.1	1L4' T8 28w/ELEE HI/NEW	2	0.1	3,640	OCC SENSOR WALLSWITCH	1	72
IN	1562	Wayne Valley-High	Classroom 157	1	4L4' T12 EE/EEMAG-8'	6	0.8	2L4' T8 28w/ELEE HI/NEW-8'	6	0.4	2,840	OCC SENSOR CEILING	1	327
IN	1563	Wayne Valley-High	Classroom 157	1	2L4' T12 EE/EEMAG	6	0.4	1L4' T8 28w/ELEE HI/NEW	6	0.2	2,840	INCLUDED ABOVE		169
IN	1564	Wayne Valley-High	Storage 157	1	2L4' T12 EE/EEMAG	4	0.3	1L4' T8 28w/ELEE HI/NEW	4	0.1	500	OCC SENSOR WALLSWITCH	1	20
IN	1565	Wayne Valley-High	Classroom 104	1	6L4' T8 32w/EL-8'	15	2.7	6L4' T8 28w/ELEE LO-8'	15	1.9	2,840	OCC SENSOR CEILING	1	1,610
IN	1566	Wayne Valley-High	Classroom 104	1	3L4' T8 32w/EL	3	0.3	3L4' T8 28w/ELEE LO	3	0.2	2,840	INCLUDED ABOVE		161
IN	1567	Wayne Valley-High	Conference 104	1	60W INCANDESCENT	4	0.2	20 WATT LED/NEW	4	0.1	2,840	NO RETRO		
IN	1568	Wayne Valley-High	Storage Camera Equipment	1	150W INCANDESCENT	2	0.3	23W COMPACT SI/29712/CF23I	2	0.0	500	OCC SENSOR WALLSWITCH	1	7
IN	1569	Wayne Valley-High	Office 103	1	4L4' T12 EE/EEMAG-8'	5	0.7	2L4' T8 28w/ELEE HI/NEW-8'	5	0.3	2,840	OCC SENSOR CEILING	1	273
IN	1570	Wayne Valley-High	Storage 103	1	4L4' T12 EE/EEMAG-8'	2	0.3	2L4' T8 28w/ELEE HI/NEW-8'	2	0.1	500	OCC SENSOR WALLSWITCH	1	19
IN	1571	Wayne Valley-High	Storage 103	1	2L4' T12 EE/EEMAG	2	0.1	1L4' T8 28w/ELEE HI/NEW	2	0.1	500	INCLUDED ABOVE		10
IN	1572	Wayne Valley-High	Classroom 102	1	4L4' T12 EE/EEMAG-8'	14	2.0	2L4' T8 28w/ELEE HI/NEW-8'	14	0.9	2,840	OCC SENSOR CEILING	1	763
IN	1573	Wayne Valley-High	Classroom 102	1	2L4' T12 EE/EEMAG	3	0.2	1L4' T8 28w/ELEE HI/NEW	3	0.1	2,840	INCLUDED ABOVE		84
IN	1574	Wayne Valley-High	Storage 102	1	4L4' T8 32w/EL	1	0.1	2L4' T8 28w/ELEE HI/NEW	1	0.1	500	TIMER WALLSWITCH 1GANG	1	10
IN	1575	Wayne Valley-High	Storage 102	1	4L4' T8 32w/EL	1	0.1	2L4' T8 28w/ELEE HI/NEW	1	0.1	500	OCC SENSOR WALLSWITCH	1	10
IN	1576	Wayne Valley-High	Classroom 100	1	4L4' T8 32w/EL-8'	17	1.9	2L4' T8 28w/ELEE HI/NEW-8'	17	1.1	2,840	NO RETRO		
IN	1577	Wayne Valley-High	Classroom 100	1	2L4' T8 32w/EL	1	0.1	1L4' T8 28w/ELEE HI/NEW	1	0.0	2,840	NO RETRO		
IN	1578	Wayne Valley-High	Office 100	1	4L4' T8 32w/EL-8'	1	0.1	2L4' T8 28w/ELEE HI/NEW-8'	1	0.1	2,840	OCC SENSOR WALLSWITCH	1	55
IN	1579	Wayne Valley-High	Office Open 161 It	1	4L4' T12 EE/EEMAG-8'	9	1.3	2L4' T8 28w/ELEE HI/NEW-8'	9	0.6	3,440	OCC SENSOR CEILING	1	594
IN	1580	Wayne Valley-High	Hall 116 To Stair 3	1	2L4' T12 U EE/EEMAG	9	0.6	2L2' T8 15w/ELEE HI/RFL	9	0.3	3,640	NO RETRO		
IN	1581	Wayne Valley-High	Hall 116 To Stair 3	1	2L4' T12 U EE/EEMAG	1	0.1	2L2' T8 15w/ELEE HI/RFL	1	0.0	3,640	NO RETRO		
IN	1582	Wayne Valley-High	Hall Display Case	1	1L4' T12 EE/EEMAG	6	0.2	1L4' T8 28w/ELEE LO/STRIP KI	6	0.1	3,640	NO RETRO		
IN	1583	Wayne Valley-High	Bath 116 Tr	1	2L4' T8 32w/EL	1	0.1	2L4' T8 28w/ELEE LO	1	0.0	3,640	OCC SENSOR WALLSWITCH	1	46
IN	1584	Wayne Valley-High	Classroom 116	1	4L4' T8 32w/EL	19	2.1	2L4' T8 28w/ELEE HI/RFL	19	1.2	2,840	OCC SENSOR CEILING	1	1,036
IN	1585	Wayne Valley-High	Bath 116T	1	4L4' T8 32w/EL	1	0.1	2L4' T8 28w/ELEE HI/RFL	1	0.1	3,640	OCC SENSOR WALLSWITCH	1	70
IN	1586	Wayne Valley-High	Storage 113Sc	1	2L4' T12 EE/EEMAG	2	0.1	1L4' T8 28w/ELEE HI/NEW	2	0.1	500	OCC SENSOR WALLSWITCH	1	10
IN	1587	Wayne Valley-High	Classroom 114	1	4L4' T12 EE/EEMAG-8'	18	2.5	2L4' T8 28w/ELEE HI/NEW-8'	18	1.2	2,840	OCC SENSOR CEILING	1	982
IN	1588	Wayne Valley-High	Kitchen Serv Ing Line	1	4L4' T8 32w/EL-8'	4	0.4	4L4' T8 28w/ELEE LO/NEW-8'	4	0.3	2,840	NO RETRO		
IN	1589	Wayne Valley-High	Kitchen Serv Ing Line	1	2L4' T8 32w/EL	6	0.4	2L4' T8 28w/ELEE LO/NEW	6	0.3	2,840	NO RETRO		
IN	1590	Wayne Valley-High	Kitchen Prep Area	1	4L4' T12 EE/EEMAG	26	3.6	4L4' T8 28w/ELEE LO	26	2.2	2,840	NO RETRO		
IN	1591	Wayne Valley-High	Kitchen Prep Area	1	2x13W COMPACT HARDV	1	0.0	NO RETRO		0.0	2,840	NO RETRO		
IN	1592	Wayne Valley-High	Kitchen Grease Hood	1	100W INCANDESCENT	8	0.8	23W COMPACT SI/29712/CF23I	8	0.2	2,840	NO RETRO		
IN	1593	Wayne Valley-High	Closet Clean	1	32W COMPACT SCREWIN	1	0.0	NO RETRO		0.0	500	NO RETRO		
IN	1594	Wayne Valley-High	Kitchen Staff Serv Ing	1	4L4' T12 EE/EEMAG	2	0.3	4L4' T8 28w/ELEE LO	2	0.2	2,840	OCC SENSOR CEILING	1	141
IN	1595	Wayne Valley-High	Storage Dry Goods	1	4L4' T12 EE/EEMAG	2	0.3	2L4' T8 28w/ELEE HI/RFL	2	0.1	2,440	TIMER WALLSWITCH 1GANG	1	94
IN	1596	Wayne Valley-High	Office Kitchen	1	4L4' T8 32w/EL	2	0.2	2L4' T8 28w/ELEE HI/RFL	2	0.1	2,840	OCC SENSOR WALLSWITCH	1	109
IN	1597	Wayne Valley-High	Cafeteria Se4Ating Area	1	4L4' T12 EE/EEMAG	12	1.7	2L4' T8 28w/ELEE HI/NEW	12	0.8	3,440	OCC SENSOR CEILING	1	793
IN	1598	Wayne Valley-High	Hall Stair 3 To Office 126	1	2L4' T8 32w/EL	13	0.8	2L4' T8 28w/ELEE LO	13	0.5	3,640	NO RETRO		
IN	1599	Wayne Valley-High	Hall Stair 3 To Office 126	1	1L4' T12 EE/EEMAG	1	0.0	1L4' T8 28w/ELEE HI/NEW	1	0.0	3,640	NO RETRO		
IN	1600	Wayne Valley-High	Hall Stair 3 To Office 126	1	2L4' T12 U EE/EEMAG	1	0.1	2L2' T8 15w/ELEE HI/RFL	1	0.0	3,640	NO RETRO		

In or Out	Line	Building Name	Location	Fl	Pre Fixture Description	Pre Qty	Pre kW	Post Fixture Description	Post Qty	Post kW	Annual Hours	*Control Description*	*Control Qty*	Control kWH Saved
IN	1601	Wayne Valley-High	Office 126 Ao	1	4L4' T12 EE/EEMAG-8'	4	0.6	2L4' T8 28w/ELEE HI/NEW-8'	4	0.3	2,840	NO RETRO		
IN	1602	Wayne Valley-High	Office 126 Ao	1	2L4' T12 EE/EEMAG	2	0.1	1L4' T8 28w/ELEE HI/NEW	2	0.1	2,840	NO RETRO		
IN	1603	Wayne Valley-High	Storage 126 Ao	1	2L4' T12 EE/EEMAG	1	0.1	1L4' T8 28w/ELEE HI/NEW	1	0.0	2,440	NO RETRO		
IN	1604	Wayne Valley-High	Storage 126 Ao	1	4L4' T12 EE/EEMAG-8'	1	0.1	2L4' T8 28w/ELEE HI/NEW-8'	1	0.1	2,440	NO RETRO		
IN	1605	Wayne Valley-High	Storage 126 Ao	1	4L4' T12 EE/EEMAG	1	0.1	2L4' T8 28w/ELEE HI/RFL	1	0.1	2,440	NO RETRO		
IN	1606	Wayne Valley-High	Hall By Drink Machine	1	2L4' T8 32w/EL	1	0.1	1L4' T8 28w/ELEE HI/NEW	1	0.0	3,640	OCC SENSOR WALLSWITCH	1	36
IN	1607	Wayne Valley-High	Hall By Drink Machine	1	1L2' T8 17w/EL	2	0.0	1L2' T8 15w/ELEE/STRIP KIT	2	0.0	3,640	NO RETRO		
IN	1608	Wayne Valley-High	Bath Staff	1	1L4' T8 32w/EL	1	0.0	1L4' T8 28w/ELEE HI/NEW	1	0.0	3,640	OCC SENSOR WALLSWITCH	1	36
IN	1609	Wayne Valley-High	Bath Staff	1	2L4' T12 EE/EEMAG	1	0.1	1L4' T8 28w/ELEE HI/NEW	1	0.0	3,640	INCLUDED ABOVE		36
IN	1610	Wayne Valley-High	Closet Clean	1	150W INCANDESCENT	1	0.2	23W COMPACT SI/29712/CF23I	1	0.0	500	OCC SENSOR WALLSWITCH	1	3
IN	1611	Wayne Valley-High	Storage Climbing Gear	1	32W COMPACT SCREWIN	1	0.0	NO RETRO		0.0	500	OCC SENSOR WALLSWITCH	1	5
IN	1612	Wayne Valley-High	Gym Small	1	400W METAL HALIDE	40	18.2	222 WATT LED/NEW	40	8.9	3,440	OCC. SENSOR ON HI BAY FI	40	9,164
IN	1613	Wayne Valley-High	Locker 127	1	32W COMPACT SCREWIN	1	0.0	1L4' T8 28w/ELEE HI/NEW	1	0.0	3,640	OCC SENSOR WALLSWITCH	1	36
IN	1614	Wayne Valley-High	Office Coach	1	2L4' T8 32w/EL	2	0.1	1L4' T8 28w/ELEE HI/NEW	2	0.1	2,840	OCC SENSOR WALLSWITCH	1	56
IN	1615	Wayne Valley-High	Bath Coach	1	2L2' T8 17w/EL	1	0.0	2L2' T8 15w/ELEE LO/NEW	1	0.0	3,640	OCC SENSOR WALLSWITCH	1	26
IN	1616	Wayne Valley-High	Bath Coach	1	2L4' T12 EE/EEMAG	1	0.1	1L4' T8 28w/ELEE HI/NEW	1	0.0	3,640	INCLUDED ABOVE		36
IN	1617	Wayne Valley-High	Storage Coach	1	60W INCANDESCENT	1	0.1	23W COMPACT SI/29712/CF23I	1	0.0	500	NO RETRO		
IN	1618	Wayne Valley-High	Storage A	1	2L4' T8 32w/EL	2	0.1	1L4' T8 28w/ELEE HI/NEW	2	0.1	500	NO RETRO		
IN	1619	Wayne Valley-High	Locker Boys	1	1L4' T12 EE/EEMAG	16	0.6	1L4' T8 28w/ELEE HI/NEW	16	0.5	3,640	NO RETRO		
IN	1620	Wayne Valley-High	Locker Shower	1	100W INCANDESCENT	3	0.3	23W COMPACT SI/29712/CF23I	3	0.1	3,640	NO RETRO		
IN	1621	Wayne Valley-High	Hall By Shower	1	1L4' T12 EE/EEMAG	1	0.0	1L4' T8 28w/ELEE HI/NEW	1	0.0	3,640	NO RETRO		
IN	1622	Wayne Valley-High	Closet Clean	1	300W INCANDESCENT	1	0.3	2L2' T8 15w/ELEE LO/NEW	1	0.0	500	OCC SENSOR WALLSWITCH	1	4
IN	1623	Wayne Valley-High	Bath Clean	1	2L4' T12 EE/EEMAG	1	0.1	1L4' T8 28w/ELEE HI/NEW	1	0.0	3,640	NO RETRO		
IN	1624	Wayne Valley-High	Bath Clean	1	1L4' T12 EE/EEMAG	1	0.0	1L4' T8 28w/ELEE HI/NEW	1	0.0	3,640	NO RETRO		
IN	1625	Wayne Valley-High	Storage Punching Bags	1	150W INCANDESCENT	1	0.2	2L2' T8 15w/ELEE LO/NEW	1	0.0	500	NO RETRO		
IN	1626	Wayne Valley-High	Storage Equipment	1	100W INCANDESCENT	2	0.2	23W COMPACT SI/29712/CF23I	2	0.0	500	TIMER WALLSWITCH 1GANG	1	7
IN	1627	Wayne Valley-High	Storage Supplies 1	1	100W INCANDESCENT	2	0.2	23W COMPACT SI/29712/CF23I	2	0.0	500	NO RETRO		
IN	1628	Wayne Valley-High	Storage Supplies 2	1	100W INCANDESCENT	2	0.2	23W COMPACT SI/29712/CF23I	2	0.0	500	NO RETRO		
IN	1629	Wayne Valley-High	Storage Supplies 3	1	100W INCANDESCENT	2	0.2	23W COMPACT SI/29712/CF23I	2	0.0	500	NO RETRO		
IN	1630	Wayne Valley-High	Closet Clean	1	300W INCANDESCENT	1	0.3	2L2' T8 15w/ELEE LO/NEW	1	0.0	500	NO RETRO		
IN	1631	Wayne Valley-High	Hall Locker Girls	1	1L4' T12 EE/EEMAG	8	0.3	1L4' T8 28w/ELEE HI/NEW	8	0.3	3,640	NO RETRO		
IN	1632	Wayne Valley-High	Hall 125 Girls	1	32W COMPACT SCREWIN	1	0.0	1L4' T8 28w/ELEE HI/NEW	1	0.0	3,640	OCC SENSOR WALLSWITCH	1	36
IN	1633	Wayne Valley-High	Office Coach	1	1L4' T12 EE/EEMAG	1	0.0	1L4' T8 28w/ELEE HI/NEW	1	0.0	2,840	OCC SENSOR WALLSWITCH	1	28
IN	1634	Wayne Valley-High	Bath Coach	1	2L4' T12 EE/EEMAG	1	0.1	1L4' T8 28w/ELEE HI/NEW	1	0.0	3,640	OCC SENSOR WALLSWITCH	1	36
IN	1635	Wayne Valley-High	Bath Coach	1	2L2' T8 17w/EL	1	0.0	2L2' T8 15w/ELEE LO/NEW	1	0.0	3,640	INCLUDED ABOVE		26
IN	1636	Wayne Valley-High	Storage Equipment	1	100W INCANDESCENT	1	0.1	23W COMPACT SI/29712/CF23I	1	0.0	500	NO RETRO		
IN	1637	Wayne Valley-High	Locker 125 Girls	1	1L4' T12 EE/EEMAG	16	0.6	1L4' T8 28w/ELEE HI/NEW	16	0.5	3,640	NO RETRO		
IN	1638	Wayne Valley-High	Locker Shower	1	100W INCANDESCENT	8	0.8	23W COMPACT SI/29712/CF23I	8	0.2	3,640	NO RETRO		
IN	1639	Wayne Valley-High	Closet Clean	1	100W INCANDESCENT	1	0.1	23W COMPACT SI/29712/CF23I	1	0.0	500	OCC SENSOR WALLSWITCH	1	3
IN	1640	Wayne Valley-High	Bath Girls Locker	1	1L4' T12 EE/EEMAG	1	0.0	1L4' T8 28w/ELEE HI/NEW	1	0.0	3,640	NO RETRO		

In or Out	Line	Building Name	Location	Fl	Pre Fixture Description	Pre Qty	Pre kW	Post Fixture Description	Post Qty	Post kW	Annual Hours	*Control Description*	*Control Qty*	Control kWH Saved
IN	1641	Wayne Valley-High	Hall To Exit	1	150W INCANDESCENT	1	0.2	23W COMPACT SI/29712/CF23I	1	0.0	3,640	NO RETRO		
IN	1642	Wayne Valley-High	Storage Mats	1	150W INCANDESCENT	2	0.3	2L2' T8 15w/ELEE LO/NEW	2	0.0	500	TIMER WALLSWITCH 1GANG	1	7
IN	1643	Wayne Valley-High	Hall Stair 4	1	2L4' T12 EE/EEMAG-8'	8	0.6	2L4' T8 28w/ELEE LO/NEW-8'	8	0.3	3,640	NO RETRO		
IN	1644	Wayne Valley-High	Hall Stair 4	1	1L4' T12 EE/EEMAG	1	0.0	1L4' T8 28w/ELEE HI/NEW	1	0.0	3,640	NO RETRO		
IN	1645	Wayne Valley-High	Hall 125Gt To Auto Shop 130	1	1L4' T12 EE/EEMAG	34	1.4	1L4' T8 28w/ELEE HI/NEW	34	1.1	3,640	NO RETRO		
IN	1646	Wayne Valley-High	Hall Display Case	1	2L4' T12 EE/EEMAG	4	0.3	1L4' T8 28w/ELEE/STRIP KIT	4	0.1	3,640	NO RETRO		
IN	1647	Wayne Valley-High	Bath 125 Gt	1	2L4' T12 U EE/EEMAG	1	0.1	2L2' T8 15w/ELEE HI/RFL	1	0.0	3,640	NO RETRO		
IN	1648	Wayne Valley-High	Bath 125 Gt	1	2L4' T12 U EE/EEMAG	4	0.3	2L2' T8 15w/ELEE HI/RFL	4	0.1	3,640	OCC SENSOR CEIL DT 1GAN	1	144
IN	1649	Wayne Valley-High	Closet Clean	1	32W COMPACT SCREWIN	1	0.0	2L2' T8 15w/ELEE LO/NEW	1	0.0	500	OCC SENSOR WALLSWITCH	1	4
IN	1650	Wayne Valley-High	Bath 125Bt	1	2L4' T12 U EE/EEMAG	1	0.1	2L2' T8 15w/ELEE HI/RFL	1	0.0	3,640	NO RETRO		
IN	1651	Wayne Valley-High	Bath 125Bt	1	2L4' T12 U EE/EEMAG	4	0.3	2L2' T8 15w/ELEE HI/RFL	4	0.1	3,640	OCC SENSOR CEIL DT 1GAN	1	144
IN	1652	Wayne Valley-High	Office 125 Athletic Trainer	1	2L4' T12 EE/EEMAG	4	0.3	1L4' T8 28w/ELEE HI/NEW	4	0.1	2,840	OCC SENSOR CEILING	1	112
IN	1653	Wayne Valley-High	Office 125Bs	1	2L4' T12 EE/EEMAG	4	0.3	1L4' T8 28w/ELEE HI/NEW	4	0.1	2,840	OCC SENSOR CEILING	1	112
IN	1654	Wayne Valley-High	Storage Ceiling Tiles	1	4L4' T12 EE/EEMAG-8'	7	1.0	4L4' T8 28w/ELEE LO-8'	7	0.6	2,440	TIMER WALLSWITCH 1GANG	1	425
IN	1655	Wayne Valley-High	Gym Weight Room	1	4L4' T12 EE/EEMAG-8'	26	3.6	4L4' T8 28w/ELEE LO-8'	26	2.2	3,440	NO RETRO		
IN	1656	Wayne Valley-High	Gym Weight Room	1	2L4' T12 EE/EEMAG	5	0.4	2L4' T8 28w/ELEE LO	5	0.2	3,440	NO RETRO		
IN	1657	Wayne Valley-High	Storage Weight Room	1	4L4' T12 EE/EEMAG-8'	2	0.3	4L4' T8 28w/ELEE LO-8'	2	0.2	2,440	TIMER WALLSWITCH 1GANG	1	122
IN	1658	Wayne Valley-High	Shop 129	1	4L4' T12 EE/EEMAG-8'	28	3.9	4L4' T8 28w/ELEE LO-8'	28	2.3	2,440	NO RETRO		
IN	1659	Wayne Valley-High	Shop 129	1	2L4' T12 EE/EEMAG	9	0.6	2L4' T8 28w/ELEE LO	9	0.4	2,440	NO RETRO		
IN	1660	Wayne Valley-High	Storage Vapor Hood	1	23W COMPACT HARDWIF	2	0.0	NO RETRO		0.0	500	TIMER WALLSWITCH 1GANG	1	7
IN	1661	Wayne Valley-High	Storage Wood	1	4L4' T8 32w/EL	2	0.2	2L4' T8 28w/ELEE HI/RFL	2	0.1	500	NO RETRO		
IN	1662	Wayne Valley-High	Classroom 132	1	2L4' T8 U/EL	2	0.1	2L2' T8 15w/ELEE HI/RFL	2	0.1	2,840	NO RETRO		
IN	1663	Wayne Valley-High	Classroom 132	1	4L4' T8 32w/EL	11	1.2	2L4' T8 28w/ELEE HI/RFL	11	0.7	2,840	NO RETRO		
IN	1664	Wayne Valley-High	Storage 132	1	4L4' T8 32w/EL	2	0.2	2L4' T8 28w/ELEE HI/RFL	2	0.1	500	NO RETRO		
IN	1665	Wayne Valley-High	Bath 132Hr	1	4L4' T8 32w/EL	3	0.3	2L4' T8 28w/ELEE HI/RFL	3	0.2	3,640	OCC SENSOR WALLSWITCH	1	210
IN	1666	Wayne Valley-High	Shop 130 Auto	1	4L4' T12 EE/EEMAG-8'	5	0.7	4L4' T8 28w/ELEE LO/NEW-8'	5	0.4	2,440	NO RETRO		
IN	1667	Wayne Valley-High	Shop 130 Auto	1	2L4' T12 EE/EEMAG	4	0.3	2L4' T8 28w/ELEE LO	4	0.2	2,440	NO RETRO		
IN	1668	Wayne Valley-High	Storage Compressor	1	2L4' T12 EE/EEMAG-8'	3	0.2	2L4' T8 28w/ELEE LO/STRIP KI	3	0.1	500	NO RETRO		
IN	1669	Wayne Valley-High	Storage Compressor	1	1L4' T12 EE/EEMAG	1	0.0	1L4' T8 28w/ELEE LO/STRIP KI	1	0.0	500	NO RETRO		
IN	1670	Wayne Valley-High	Classroom 131	1	4L4' T12 EE/EEMAG-8'	6	0.8	2L4' T8 28w/ELEE HI/NEW-8'	6	0.4	2,840	OCC SENSOR CEILING	1	327
IN	1671	Wayne Valley-High	Classroom 131	1	2L4' T12 EE/EEMAG	3	0.2	1L4' T8 28w/ELEE HI/NEW	3	0.1	2,840	INCLUDED ABOVE		84
IN	1672	Wayne Valley-High	Hall By 130Hr	1	1L4' T12 EE/EEMAG	4	0.2	1L4' T8 28w/ELEE HI/NEW	4	0.1	3,640	NO RETRO		
IN	1673	Wayne Valley-High	Bath 130Hr	1	2L4' T12 EE/EEMAG-8'	1	0.1	2L4' T8 28w/ELEE LO/NEW-8'	1	0.0	3,640	OCC SENSOR WALLSWITCH	1	46
IN	1674	Wayne Valley-High	Bath 130Wt	1	2L4' T12 EE/EEMAG-8'	1	0.1	2L4' T8 28w/ELEE LO/NEW-8'	1	0.0	3,640	OCC SENSOR WALLSWITCH	1	46
IN	1675	Wayne Valley-High	Retail 130 School Store	1	4L4' T12 EE/EEMAG-8'	2	0.3	2L4' T8 28w/ELEE HI/NEW-8'	2	0.1	2,520	OCC SENSOR CEILING	1	97
IN	1676	Wayne Valley-High	Office 130 School Store	1	4L4' T12 EE/EEMAG-8'	2	0.3	2L4' T8 28w/ELEE HI/NEW-8'	2	0.1	2,840	OCC SENSOR WALLSWITCH	1	109
IN	1677	Wayne Valley-High	Storage 130 School Store	1	4L4' T12 EE/EEMAG-8'	2	0.3	2L4' T8 28w/ELEE HI/NEW-8'	2	0.1	500	OCC SENSOR WALLSWITCH	1	19
IN	1678	Wayne Valley-High	Lobby Gym	1	4L4' T12 EE/EEMAG-8'	8	1.1	4L4' T8 28w/ELEE LO-8'	8	0.7	3,640	DAYLIGHT HARVESTING SYS	8	1,208
IN	1679	Wayne Valley-High	Lobby Gym	1	2L4' T12 EE/EEMAG	8	0.6	2L4' T8 28w/ELEE LO	8	0.3	3,640	DAYLIGHT HARVESTING SYS	8	612
IN	1680	Wayne Valley-High	Lobby Gym	1	32W COMPACT SCREWIN	4	0.1	NO RETRO		0.1	3,640	NO RETRO		

In or Out	Line	Building Name	Location	Fl	Pre Fixture Description	Pre Qty	Pre kW	Post Fixture Description	Post Qty	Post kW	Annual Hours	*Control Description*	*Control Qty*	Control kWH Saved
IN	1681	Wayne Valley-High	Lobby Display Case	1	2L4' T12 EE/EEMAG	6	0.4	1L4' T8 28w/ELEE/STRIP KIT	6	0.1	3,640	NO RETRO		
IN	1682	Wayne Valley-High	Closet By Display Cases	1	100W INCANDESCENT	1	0.1	23W COMPACT SI/29712/CF23I	1	0.0	500	NO RETRO		
IN	1683	Wayne Valley-High	Closet By Display Cases	1	100W INCANDESCENT	1	0.1	23W COMPACT SI/29712/CF23I	1	0.0	500	NO RETRO		
IN	1684	Wayne Valley-High	Office Open 134	1	4L4' T12 EE/EEMAG-8'	6	0.8	2L4' T8 28w/ELEE HI/NEW-8'	6	0.4	3,440	OCC SENSOR CEILING	1	396
IN	1685	Wayne Valley-High	Office 134A	1	4L4' T12 EE/EEMAG-8'	2	0.3	2L4' T8 28w/ELEE HI/NEW-8'	2	0.1	2,840	OCC SENSOR CEILING	1	109
IN	1686	Wayne Valley-High	Office 134B	1	4L4' T12 EE/EEMAG-8'	2	0.3	2L4' T8 28w/ELEE HI/NEW-8'	2	0.1	2,840	OCC SENSOR CEILING	1	109
IN	1687	Wayne Valley-High	Office 134C	1	4L4' T12 EE/EEMAG-8'	2	0.3	2L4' T8 28w/ELEE HI/NEW-8'	2	0.1	2,840	OCC SENSOR CEILING	1	109
IN	1688	Wayne Valley-High	Office 134C	1	2L4' T12 EE/EEMAG	2	0.1	1L4' T8 28w/ELEE HI/NEW	2	0.1	2,840	INCLUDED ABOVE		56
IN	1689	Wayne Valley-High	Storage 134	1	2L4' T12 EE/EEMAG	1	0.1	1L4' T8 28w/ELEE HI/NEW	1	0.0	500	OCC SENSOR WALLSWITCH	1	5
IN	1690	Wayne Valley-High	Office Open 135	1	4L4' T12 EE/EEMAG-8'	3	0.4	2L4' T8 28w/ELEE HI/NEW-8'	3	0.2	3,440	OCC SENSOR CEILING	1	198
IN	1691	Wayne Valley-High	Office Open 135	1	2L4' T12 EE/EEMAG	3	0.2	1L4' T8 28w/ELEE HI/NEW	3	0.1	3,440	INCLUDED ABOVE		102
IN	1692	Wayne Valley-High	Office Open Exam Beds	1	2L4' T12 EE/EEMAG	6	0.4	1L4' T8 28w/ELEE HI/NEW	6	0.2	3,440	NO RETRO		
IN	1693	Wayne Valley-High	Office Nurse	1	4L4' T12 EE/EEMAG-8'	2	0.3	2L4' T8 28w/ELEE HI/NEW-8'	2	0.1	2,840	OCC SENSOR WALLSWITCH	1	109
IN	1694	Wayne Valley-High	Storage Nurse	1	300W INCANDESCENT	1	0.3	2L2' T8 15w/ELEE LO/NEW	1	0.0	500	NO RETRO		
IN	1695	Wayne Valley-High	Bath Nurse	1	2L4' T12 EE/EEMAG	1	0.1	2L4' T8 28w/ELEE HI/RFL	1	0.1	3,640	OCC SENSOR WALLSWITCH	1	70
IN	1696	Wayne Valley-High	Bath Nurse	1	2L2' T12 STD/STD	1	0.1	2L2' T8 15w/ELEE LO/NEW	1	0.0	3,640	INCLUDED ABOVE		26
IN	1697	Wayne Valley-High	Classroom 136	1	4L4' T12 EE/EEMAG-8'	8	1.1	2L4' T8 28w/ELEE HI/NEW-8'	8	0.5	2,840	OCC SENSOR CEILING	1	436
IN	1698	Wayne Valley-High	Classroom 137	1	4L4' T12 EE/EEMAG-8'	6	0.8	2L4' T8 28w/ELEE HI/NEW-8'	6	0.4	2,840	OCC SENSOR CEILING	1	327
IN	1699	Wayne Valley-High	Classroom 137	1	2L4' T12 EE/EEMAG	3	0.2	1L4' T8 28w/ELEE HI/NEW	3	0.1	2,840	INCLUDED ABOVE		84
IN	1700	Wayne Valley-High	Classroom 138	1	4L4' T12 EE/EEMAG-8'	6	0.8	2L4' T8 28w/ELEE HI/NEW-8'	6	0.4	2,840	OCC SENSOR CEILING	1	327
IN	1701	Wayne Valley-High	Classroom 138	1	2L4' T12 EE/EEMAG	3	0.2	1L4' T8 28w/ELEE HI/NEW	3	0.1	2,840	INCLUDED ABOVE		84
IN	1702	Wayne Valley-High	Classroom 139	1	4L4' T12 EE/EEMAG-8'	6	0.8	2L4' T8 28w/ELEE HI/NEW-8'	6	0.4	2,840	OCC SENSOR CEILING	1	327
IN	1703	Wayne Valley-High	Classroom 139	1	2L4' T12 EE/EEMAG	3	0.2	1L4' T8 28w/ELEE HI/NEW	3	0.1	2,840	INCLUDED ABOVE		84
IN	1704	Wayne Valley-High	Classroom 140	1	4L4' T12 EE/EEMAG-8'	6	0.8	2L4' T8 28w/ELEE HI/NEW-8'	6	0.4	2,840	OCC SENSOR CEILING	1	327
IN	1705	Wayne Valley-High	Classroom 140	1	2L4' T12 EE/EEMAG	3	0.2	1L4' T8 28w/ELEE HI/NEW	3	0.1	2,840	INCLUDED ABOVE		84
IN	1706	Wayne Valley-High	Hall 137 To Stair 5	1	1L4' T12 EE/EEMAG	30	1.2	1L4' T8 28w/ELEE HI/NEW	30	1.0	3,640	NO RETRO		
IN	1707	Wayne Valley-High	Hall 137 To Stair 5	1	2L4' T12 EE/EEMAG	2	0.1	1L4' T8 28w/ELEE/STRIP KIT	2	0.0	3,640	NO RETRO		
IN	1708	Wayne Valley-High	Classroom 140	1	4L4' T12 EE/EEMAG-8'	9	1.3	2L4' T8 28w/ELEE HI/NEW-8'	9	0.6	2,840	OCC SENSOR CEILING	1	491
IN	1709	Wayne Valley-High	Classroom 140	1	2L4' T12 EE/EEMAG	3	0.2	1L4' T8 28w/ELEE HI/NEW	3	0.1	2,840	INCLUDED ABOVE		84
IN	1710	Wayne Valley-High	Closet Clean	1	150W INCANDESCENT	1	0.2	2L2' T8 15w/ELEE LO/NEW	1	0.0	500	OCC SENSOR WALLSWITCH	1	4
IN	1711	Wayne Valley-High	Bath Girls	1	4L4' T8 32w/EL-8'	1	0.1	2L4' T8 28w/ELEE HI/NEW-8'	1	0.1	3,640	OCC SENSOR WALLSWITCH	1	70
IN	1712	Wayne Valley-High	Bath Girls	1	2L4' T8 32w/EL	1	0.1	1L4' T8 28w/ELEE HI/NEW	1	0.0	3,640	INCLUDED ABOVE		36
IN	1713	Wayne Valley-High	Kitchen 141 Serving Area	1	4L4' T12 EE/EEMAG-8'	6	0.8	4L4' T8 28w/ELEE LO-8'	6	0.5	2,840	OCC SENSOR CEILING	1	424
IN	1714	Wayne Valley-High	Kitchen 141 Serving Area	1	4L4' T12 EE/EEMAG-8'	2	0.3	4L4' T8 28w/ELEE LO-8'	2	0.2	2,840	OCC SENSOR CEILING	1	141
IN	1715	Wayne Valley-High	Kitchen 141 Prep Area	1	4L4' T12 EE/EEMAG-8'	4	0.6	4L4' T8 28w/ELEE LO-8'	4	0.3	2,840	OCC SENSOR CEILING	2	283
IN	1716	Wayne Valley-High	Kitchen 141 Wash Area	1	4L4' T12 EE/EEMAG-8'	2	0.3	4L4' T8 28w/ELEE LO-8'	2	0.2	2,840	OCC SENSOR CEILING	1	141
IN	1717	Wayne Valley-High	Kitchen Grease Hood	1	60W INCANDESCENT	2	0.1	23W COMPACT SI/29712/CF23I	2	0.0	2,840	NO RETRO		
IN	1718	Wayne Valley-High	Closet Clean	1	100W INCANDESCENT	1	0.1	23W COMPACT SI/29712/CF23I	1	0.0	500	TIMER WALLSWITCH 1GANG	1	3
IN	1719	Wayne Valley-High	Bath 141Bt	1	2L4' T8 32w/EL	2	0.1	1L4' T8 28w/ELEE HI/NEW	2	0.1	3,640	OCC SENSOR WALLSWITCH	1	72
IN	1720	Wayne Valley-High	Bath 141Bt	1	4L4' T12 EE/EEMAG-8'	1	0.1	2L4' T8 28w/ELEE HI/NEW-8'	1	0.1	3,640	INCLUDED ABOVE		70

In or Out	Line	Building Name	Location	Fl	Pre Fixture Description	Pre Qty	Pre kW	Post Fixture Description	Post Qty	Post kW	Annual Hours	*Control Description*	*Control Qty*	Control kWH Saved
IN	1721	Wayne Valley-High	Cafeteria 142	1	4L4' T12 EE/EEMAG-8'	15	2.1	2L4' T8 28w/ELEE HI/NEW-8'	15	1.0	3,440	OCC SENSOR CEILING	4	991
IN	1722	Wayne Valley-High	Cafeteria 142	1	2L4' T12 EE/EEMAG	6	0.4	1L4' T8 28w/ELEE HI/NEW	6	0.2	3,440	INCLUDED ABOVE		204
IN	1723	Wayne Valley-High	Classroom 143	1	4L4' T12 EE/EEMAG-8'	9	1.3	2L4' T8 28w/ELEE HI/NEW-8'	9	0.6	2,840	OCC SENSOR CEILING	1	491
IN	1724	Wayne Valley-High	Classroom 143	1	2L4' T12 EE/EEMAG	2	0.1	1L4' T8 28w/ELEE HI/NEW	2	0.1	2,840	INCLUDED ABOVE		56
IN	1725	Wayne Valley-High	Hall By Courtyard	1	1L4' T12 EE/EEMAG	11	0.4	1L4' T8 28w/ELEE HI/NEW	11	0.4	3,640	NO RETRO		
IN	1726	Wayne Valley-High	Locker 133Tm	1	1L4' T12 EE/EEMAG	2	0.1	1L4' T8 28w/ELEE HI/NEW	2	0.1	3,640	NO RETRO		
IN	1727	Wayne Valley-High	Locker 133Tm	1	2L4' T8 32w/EL	1	0.1	2L4' T8 28w/ELEE LO	1	0.0	3,640	NO RETRO		
IN	1728	Wayne Valley-High	Hall To Boiler Room	1	32W COMPACT SCREWIN	1	0.0	NO RETRO		0.0	3,640	OCC SENSOR WALLSWITCH	1	35
IN	1729	Wayne Valley-High	Mechanical Boiler	1	150W INCANDESCENT	8	1.2	2L2' T8 15w/ELEE LO/NEW	8	0.2	500	NO RETRO		
IN	1730	Wayne Valley-High	Mechanical Boiler	1	2L4' T12 EE/EEMAG	3	0.2	2L4' T8 28w/ELEE LO	3	0.1	500	NO RETRO		
IN	1731	Wayne Valley-High	Locker 133Tm	1	2L4' T8 32w/EL	17	1.0	2L4' T8 28w/ELEE LO	17	0.7	3,640	NO RETRO		
IN	1732	Wayne Valley-High	Locker Bathroom	1	4L4' T8 32w/EL-8'	2	0.2	2L4' T8 28w/ELEE HI/NEW-8'	2	0.1	3,640	OCC SENSOR WALLSWITCH	1	140
IN	1733	Wayne Valley-High	Locker Showers	1	2x13W COMPACT HARDV	5	0.2	NO RETRO		0.2	3,640	TIMER WALLSWITCH 1GANG	1	164
IN	1734	Wayne Valley-High	Locker Stand Up Lockers	1	2L4' T12 U EE/EEMAG	6	0.4	2L2' T8 15w/ELEE HI/RFL	6	0.2	3,640	OCC SENSOR CEILING	1	216
IN	1735	Wayne Valley-High	Storage Equipment	1	2L4' T12 U EE/EEMAG	4	0.3	2L2' T8 15w/ELEE HI/RFL	4	0.1	500	OCC SENSOR CEILING	1	20
IN	1736	Wayne Valley-High	Storage 1	1	2L4' T12 EE/EEMAG	4	0.3	1L4' T8 28w/ELEE HI/NEW	4	0.1	500	NO RETRO		
IN	1737	Wayne Valley-High	Storage 2	1	2L4' T12 EE/EEMAG	4	0.3	1L4' T8 28w/ELEE HI/NEW	4	0.1	500	NO RETRO		
IN	1738	Wayne Valley-High	Stair To Gym	s	1L4' T12 EE/EEMAG	2	0.1	1L4' T8 28w/ELEE HI/NEW	2	0.1	3,640	NO RETRO		
IN	1739	Wayne Valley-High	Stair To Gym	s	2L4' T8 32w/EL	1	0.1	2L4' T8 28w/ELEE LO	1	0.0	3,640	NO RETRO		
IN	1740	Wayne Valley-High	Storage By Boiler	1	2L4' T12 EE/EEMAG-8'	4	0.3	2L4' T8 28w/ELEE LO/NEW-8'	4	0.2	500	NO RETRO		
IN	1741	Wayne Valley-High	Locker 133Bl Boys	1	1L4' T12 EE/EEMAG	11	0.4	1L4' T8 28w/ELEE HI/NEW	11	0.4	3,640	NO RETRO		
IN	1742	Wayne Valley-High	Locker 133Bl Boys	1	60W INCANDESCENT	6	0.4	11W COMPACT SI/29708/CF11I	6	0.1	3,640	NO RETRO		
IN	1743	Wayne Valley-High	Locker Bath	1	2L4' T8 32w/EL	2	0.1	2L4' T8 28w/ELEE LO	2	0.1	3,640	OCC SENSOR CEIL DT 1GAN	1	92
IN	1744	Wayne Valley-High	Office Coach	1	4L4' T12 EE/EEMAG-8'	1	0.1	2L4' T8 28w/ELEE HI/NEW-8'	1	0.1	2,840	OCC SENSOR CEILING	1	55
IN	1745	Wayne Valley-High	Bath Coach	1	1L2' T8 17w/EL	1	0.0	2L2' T8 15w/ELEE LO/NEW	1	0.0	3,640	OCC SENSOR WALLSWITCH	1	26
IN	1746	Wayne Valley-High	Bath Coach	1	2x13W COMPACT HARDV	1	0.0	NO RETRO		0.0	3,640	INCLUDED ABOVE		33
IN	1747	Wayne Valley-High	Storage By Showers	1	1L4' T12 EE/EEMAG	2	0.1	1L4' T8 28w/ELEE HI/NEW	2	0.1	500	OCC SENSOR WALLSWITCH	1	10
IN	1748	Wayne Valley-High	Locker 133Bl Girls	1	1L4' T12 EE/EEMAG	11	0.4	1L4' T8 28w/ELEE HI/NEW	11	0.4	3,640	NO RETRO		
IN	1749	Wayne Valley-High	Locker 133Bl Girls	1	60W INCANDESCENT	6	0.4	11W COMPACT SI/29708/CF11I	6	0.1	3,640	NO RETRO		
IN	1750	Wayne Valley-High	Locker Bath	1	2L4' T8 32w/EL	2	0.1	2L4' T8 28w/ELEE LO	2	0.1	3,640	OCC SENSOR CEIL DT 1GAN	1	92
IN	1751	Wayne Valley-High	Office Coach	1	4L4' T12 EE/EEMAG-8'	1	0.1	2L4' T8 28w/ELEE HI/NEW-8'	1	0.1	2,840	OCC SENSOR CEILING	1	55
IN	1752	Wayne Valley-High	Bath Coach	1	1L2' T8 17w/EL	1	0.0	2L2' T8 15w/ELEE LO/NEW	1	0.0	3,640	OCC SENSOR WALLSWITCH	1	26
IN	1753	Wayne Valley-High	Bath Coach	1	2x13W COMPACT HARDV	1	0.0	NO RETRO		0.0	3,640	INCLUDED ABOVE		33
IN	1754	Wayne Valley-High	Gym Main	1	400W METAL HALIDE	74	33.7	222 WATT LED/NEW	74	16.4	3,440	OCC. SENSOR ON HI BAY FI	74	16,954
IN	1755	Wayne Valley-High	Storage Gym Main 1	1	23W COMPACT HARDWI	1	0.0	NO RETRO		0.0	500	NO RETRO		
IN	1756	Wayne Valley-High	Storage Gym Main 2	1	32W COMPACT SCREWIN	3	0.1	NO RETRO		0.1	500	NO RETRO		
IN	1757	Wayne Valley-High	Storage Gym Main 3	1	32W COMPACT SCREWIN	2	0.1	NO RETRO		0.1	500	NO RETRO		
IN	1758	Wayne Valley-High	Hall 167 To 176	1	2L4' T8 32w/EL	20	1.2	2L4' T8 28w/ELEE LO	20	0.8	2,548	ALREADY EXISTS		
IN	1759	Wayne Valley-High	Hall 167 To 176	1	4L4' T8 32w/EL	5	0.6	4L4' T8 28w/ELEE LO	5	0.4	2,548	ALREADY EXISTS		
IN	1760	Wayne Valley-High	Cafeteria 167 Multi Purpose	1	250W METAL HALIDE	11	3.2	NO RETRO		3.2	3,440	NO RETRO		

In or Out	Line	Building Name	Location	Fl	Pre Fixture Description	Pre Qty	Pre kW	Post Fixture Description	Post Qty	Post kW	Annual Hours	*Control Description*	*Control Qty*	Control kWH Saved
IN	1761	Wayne Valley-High	Office Open 167 Multi Purpose	1	32W COMPACT SCREWIN	5	0.2	NO RETRO		0.2	3,440	NO RETRO		
IN	1762	Wayne Valley-High	Classroom 168	1	4L4' T8 32w/EL	9	1.0	2L4' T8 28w/ELEE HI/RFL	9	0.6	1,988	ALREADY EXISTS		
IN	1763	Wayne Valley-High	Classroom 169	1	4L4' T8 32w/EL	9	1.0	2L4' T8 28w/ELEE HI/RFL	9	0.6	1,988	ALREADY EXISTS		
IN	1764	Wayne Valley-High	Classroom 170	1	4L4' T8 32w/EL	9	1.0	2L4' T8 28w/ELEE HI/RFL	9	0.6	1,988	ALREADY EXISTS		
IN	1765	Wayne Valley-High	Classroom 171	1	4L4' T8 32w/EL	9	1.0	2L4' T8 28w/ELEE HI/RFL	9	0.6	1,988	ALREADY EXISTS		
IN	1766	Wayne Valley-High	Classroom 172	1	4L4' T8 32w/EL	9	1.0	2L4' T8 28w/ELEE HI/RFL	9	0.6	1,988	ALREADY EXISTS		
IN	1767	Wayne Valley-High	Bath 171 Br	1	2L2' F40 BIAX/EL	1	0.1	2L2' F40BIAX/EL28W	1	0.1	3,640	OCC SENSOR CEIL DT 1GAN	1	69
IN	1768	Wayne Valley-High	Bath 171 Br	1	2L4' T8 32w/EL	3	0.2	2L4' T8 28w/ELEE LO	3	0.1	3,640	INCLUDED ABOVE		138
IN	1769	Wayne Valley-High	Closet 171Jc	1	2L4' T8 32w/EL	1	0.1	1L4' T8 28w/ELEE HI/NEW	1	0.0	500	OCC SENSOR WALLSWITCH	1	5
IN	1770	Wayne Valley-High	Bath 171Gr	1	2L2' F40 BIAX/EL	1	0.1	2L2' F40BIAX/EL28W	1	0.1	3,640	OCC SENSOR CEIL DT 1GAN	1	69
IN	1771	Wayne Valley-High	Bath 171Gr	1	2L4' T8 32w/EL	3	0.2	2L4' T8 28w/ELEE LO	3	0.1	3,640	INCLUDED ABOVE		138
IN	1772	Wayne Valley-High	Storage 174Gs	1	2L4' T8 32w/EL	3	0.2	1L4' T8 28w/ELEE HI/NEW	3	0.1	500	NO RETRO		
IN	1773	Wayne Valley-High	Mechanical 173Me	1	2L4' T8 32w/EL	3	0.2	1L4' T8 28w/ELEE HI/NEW	3	0.1	500	TIMER WALLSWITCH 1GANG	1	15
IN	1774	Wayne Valley-High	Classroom 176	1	6L4' T8 32w/EL-8'	3	0.5	6L4' T8 28w/ELEE LO-8'	3	0.4	1,988	ALREADY EXISTS		
IN	1775	Wayne Valley-High	Classroom 176	1	9L4' T8 32w/EL-12'	6	1.6	9L4' T8 28w/ELEE LO-12'	6	1.1	1,988	ALREADY EXISTS		
IN	1776	Wayne Valley-High	Classroom 175	1	6L4' T8 32w/EL-8'	3	0.5	6L4' T8 28w/ELEE LO-8'	3	0.4	1,988	ALREADY EXISTS		
IN	1777	Wayne Valley-High	Classroom 175	1	9L4' T8 32w/EL-12'	6	1.6	9L4' T8 28w/ELEE LO-12'	6	1.1	1,988	ALREADY EXISTS		
IN	1778	Wayne Valley-High	Hall 175 To Fire Doors	1	2L4' T8 32w/EL	9	0.5	2L4' T8 28w/ELEE LO	9	0.4	3,640	DAYLIGHT HARVESTING SYS	9	688
IN	1779	Wayne Valley-High	Hall 162 To 146	1	2L4' T8 32w/EL	19	1.1	2L4' T8 28w/ELEE LO	19	0.8	3,640	NO RETRO		
IN	1780	Wayne Valley-High	Hall 162 To 146	1	2L4' T8 32w/EL	11	0.7	2L4' T8 28w/ELEE LO	11	0.5	3,640	DAYLIGHT HARVESTING SYS	11	841
IN	1781	Wayne Valley-High	Hall 163 To 165	1	2L4' T8 32w/EL	8	0.5	2L4' T8 28w/ELEE LO	8	0.3	3,640	NO RETRO		
IN	1782	Wayne Valley-High	Hall 163 To 165	1	2L4' T8 32w/EL	4	0.2	2L4' T8 28w/ELEE LO	4	0.2	3,640	DAYLIGHT HARVESTING SYS	4	306
IN	1783	Wayne Valley-High	Classroom 163	1	4L4' T12 EE/EEMAG-8'	9	1.3	2L4' T8 28w/ELEE HI/NEW-8'	9	0.6	2,840	OCC SENSOR CEILING	1	491
IN	1784	Wayne Valley-High	Classroom 163	1	2L4' T12 EE/EEMAG	3	0.2	1L4' T8 28w/ELEE HI/NEW	3	0.1	2,840	INCLUDED ABOVE		84
IN	1785	Wayne Valley-High	Classroom 164	1	4L4' T12 EE/EEMAG-8'	9	1.3	2L4' T8 28w/ELEE HI/NEW-8'	9	0.6	2,840	OCC SENSOR CEILING	1	491
IN	1786	Wayne Valley-High	Classroom 164	1	2L4' T12 EE/EEMAG	3	0.2	1L4' T8 28w/ELEE HI/NEW	3	0.1	2,840	INCLUDED ABOVE		84
IN	1787	Wayne Valley-High	Classroom 165	1	4L4' T12 EE/EEMAG-8'	9	1.3	2L4' T8 28w/ELEE HI/NEW-8'	9	0.6	2,840	OCC SENSOR CEILING	1	491
IN	1788	Wayne Valley-High	Classroom 165	1	2L4' T12 EE/EEMAG	3	0.2	1L4' T8 28w/ELEE HI/NEW	3	0.1	2,840	INCLUDED ABOVE		84
IN	1789	Wayne Valley-High	Classroom 166	1	4L4' T12 EE/EEMAG-8'	9	1.3	2L4' T8 28w/ELEE HI/NEW-8'	9	0.6	2,840	OCC SENSOR CEILING	1	491
IN	1790	Wayne Valley-High	Classroom 166	1	2L4' T12 EE/EEMAG	3	0.2	1L4' T8 28w/ELEE HI/NEW	3	0.1	2,840	INCLUDED ABOVE		84
IN	1791	Wayne Valley-High	Hall By 167	1	2L4' T8 32w/EL	3	0.2	2L4' T8 28w/ELEE LO	3	0.1	2,548	ALREADY EXISTS		
IN	1792	Wayne Valley-High	Closet 167	1	2L4' T8 32w/EL	3	0.2	1L4' T8 28w/ELEE HI/NEW	3	0.1	500	OCC SENSOR WALLSWITCH	1	15
IN	1793	Wayne Valley-High	Classroom 144	1	4L4' T12 EE/EEMAG-8'	10	1.4	2L4' T8 28w/ELEE HI/NEW-8'	10	0.6	2,840	OCC SENSOR CEILING	1	545
IN	1794	Wayne Valley-High	Office 144	1	4L4' T12 EE/EEMAG-8'	2	0.3	2L4' T8 28w/ELEE HI/NEW-8'	2	0.1	2,840	OCC SENSOR WALLSWITCH	1	109
IN	1795	Wayne Valley-High	Classroom 149	1	4L4' T12 EE/EEMAG-8'	10	1.4	2L4' T8 28w/ELEE HI/NEW-8'	10	0.6	2,840	OCC SENSOR CEILING	1	545
IN	1796	Wayne Valley-High	Office 149	1	4L4' T12 EE/EEMAG-8'	2	0.3	2L4' T8 28w/ELEE HI/NEW-8'	2	0.1	2,840	OCC SENSOR WALLSWITCH	1	109
IN	1797	Wayne Valley-High	Classroom 145	1	4L4' T12 EE/EEMAG-8'	10	1.4	2L4' T8 28w/ELEE HI/NEW-8'	10	0.6	2,840	OCC SENSOR CEILING	1	545
IN	1798	Wayne Valley-High	Classroom 150	1	4L4' T12 EE/EEMAG-8'	10	1.4	2L4' T8 28w/ELEE HI/NEW-8'	10	0.6	2,840	OCC SENSOR CEILING	1	545
IN	1799	Wayne Valley-High	Classroom 151	1	4L4' T12 EE/EEMAG-8'	10	1.4	2L4' T8 28w/ELEE HI/NEW-8'	10	0.6	2,840	OCC SENSOR CEILING	1	545
IN	1800	Wayne Valley-High	Office 151	1	4L4' T12 EE/EEMAG-8'	2	0.3	2L4' T8 28w/ELEE HI/NEW-8'	2	0.1	2,840	OCC SENSOR WALLSWITCH	1	109

In or Out	Line	Building Name	Location	Fl	Pre Fixture Description	Pre Qty	Pre kW	Post Fixture Description	Post Qty	Post kW	Annual Hours	*Control Description*	*Control Qty*	Control kWH Saved
IN	1801	Wayne Valley-High	Classroom 152	1	4L4' T12 EE/EEMAG-8'	10	1.4	2L4' T8 28w/ELEE HI/NEW-8'	10	0.6	2,840	OCC SENSOR CEILING	1	545
IN	1802	Wayne Valley-High	Gym 146	1	4L4' T12 EE/EEMAG	14	2.0	2L4' T8 28w/ELEE HI/NEW	14	0.9	3,440	OCC SENSOR CEILING	1	925
IN	1803	Wayne Valley-High	Hall 144 To 147	1	2L4' T8 32w/EL	22	1.3	2L4' T8 28w/ELEE LO	22	0.9	3,640	NO RETRO		
IN	1804	Wayne Valley-High	Closet Clean	1	150W INCANDESCENT	1	0.2	23W COMPACT SI/29712/CF23	1	0.0	500	OCC SENSOR WALLSWITCH	1	3
IN	1805	Wayne Valley-High	Classroom 153	1	4L4' T12 EE/EEMAG-8'	12	1.7	2L4' T8 28w/ELEE HI/NEW-8'	12	0.8	2,840	OCC SENSOR CEILING	1	654
IN	1806	Wayne Valley-High	Classroom 153	1	2L4' T12 EE/EEMAG	3	0.2	1L4' T8 28w/ELEE HI/NEW	3	0.1	2,840	INCLUDED ABOVE		84
IN	1807	Wayne Valley-High	Office 154	1	2L4' T8 32w/EL	2	0.1	1L4' T8 28w/ELEE HI/NEW	2	0.1	2,840	OCC SENSOR WALLSWITCH	1	56
IN	1808	Wayne Valley-High	Office 155	1	2L4' T8 32w/EL	2	0.1	1L4' T8 28w/ELEE HI/NEW	2	0.1	2,840	OCC SENSOR WALLSWITCH	1	56
IN	1809	Wayne Valley-High	Office 147	1	3L4' T8 32w/EL	3	0.3	3L4' T8 28w/ELEE LO	3	0.2	2,840	OCC SENSOR WALLSWITCH	1	161
IN	1810	Wayne Valley-High	Office 147	1	4L4' T12 EE/EEMAG	4	0.6	2L4' T8 28w/ELEE HI/RFL	4	0.3	2,840	OCC SENSOR WALLSWITCH	1	218
IN	1811	Wayne Valley-High	Storage 147	1	2L4' T12 EE/EEMAG	1	0.1	1L4' T8 28w/ELEE HI/NEW	1	0.0	500	OCC SENSOR WALLSWITCH	1	5
IN	1812	Wayne Valley-High	Storage Books	1	3L4' T8 32w/EL	6	0.5	3L4' T8 28w/ELEE LO	6	0.4	500	OCC SENSOR CEILING	1	57
IN	1813	Wayne Valley-High	Mechanical Electrical	1	100W INCANDESCENT	1	0.1	23W COMPACT SI/29712/CF23	1	0.0	500	TIMER WALLSWITCH 1GANG	1	3
IN	1814	Wayne Valley-High	Hall 147 To 157Bt	1	2L4' T8 32w/EL	11	0.7	2L4' T8 28w/ELEE LO	11	0.5	3,640	NO RETRO		
IN	1815	Wayne Valley-High	Library	1	23W COMPACT HARDWIR	12	0.3	NO RETRO		0.3	2,840	NO RETRO		
IN	1816	Wayne Valley-High	Library	1	3L4' T8 32w/EL	27	2.4	2L4' T8 28w/ELEE HI/RFL	27	1.7	2,840	NO RETRO		
IN	1817	Wayne Valley-High	Library	1	4L4' T12 EE/EEMAG	110	15.4	2L4' T8 28w/ELEE HI/RFL	110	7.0	2,840	NO RETRO		
IN	1818	Wayne Valley-High	Library Auditorium Area	1	3L4' T8 32w/EL	20	1.8	2L4' T8 28w/ELEE HI/RFL	20	1.3	2,840	NO RETRO		
IN	1819	Wayne Valley-High	Library Auditorium Area	1	150W INCANDESCENT	8	1.2	22 WATT LED/KIT	8	0.2	2,840	NO RETRO		
IN	1820	Wayne Valley-High	Storage It	1	3L4' T8 32w/EL	4	0.4	3L4' T8 28w/ELEE LO	4	0.3	500	NO RETRO		
IN	1821	Wayne Valley-High	Office Computer Learning Center	1	3L4' T8 32w/EL	6	0.5	3L4' T8 28w/ELEE LO	6	0.4	2,840	OCC SENSOR CEILING	1	322
IN	1822	Wayne Valley-High	Office Librarian	1	4L4' T8 32w/EL	4	0.4	2L4' T8 28w/ELEE HI/RFL	4	0.3	2,840	OCC SENSOR CEILING	1	218
IN	1823	Wayne Valley-High	Storage Audio Visual	1	4L4' T8 32w/EL	4	0.4	2L4' T8 28w/ELEE HI/RFL	4	0.3	500	OCC SENSOR CEILING	1	38
IN	1824	Wayne Valley-High	Classroom 156	1	4L4' T12 EE/EEMAG-8'	7	1.0	2L4' T8 28w/ELEE HI/NEW-8'	7	0.4	2,840	OCC SENSOR CEILING	1	382
IN	1825	Wayne Valley-High	Classroom 156	1	2L4' T12 EE/EEMAG	3	0.2	1L4' T8 28w/ELEE HI/NEW	3	0.1	2,840	INCLUDED ABOVE		84
IN	1826	Wayne Valley-High	Office 156	1	4L4' T12 EE/EEMAG-8'	5	0.7	2L4' T8 28w/ELEE HI/NEW-8'	5	0.3	2,840	OCC SENSOR CEILING	1	273
IN	1827	Wayne Valley-High	Classroom 157	1	4L4' T12 EE/EEMAG-8'	9	1.3	2L4' T8 28w/ELEE HI/NEW-8'	9	0.6	2,840	OCC SENSOR CEILING	1	491
IN	1828	Wayne Valley-High	Classroom 157	1	2L4' T12 EE/EEMAG	3	0.2	1L4' T8 28w/ELEE HI/NEW	3	0.1	2,840	INCLUDED ABOVE		84
IN	1829	Wayne Valley-High	Bath 157Bt	1	2L4' T12 EE/EEMAG	4	0.3	1L4' T8 28w/ELEE HI/NEW	4	0.1	3,640	NO RETRO		
IN	1830	Wayne Valley-High	Closet Clean	1	100W INCANDESCENT	1	0.1	23W COMPACT SI/29712/CF23	1	0.0	500	NO RETRO		
IN	1831	Wayne Valley-High	Bath 157Gt	1	2L4' T12 EE/EEMAG	4	0.3	1L4' T8 28w/ELEE HI/NEW	4	0.1	3,640	NO RETRO		
IN	1832	Wayne Valley-High	Classroom 158	1	4L4' T12 EE/EEMAG-8'	12	1.7	2L4' T8 28w/ELEE HI/NEW-8'	12	0.8	2,840	OCC SENSOR CEILING	1	654
IN	1833	Wayne Valley-High	Classroom 159	1	6L4' T8 32w/EL-8'	10	1.8	6L4' T8 28w/ELEE LO-8'	10	1.3	2,840	OCC SENSOR CEILING	1	1,074
IN	1834	Wayne Valley-High	Office 159	1	4L4' T12 EE/EEMAG-8'	2	0.3	2L4' T8 28w/ELEE HI/NEW-8'	2	0.1	2,840	OCC SENSOR WALLSWITCH	1	109
IN	1835	Wayne Valley-High	Classroom 160	1	4L4' T12 EE/EEMAG-8'	10	1.4	2L4' T8 28w/ELEE HI/NEW-8'	10	0.6	2,840	OCC SENSOR CEILING	1	545
IN	1836	Wayne Valley-High	Classroom 161	1	4L4' T12 EE/EEMAG-8'	9	1.3	2L4' T8 28w/ELEE HI/NEW-8'	9	0.6	2,840	OCC SENSOR CEILING	1	491
IN	1837	Wayne Valley-High	Lounge 162	1	4L4' T12 EE/EEMAG-8'	3	0.4	2L4' T8 28w/ELEE HI/NEW-8'	3	0.2	2,520	NO RETRO		
IN	1838	Wayne Valley-High	Classroom 162	1	4L4' T12 EE/EEMAG-8'	9	1.3	2L4' T8 28w/ELEE HI/NEW-8'	9	0.6	2,840	OCC SENSOR CEILING	1	491
IN	1839	Wayne Valley-High	Bldg Mt Fixture 1	ext	23W COMPACT HARDWIR	1	0.0	NO RETRO		0.0	4,380	NO RETRO		
IN	1840	Wayne Valley-High	Bldg Mt Fixture 2	ext	2x18W COMPACT HARDV	8	0.3	NO RETRO		0.3	4,380	NO RETRO		

In or Out	Line	Building Name	Location	Fl	Pre Fixture Description	Pre Qty	Pre kW	Post Fixture Description	Post Qty	Post kW	Annual Hours	*Control Description*	*Control Qty*	Control kWH Saved
IN	1841	Wayne Valley-High	Bldg Mt Fixture 3	ext	70W HI PRESSURE SODI	7	0.6	26 WATT LED/NEW	7	0.2	4,380	NO RETRO		
IN	1842	Wayne Valley-High	Bldg Mt Fixture 4	ext	50W HI PRESSURE SODI	3	0.2	26 WATT LED/NEW	3	0.1	4,380	NO RETRO		
IN	1843	Wayne Valley-High	Bldg Mt Fixture 5	ext	13W COMPACT HARDWI	2	0.0	NO RETRO		0.0	4,380	NO RETRO		
IN	1844	Wayne Valley-High	Bldg Mt Fixture 6	ext	2x18W COMPACT HARDV	24	0.9	NO RETRO		0.9	4,380	NO RETRO		
IN	1845	Wayne Valley-High	Bldg Mt Fixture 7	ext	150W INCANDESCENT	10	1.5	22 WATT LED/KIT	10	0.2	4,380	NO RETRO		
IN	1846	Wayne Valley-High	Bldg Mt Fixture 8	ext	250W HI PRESSURE SOD	2	0.6	133 WATT LED/NEW	2	0.3	4,380	NO RETRO		
IN	1847	Wayne Valley-High	Bldg Mt Fixture 9	ext	90W INCANDESCENT	3	0.3	25 WATT LED/NEW	3	0.1	4,380	NO RETRO		
IN	1848	Wayne Valley-High	Bldg Mt Fixture 10	ext	23W COMPACT HARDWI	4	0.1	NO RETRO		0.1	4,380	NO RETRO		
IN	1849	Wayne Valley-High	Bldg Mt Fixture 11	ext	400W METAL HALIDE	2	0.9	231 WATT LED/NEW	2	0.5	4,380	NO RETRO		
IN	1850	Wayne Valley-High	Bldg Mt Fixture 12	ext	1000W METAL HALIDE	1	1.1	231 WATT LED/NEW	1	0.2	4,380	NO RETRO		
IN	1851	Wayne Valley-High	Parking Lot Football Field (4)	ext	250W HI PRESSURE SOD	8	2.4	133 WATT LED/NEW	8	1.1	4,380	NO RETRO		
IN	1852	Wayne Valley-High	Parking Lot Football Field	ext	250W HI PRESSURE SOD	1	0.3	133 WATT LED/NEW	1	0.1	4,380	NO RETRO		
IN	1853	Wayne Valley-High	Parking Lot By School (5)	ext	250W MERCURY VAPOR	10	2.9	133 WATT LED/NEW	10	1.3	4,380	NO RETRO		
IN	1854	Wayne Valley-High	Parking Lot By School	ext	400W METAL HALIDE	7	3.2	231 WATT LED/NEW	7	1.6	4,380	NO RETRO		
IN	1855	Wayne Valley-High	Parking Lot By School (5)	ext	250W MERCURY VAPOR	10	2.9	133 WATT LED/NEW	10	1.3	4,380	NO RETRO		
IN	1856	Wayne Valley-High	Parking Lot By School	ext	400W METAL HALIDE	4	1.8	231 WATT LED/NEW	4	0.9	4,380	NO RETRO		
IN	1857	Wayne Valley-High	Driveway To Football Field (2)	ext	250W MERCURY VAPOR	2	0.6	133 WATT LED/NEW	2	0.3	4,360	NO RETRO		
IN	1858	Wayne Valley-High	Parking Lot By Corner Of School	ext	250W MERCURY VAPOR	1	0.3	133 WATT LED/NEW	1	0.1	4,380	NO RETRO		
IN	1859	Wayne Valley-High	Parking Lot By Corner Of School	ext	400W METAL HALIDE	1	0.5	231 WATT LED/NEW	1	0.2	4,380	NO RETRO		
IN	1860	Wayne Valley-High	Parking Lot By Corner Of School	ext	250W METAL HALIDE	1	0.3	133 WATT LED/NEW	1	0.1	4,380	NO RETRO		
IN	1861	Albert Payson Terh	Gym Main	1	2L4' T8 32w/EL	68	4.1	2L4' T8 28w/ELEE LO	68	2.9	2,920	NO RETRO		
IN	1862	Albert Payson Terh	Classroom 21	1	4L4' T12 EE/EEMAG-8'	6	0.8	2L4' T8 28w/ELEE HI/NEW-8'	6	0.4	2,520	OCC SENSOR CEILING	1	290
IN	1863	Albert Payson Terh	Classroom 21	1	2L4' T12 EE/EEMAG	3	0.2	1L4' T8 28w/ELEE HI/NEW	3	0.1	2,520	INCLUDED ABOVE		75
IN	1864	Albert Payson Terh	Bath 21	1	2x60W INCANDESCENTS	1	0.1	2L2' T8 15w/ELEE LO/NEW	1	0.0	3,320	TIMER WALLSWITCH 1GANG	1	24
IN	1865	Albert Payson Terh	Classroom 20	1	4L4' T12 EE/EEMAG-8'	6	0.8	2L4' T8 28w/ELEE HI/NEW-8'	6	0.4	2,520	OCC SENSOR CEILING	1	290
IN	1866	Albert Payson Terh	Classroom 20	1	2L4' T12 EE/EEMAG	3	0.2	1L4' T8 28w/ELEE HI/NEW	3	0.1	2,520	INCLUDED ABOVE		75
IN	1867	Albert Payson Terh	Bath 20	1	2x60W INCANDESCENTS	1	0.1	2L2' T8 15w/ELEE LO/NEW	1	0.0	3,320	TIMER WALLSWITCH 1GANG	1	24
IN	1868	Albert Payson Terh	Classroom 19	1	4L4' T12 EE/EEMAG-8'	6	0.8	2L4' T8 28w/ELEE HI/NEW-8'	6	0.4	2,520	OCC SENSOR CEILING	1	290
IN	1869	Albert Payson Terh	Classroom 19	1	2L4' T12 EE/EEMAG	3	0.2	1L4' T8 28w/ELEE HI/NEW	3	0.1	2,520	INCLUDED ABOVE		75
IN	1870	Albert Payson Terh	Bath 19	1	2x60W INCANDESCENTS	1	0.1	2L2' T8 15w/ELEE LO/NEW	1	0.0	3,320	TIMER WALLSWITCH 1GANG	1	24
IN	1871	Albert Payson Terh	Classroom 18	1	4L4' T12 EE/EEMAG-8'	6	0.8	2L4' T8 28w/ELEE HI/NEW-8'	6	0.4	2,520	OCC SENSOR CEILING	1	290
IN	1872	Albert Payson Terh	Classroom 18	1	2L4' T12 EE/EEMAG	3	0.2	1L4' T8 28w/ELEE HI/NEW	3	0.1	2,520	INCLUDED ABOVE		75
IN	1873	Albert Payson Terh	Bath 18	1	2x60W INCANDESCENTS	1	0.1	2L2' T8 15w/ELEE LO/NEW	1	0.0	3,320	TIMER WALLSWITCH 1GANG	1	24
IN	1874	Albert Payson Terh	Classroom 17	1	4L4' T12 EE/EEMAG-8'	9	1.3	2L4' T8 28w/ELEE HI/NEW-8'	9	0.6	2,520	OCC SENSOR CEILING	1	435
IN	1875	Albert Payson Terh	Classroom 17	1	2L4' T12 EE/EEMAG	9	0.6	1L4' T8 28w/ELEE HI/NEW	9	0.3	2,520	INCLUDED ABOVE		225
IN	1876	Albert Payson Terh	Bath 17	1	2x60W INCANDESCENTS	1	0.1	2L2' T8 15w/ELEE LO/NEW	1	0.0	3,320	TIMER WALLSWITCH 1GANG	1	24
IN	1877	Albert Payson Terh	Hall By 17	1	3L4' T8 32w/EL	2	0.2	3L4' T8 28w/ELEE LO	2	0.1	3,620	OCC SENSOR CEILING	1	137
IN	1878	Albert Payson Terh	Classroom 16	1	4L4' T12 EE/EEMAG-8'	9	1.3	2L4' T8 28w/ELEE HI/NEW-8'	9	0.6	2,520	OCC SENSOR CEILING	1	435
IN	1879	Albert Payson Terh	Classroom 16	1	2L4' T12 EE/EEMAG	6	0.4	1L4' T8 28w/ELEE HI/NEW	6	0.2	2,520	INCLUDED ABOVE		150
IN	1880	Albert Payson Terh	Bath 16	1	2x60W INCANDESCENTS	1	0.1	2L2' T8 15w/ELEE LO/NEW	1	0.0	3,320	TIMER WALLSWITCH 1GANG	1	24

In or Out	Line	Building Name	Location	Fl	Pre Fixture Description	Pre Qty	Pre kW	Post Fixture Description	Post Qty	Post kW	Annual Hours	*Control Description*	*Control Qty*	Control kWH Saved
IN	1881	Albert Payson Terh	Classroom 15	1	4L4' T12 EE/EEMAG-8'	9	1.3	2L4' T8 28w/ELEE HI/NEW-8'	9	0.6	2,520	OCC SENSOR CEILING	1	435
IN	1882	Albert Payson Terh	Classroom 15	1	2L4' T12 EE/EEMAG	6	0.4	1L4' T8 28w/ELEE HI/NEW	6	0.2	2,520	INCLUDED ABOVE		150
IN	1883	Albert Payson Terh	Bath 15	1	2x60W INCANDESCENTS	1	0.1	2L2' T8 15w/ELEE LO/NEW	1	0.0	3,320	TIMER WALLSWITCH 1GANG	1	24
IN	1884	Albert Payson Terh	Classroom 14	1	4L4' T12 EE/EEMAG-8'	6	0.8	2L4' T8 28w/ELEE HI/NEW-8'	6	0.4	2,520	OCC SENSOR CEILING	1	290
IN	1885	Albert Payson Terh	Classroom 14	1	2L4' T12 EE/EEMAG	3	0.2	1L4' T8 28w/ELEE HI/NEW	3	0.1	2,520	INCLUDED ABOVE		75
IN	1886	Albert Payson Terh	Bath 14	1	2x60W INCANDESCENTS	1	0.1	2L2' T8 15w/ELEE LO/NEW	1	0.0	3,320	TIMER WALLSWITCH 1GANG	1	24
IN	1887	Albert Payson Terh	Classroom 13	1	4L4' T12 EE/EEMAG-8'	6	0.8	2L4' T8 28w/ELEE HI/NEW-8'	6	0.4	2,520	OCC SENSOR CEILING	1	290
IN	1888	Albert Payson Terh	Classroom 13	1	2L4' T12 EE/EEMAG	3	0.2	1L4' T8 28w/ELEE HI/NEW	3	0.1	2,520	INCLUDED ABOVE		75
IN	1889	Albert Payson Terh	Bath 13	1	2x60W INCANDESCENTS	1	0.1	2L2' T8 15w/ELEE LO/NEW	1	0.0	3,320	TIMER WALLSWITCH 1GANG	1	24
IN	1890	Albert Payson Terh	Storage Equipment	1	2L4' T12 EE/EEMAG	2	0.1	1L4' T8 28w/ELEE HI/NEW	2	0.1	500	TIMER WALLSWITCH 1GANG	1	10
IN	1891	Albert Payson Terh	Bath Women	1	4L4' T8 32w/EL-8'	1	0.1	2L4' T8 28w/ELEE HI/NEW-8'	1	0.1	3,320	OCC SENSOR CEIL DT 1GAN	1	64
IN	1892	Albert Payson Terh	Bath Women	1	2L2' T12 STD/STD	1	0.1	2L2' T8 15w/ELEE LO/NEW	1	0.0	3,320	INCLUDED ABOVE		24
IN	1893	Albert Payson Terh	Closet Clean	1	60W INCANDESCENT	1	0.1	23W COMPACT SI/29712/CF23I	1	0.0	500	OCC SENSOR WALLSWITCH	1	3
IN	1894	Albert Payson Terh	Bath Men	1	4L4' T8 32w/EL-8'	1	0.1	2L4' T8 28w/ELEE HI/NEW-8'	1	0.1	3,320	OCC SENSOR CEIL DT 1GAN	1	64
IN	1895	Albert Payson Terh	Bath Men	1	2L2' T12 STD/STD	1	0.1	2L2' T8 15w/ELEE LO/NEW	1	0.0	3,320	INCLUDED ABOVE		24
IN	1896	Albert Payson Terh	Office Custodial	1	3L4' T12 EE/EEMAG	4	0.4	3L4' T8 28w/ELEE LO	4	0.3	2,320	TIMER WALLSWITCH 1GANG	1	175
IN	1897	Albert Payson Terh	Mechanical Boiler	1	32W COMPACT SCREWIN	6	0.2	2L4' T8 28w/ELEE LO/NEW	6	0.3	500	TIMER WALLSWITCH 1GANG	2	38
IN	1898	Albert Payson Terh	Closet Books	1	1L4' T12 EE/EEMAG	1	0.0	1L4' T8 28w/ELEE HI/NEW	1	0.0	500	OCC SENSOR WALLSWITCH	1	5
IN	1899	Albert Payson Terh	Storage Equipment	1	2L4' T12 EE/EEMAG	4	0.3	1L4' T8 28w/ELEE HI/NEW	4	0.1	500	NO RETRO		
IN	1900	Albert Payson Terh	Closet Books	1	22W & 32W CIRCLELINE I	1	0.1	2L2' T8 15w/ELEE LO/NEW	1	0.0	500	OCC SENSOR WALLSWITCH	1	4
IN	1901	Albert Payson Terh	Kitchen Serving Line	1	4L4' T12 EE/EEMAG-8'	12	1.7	4L4' T8 28w/ELEE LO/NEW-8'	12	1.0	1,920	NO RETRO		
IN	1902	Albert Payson Terh	Kitchen Serving Line	1	2L4' T12 EE/EEMAG	2	0.1	2L4' T8 28w/ELEE LO/NEW	2	0.1	1,920	NO RETRO		
IN	1903	Albert Payson Terh	Kitchen Grease Hood	1	60W INCANDESCENT	2	0.1	23W COMPACT SI/29712/CF23I	2	0.0	1,920	NO RETRO		
IN	1904	Albert Payson Terh	Kitchen Wash Area	1	2L4' T12 EE/EEMAG	1	0.1	2L4' T8 28w/ELEE LO/NEW	1	0.0	1,920	NO RETRO		
IN	1905	Albert Payson Terh	Kitchen Wash Area	1	2x60W INCANDESCENTS	5	0.6	11W COMPACT SI/29708/CF11I	10	0.1	1,920	NO RETRO		
IN	1906	Albert Payson Terh	Storage Dry Goods	1	2L4' T12 EE/EEMAG	1	0.1	1L4' T8 28w/ELEE HI/NEW	1	0.0	500	OCC SENSOR WALLSWITCH	1	5
IN	1907	Albert Payson Terh	Lounge Staff	1	4L4' T8 32w/EL	2	0.2	4L4' T8 28w/ELEE LO	2	0.2	2,520	OCC SENSOR CEILING	1	125
IN	1908	Albert Payson Terh	Office Open Main	1	4L4' T12 EE/EEMAG	7	1.0	2L4' T8 28w/ELEE HI/RFL	7	0.4	2,720	OCC SENSOR CEILING	1	366
IN	1909	Albert Payson Terh	Office Principal	1	4L4' T12 EE/EEMAG	4	0.6	2L4' T8 28w/ELEE HI/RFL	4	0.3	2,320	OCC SENSOR CEILING	1	178
IN	1910	Albert Payson Terh	Office Copy	1	4L4' T12 EE/EEMAG	1	0.1	2L4' T8 28w/ELEE HI/RFL	1	0.1	2,320	OCC SENSOR WALLSWITCH	1	45
IN	1911	Albert Payson Terh	Office Nurse	1	4L4' T12 EE/EEMAG-8'	2	0.3	2L4' T8 28w/ELEE HI/NEW-8'	2	0.1	2,320	OCC SENSOR CEILING	1	89
IN	1912	Albert Payson Terh	Office Nurse	1	2L4' T12 EE/EEMAG	2	0.1	1L4' T8 28w/ELEE HI/NEW	2	0.1	2,320	INCLUDED ABOVE		46
IN	1913	Albert Payson Terh	Office Nurse	1	60W INCANDESCENT	1	0.1	11 WATT LED SI/LED10Par20/D	1	0.0	2,320	INCLUDED ABOVE		8
IN	1914	Albert Payson Terh	Bath Nurse	1	2x60W INCANDESCENTS	1	0.1	2L2' T8 15w/ELEE LO/NEW	1	0.0	3,320	TIMER WALLSWITCH 1GANG	1	24
IN	1915	Albert Payson Terh	Bath Unisex	1	2L4' T12 EE/EEMAG	1	0.1	2L4' T8 28w/ELEE HI/RFL	1	0.1	3,320	OCC SENSOR WALLSWITCH	1	64
IN	1916	Albert Payson Terh	Conference Cst	1	4L4' T12 EE/EEMAG	4	0.6	2L4' T8 28w/ELEE HI/RFL	4	0.3	2,320	OCC SENSOR WALLSWITCH	1	178
IN	1917	Albert Payson Terh	Classroom Reading	1	4L4' T12 EE/EEMAG	4	0.6	2L4' T8 28w/ELEE HI/RFL	4	0.3	2,520	OCC SENSOR CEILING	1	194
IN	1918	Albert Payson Terh	Classroom 101A	1	4L4' T12 EE/EEMAG	7	1.0	2L4' T8 28w/ELEE HI/RFL	7	0.4	2,520	OCC SENSOR CEILING	1	339
IN	1919	Albert Payson Terh	Classroom 101B	1	4L4' T12 EE/EEMAG	7	1.0	2L4' T8 28w/ELEE HI/RFL	7	0.4	2,520	OCC SENSOR CEILING	1	339
IN	1920	Albert Payson Terh	Bath 101B	1	4L4' T12 EE/EEMAG	1	0.1	2L4' T8 28w/ELEE HI/RFL	1	0.1	3,320	OCC SENSOR WALLSWITCH	1	64

In or Out	Line	Building Name	Location	Fl	Pre Fixture Description	Pre Qty	Pre kW	Post Fixture Description	Post Qty	Post kW	Annual Hours	*Control Description*	*Control Qty*	Control kWH Saved
IN	1921	Albert Payson Terh	Classroom 103A	1	4L4' T12 EE/EEMAG	7	1.0	2L4' T8 28w/ELEE HI/RFL	7	0.4	2,520	OCC SENSOR CEILING	1	339
IN	1922	Albert Payson Terh	Classroom 103B	1	4L4' T12 EE/EEMAG	7	1.0	2L4' T8 28w/ELEE HI/RFL	7	0.4	2,520	OCC SENSOR CEILING	1	339
IN	1923	Albert Payson Terh	Bath 103B	1	4L4' T12 EE/EEMAG	1	0.1	2L4' T8 28w/ELEE HI/RFL	1	0.1	3,320	OCC SENSOR WALLSWITCH	1	64
IN	1924	Albert Payson Terh	Classroom 100	1	4L4' T12 EE/EEMAG	10	1.4	2L4' T8 28w/ELEE HI/RFL	10	0.6	2,520	OCC SENSOR CEILING	1	484
IN	1925	Albert Payson Terh	Bath 100	1	4L4' T12 EE/EEMAG	1	0.1	2L4' T8 28w/ELEE HI/RFL	1	0.1	3,320	OCC SENSOR WALLSWITCH	1	64
IN	1926	Albert Payson Terh	Classroom 102	1	4L4' T12 EE/EEMAG	10	1.4	2L4' T8 28w/ELEE HI/RFL	10	0.6	2,520	OCC SENSOR CEILING	1	484
IN	1927	Albert Payson Terh	Bath 102	1	4L4' T12 EE/EEMAG	1	0.1	2L4' T8 28w/ELEE HI/RFL	1	0.1	3,320	OCC SENSOR WALLSWITCH	1	64
IN	1928	Albert Payson Terh	Hall 102 To Gym	1	4L4' T12 EE/EEMAG	7	1.0	2L4' T8 28w/ELEE HI/RFL	7	0.4	3,620	NO RETRO		
IN	1929	Albert Payson Terh	Hall 102 To Gym	1	3L4' T12 EE/EEMAG	16	1.8	3L4' T8 28w/ELEE LO	16	1.0	3,620	NO RETRO		
IN	1930	Albert Payson Terh	Hall 102 To Gym	1	2L4' T12 U EE/EEMAG	2	0.1	2L2' T8 15w/ELEE HI/RFL	2	0.1	3,620	NO RETRO		
IN	1931	Albert Payson Terh	Hall Display Case	1	1L4' T12 EE/EEMAG	1	0.0	1L4' T8 28w/ELEE LO	1	0.0	3,620	TIMER WALLSWITCH 1GANG	1	24
IN	1932	Albert Payson Terh	Gym Multipurpose	1	150W METAL HALIDE	17	3.2	46 WATT LED/NEW	17	0.8	2,920	OCC. SENSOR ON HI BAY FI	17	685
IN	1933	Albert Payson Terh	Storage Chairs	1	60W INCANDESCENT	2	0.1	23W COMPACT SI/29712/CF23I	2	0.0	500	TIMER WALLSWITCH 1GANG	1	7
IN	1934	Albert Payson Terh	Classroom 12	1	4L4' T12 EE/EEMAG-8'	6	0.8	2L4' T8 28w/ELEE HI/NEW-8'	6	0.4	2,520	OCC SENSOR CEILING	1	290
IN	1935	Albert Payson Terh	Classroom 12	1	2L4' T12 EE/EEMAG	3	0.2	1L4' T8 28w/ELEE HI/NEW	3	0.1	2,520	INCLUDED ABOVE		75
IN	1936	Albert Payson Terh	Bath 12	1	2x60W INCANDESCENTS	1	0.1	2L2' T8 15w/ELEE LO/NEW	1	0.0	3,320	TIMER WALLSWITCH 1GANG	1	24
IN	1937	Albert Payson Terh	Classroom 11	1	4L4' T12 EE/EEMAG-8'	6	0.8	2L4' T8 28w/ELEE HI/NEW-8'	6	0.4	2,520	OCC SENSOR CEILING	1	290
IN	1938	Albert Payson Terh	Classroom 11	1	2L4' T12 EE/EEMAG	3	0.2	1L4' T8 28w/ELEE HI/NEW	3	0.1	2,520	INCLUDED ABOVE		75
IN	1939	Albert Payson Terh	Bath 11	1	2x60W INCANDESCENTS	1	0.1	2L2' T8 15w/ELEE LO/NEW	1	0.0	3,320	TIMER WALLSWITCH 1GANG	1	24
IN	1940	Albert Payson Terh	Classroom 10	1	4L4' T12 EE/EEMAG-8'	6	0.8	2L4' T8 28w/ELEE HI/NEW-8'	6	0.4	2,520	OCC SENSOR CEILING	1	290
IN	1941	Albert Payson Terh	Classroom 10	1	2L4' T12 EE/EEMAG	3	0.2	1L4' T8 28w/ELEE HI/NEW	3	0.1	2,520	INCLUDED ABOVE		75
IN	1942	Albert Payson Terh	Bath 10	1	2x60W INCANDESCENTS	1	0.1	2L2' T8 15w/ELEE LO/NEW	1	0.0	3,320	TIMER WALLSWITCH 1GANG	1	24
IN	1943	Albert Payson Terh	Classroom 3	1	4L4' T12 EE/EEMAG-8'	6	0.8	2L4' T8 28w/ELEE HI/NEW-8'	6	0.4	2,520	OCC SENSOR CEILING	1	290
IN	1944	Albert Payson Terh	Classroom 3	1	2L4' T12 EE/EEMAG	3	0.2	1L4' T8 28w/ELEE HI/NEW	3	0.1	2,520	INCLUDED ABOVE		75
IN	1945	Albert Payson Terh	Bath 3	1	2x60W INCANDESCENTS	1	0.1	2L2' T8 15w/ELEE LO/NEW	1	0.0	3,320	TIMER WALLSWITCH 1GANG	1	24
IN	1946	Albert Payson Terh	Classroom 2	1	4L4' T12 EE/EEMAG-8'	6	0.8	2L4' T8 28w/ELEE HI/NEW-8'	6	0.4	2,520	OCC SENSOR CEILING	1	290
IN	1947	Albert Payson Terh	Classroom 2	1	2L4' T12 EE/EEMAG	3	0.2	1L4' T8 28w/ELEE HI/NEW	3	0.1	2,520	INCLUDED ABOVE		75
IN	1948	Albert Payson Terh	Bath 2	1	2x60W INCANDESCENTS	1	0.1	2L2' T8 15w/ELEE LO/NEW	1	0.0	3,320	TIMER WALLSWITCH 1GANG	1	24
IN	1949	Albert Payson Terh	Classroom 1	1	4L4' T12 EE/EEMAG-8'	6	0.8	2L4' T8 28w/ELEE HI/NEW-8'	6	0.4	2,520	OCC SENSOR CEILING	1	290
IN	1950	Albert Payson Terh	Classroom 1	1	2L4' T12 EE/EEMAG	3	0.2	1L4' T8 28w/ELEE HI/NEW	3	0.1	2,520	INCLUDED ABOVE		75
IN	1951	Albert Payson Terh	Bath 1	1	2x60W INCANDESCENTS	1	0.1	2L2' T8 15w/ELEE LO/NEW	1	0.0	3,320	TIMER WALLSWITCH 1GANG	1	24
IN	1952	Albert Payson Terh	Hall By Classroom 3	1	3L2' T8 17w/EL	3	0.1	3L2' T8 15w/ELEE LO	3	0.1	3,620	TIMER WALLSWITCH 1GANG	1	127
IN	1953	Albert Payson Terh	Stage	1	2L8' T12 EE/EEMAG	4	0.5	4L4' T8 28w/ELEE LO/STRIP KI	4	0.3	2,920	NO RETRO		
IN	1954	Albert Payson Terh	Stage	1	150W INCANDESCENT	2	0.3	NO RETRO		0.3	2,920	NO RETRO		
IN	1955	Albert Payson Terh	Classroom 4	1	4L4' T12 EE/EEMAG-8'	9	1.3	2L4' T8 28w/ELEE HI/NEW-8'	9	0.6	2,520	OCC SENSOR CEILING	1	435
IN	1956	Albert Payson Terh	Classroom 5	1	4L4' T12 EE/EEMAG-8'	9	1.3	2L4' T8 28w/ELEE HI/NEW-8'	9	0.6	2,520	OCC SENSOR CEILING	1	435
IN	1957	Albert Payson Terh	Classroom 6	1	4L4' T12 EE/EEMAG-8'	9	1.3	2L4' T8 28w/ELEE HI/NEW-8'	9	0.6	2,520	OCC SENSOR CEILING	1	435
IN	1958	Albert Payson Terh	Classroom 7	1	4L4' T12 EE/EEMAG-8'	9	1.3	2L4' T8 28w/ELEE HI/NEW-8'	9	0.6	2,520	OCC SENSOR CEILING	1	435
IN	1959	Albert Payson Terh	Classroom 8	1	4L4' T12 EE/EEMAG-8'	9	1.3	2L4' T8 28w/ELEE HI/NEW-8'	9	0.6	2,520	OCC SENSOR CEILING	1	435
IN	1960	Albert Payson Terh	Classroom 9	1	4L4' T12 EE/EEMAG-8'	9	1.3	2L4' T8 28w/ELEE HI/NEW-8'	9	0.6	2,520	OCC SENSOR CEILING	1	435

In or Out	Line	Building Name	Location	Fl	Pre Fixture Description	Pre Qty	Pre kW	Post Fixture Description	Post Qty	Post kW	Annual Hours	*Control Description*	*Control Qty*	Control kWH Saved
IN	1961	Albert Payson Terh	Hall 4 To Lib	1	3L2' T8 17w/EL	4	0.2	3L2' T8 15w/ELEE LO	4	0.2	3,620	NO RETRO		
IN	1962	Albert Payson Terh	Bath Boys	1	2L4' T12 EE/EEMAG	2	0.1	1L4' T8 28w/ELEE HI/NEW	2	0.1	3,320	OCC SENSOR WALLSWITCH	1	66
IN	1963	Albert Payson Terh	Bath Boys	1	2L4' T8 32w/EL	1	0.1	2L4' T8 28w/ELEE LO/NEW	1	0.0	3,320	INCLUDED ABOVE		42
IN	1964	Albert Payson Terh	Bath Girls	1	2x60W INCANDESCENTS	1	0.1	2L2' T8 15w/ELEE LO/NEW	1	0.0	3,320	OCC SENSOR WALLSWITCH	1	24
IN	1965	Albert Payson Terh	Bath Girls	1	2L4' T12 EE/EEMAG	1	0.1	2L4' T8 28w/ELEE LO/NEW	1	0.0	3,320	INCLUDED ABOVE		42
IN	1966	Albert Payson Terh	Hall 9 To Media	1	3L2' T8 17w/EL	4	0.2	3L2' T8 15w/ELEE LO	4	0.2	3,620	NO RETRO		
IN	1967	Albert Payson Terh	Closet Pto	1	2L4' T12 EE/EEMAG	1	0.1	1L4' T8 28w/ELEE HI/NEW	1	0.0	500	OCC SENSOR WALLSWITCH	1	5
IN	1968	Albert Payson Terh	Library	1	2L4' T12 EE/EEMAG	13	0.9	1L4' T8 28w/ELEE HI/NEW	13	0.4	2,520	NO RETRO		
IN	1969	Albert Payson Terh	Library	1	4L4' T12 EE/EEMAG-8'	15	2.1	4L4' T8 28w/ELEE LO-8'	15	1.2	2,520	NO RETRO		
IN	1970	Albert Payson Terh	Office Librarian	1	4L4' T12 EE/EEMAG	4	0.6	2L4' T8 28w/ELEE HI/RFL	4	0.3	2,320	OCC SENSOR CEILING	2	178
IN	1971	Albert Payson Terh	Office Librarian	1	2L4' T12 U EE/EEMAG	1	0.1	2L2' T8 15w/ELEE HI/RFL	1	0.0	2,320	INCLUDED ABOVE		23
IN	1972	Albert Payson Terh	Closet Server	1	2L4' T12 U EE/EEMAG	2	0.1	2L2' T8 15w/ELEE HI/RFL	2	0.1	500	INCLUDED ABOVE		10
IN	1973	Albert Payson Terh	Bldg Mt Fixture 1	ext	250W METAL HALIDE	3	0.9	133 WATT LED/NEW	3	0.4	4,380	NO RETRO		
IN	1974	Albert Payson Terh	Bldg Mt Fixture 2	ext	150W METAL HALIDE	1	0.2	70 WATT LED/NEW	1	0.1	4,380	NO RETRO		
IN	1975	Albert Payson Terh	Bldg Mt Fixture 3	ext	32W COMPACT SCREWIN	15	0.5	NO RETRO		0.5	4,380	NO RETRO		
IN	1976	Albert Payson Terh	Bldg Mt Fixture 4	ext	50W HI PRESSURE SODI	1	0.1	26 WATT LED/NEW	1	0.0	4,380	NO RETRO		
IN	1977	Albert Payson Terh	Bldg Mt Fixture 5	ext	3 WATT LED	1	0.0	NO RETRO		0.0	4,380	NO RETRO		
IN	1978	Albert Payson Terh	Parking Lot Fixture 6	ext	250W METAL HALIDE	3	0.9	133 WATT LED/NEW	3	0.4	4,380	NO RETRO		
IN	1979	Pines Lake-Elemer	Classroom Portables	1	4L4' T8 32w/EL-8'	12	1.3	2L4' T8 28w/ELEE HI/NEW-8'	12	0.8	2,520	OCC SENSOR CEILING	1	581
IN	1980	Pines Lake-Elemer	Classroom Portables	1	2L4' T8 32w/EL	3	0.2	1L4' T8 28w/ELEE HI/NEW	3	0.1	2,520	INCLUDED ABOVE		75
IN	1981	Pines Lake-Elemer	Bath Portables	1	2L4' T8 32w/EL	1	0.1	1L4' T8 28w/ELEE HI/NEW	1	0.0	3,320	OCC SENSOR WALLSWITCH	1	33
IN	1982	Pines Lake-Elemer	Classroom 32	1	3L4' T12 EE/EEMAG	12	1.3	2L4' T8 28w/ELEE HI/RFL	12	0.8	2,520	OCC SENSOR CEILING	1	581
IN	1983	Pines Lake-Elemer	Classroom 31	1	3L4' T12 EE/EEMAG	12	1.3	2L4' T8 28w/ELEE HI/RFL	12	0.8	2,520	OCC SENSOR CEILING	1	581
IN	1984	Pines Lake-Elemer	Classroom 30	1	3L4' T12 EE/EEMAG	12	1.3	2L4' T8 28w/ELEE HI/RFL	12	0.8	2,520	OCC SENSOR CEILING	1	581
IN	1985	Pines Lake-Elemer	Classroom 33	1	3L4' T12 EE/EEMAG	12	1.3	2L4' T8 28w/ELEE HI/RFL	12	0.8	2,520	OCC SENSOR CEILING	1	581
IN	1986	Pines Lake-Elemer	Classroom 34	1	3L4' T12 EE/EEMAG	12	1.3	2L4' T8 28w/ELEE HI/RFL	12	0.8	2,520	OCC SENSOR CEILING	1	581
IN	1987	Pines Lake-Elemer	Classroom 35	1	3L4' T12 EE/EEMAG	12	1.3	2L4' T8 28w/ELEE HI/RFL	12	0.8	2,520	OCC SENSOR CEILING	1	581
IN	1988	Pines Lake-Elemer	Hall 34 To 32	1	3L4' T12 EE/EEMAG	8	0.9	3L4' T8 28w/ELEE LO	8	0.5	3,620	NO RETRO		
IN	1989	Pines Lake-Elemer	Hall 34 To 32	1	2x18W COMPACT HARDV	1	0.0	NO RETRO		0.0	3,620	NO RETRO		
IN	1990	Pines Lake-Elemer	Classroom 36	1	3L4' T12 EE/EEMAG	12	1.3	2L4' T8 28w/ELEE HI/RFL	12	0.8	2,520	OCC SENSOR CEILING	1	581
IN	1991	Pines Lake-Elemer	Classroom 37A	1	3L4' T12 EE/EEMAG	6	0.7	2L4' T8 28w/ELEE HI/RFL	6	0.4	2,520	OCC SENSOR CEILING	1	290
IN	1992	Pines Lake-Elemer	Classroom 37B	1	3L4' T12 EE/EEMAG	6	0.7	2L4' T8 28w/ELEE HI/RFL	6	0.4	2,520	OCC SENSOR CEILING	1	290
IN	1993	Pines Lake-Elemer	Classroom 38A	1	3L4' T12 EE/EEMAG	6	0.7	2L4' T8 28w/ELEE HI/RFL	6	0.4	2,520	OCC SENSOR CEILING	1	290
IN	1994	Pines Lake-Elemer	Classroom 38B	1	3L4' T12 EE/EEMAG	6	0.7	2L4' T8 28w/ELEE HI/RFL	6	0.4	2,520	OCC SENSOR CEILING	1	290
IN	1995	Pines Lake-Elemer	Mechanical Electrical 1	1	3L4' T12 EE/EEMAG	1	0.1	3L4' T8 28w/ELEE LO	1	0.1	500	OCC SENSOR WALLSWITCH	1	9
IN	1996	Pines Lake-Elemer	Mechanical Electrical 2	1	3L4' T12 EE/EEMAG	1	0.1	3L4' T8 28w/ELEE LO	1	0.1	500	OCC SENSOR WALLSWITCH	1	9
IN	1997	Pines Lake-Elemer	Hall Media Center To 35	1	3L4' T12 EE/EEMAG	11	1.2	3L4' T8 28w/ELEE LO	11	0.7	3,620	NO RETRO		
IN	1998	Pines Lake-Elemer	Hall Media Center To 35	1	3L4' T12 EE/EEMAG	7	0.8	3L4' T8 28w/ELEE LO	7	0.4	3,620	DAYLIGHT HARVESTING SYS	7	798
IN	1999	Pines Lake-Elemer	Hall Media Center To 35	1	2x18W COMPACT HARDV	3	0.1	NO RETRO		0.1	3,620	NO RETRO		
IN	2000	Pines Lake-Elemer	Bath Boys	1	3L4' T8 32w/EL	4	0.4	3L4' T8 28w/ELEE LO	4	0.3	3,320	OCC SENSOR CEIL DT 1GAN	1	251

In or Out	Line	Building Name	Location	Fl	Pre Fixture Description	Pre Qty	Pre kW	Post Fixture Description	Post Qty	Post kW	Annual Hours	*Control Description*	*Control Qty*	Control kWH Saved
IN	2001	Pines Lake-Elemer	Bath Girls	1	3L4' T12 EE/EEMAG	4	0.4	3L4' T8 28w/ELEE LO	4	0.3	3,320	OCC SENSOR CEIL DT 1GAN	1	251
IN	2002	Pines Lake-Elemer	Hall Door 6 To Door 1	1	3L4' T12 EE/EEMAG	13	1.4	3L4' T8 28w/ELEE LO	13	0.8	3,620	NO RETRO		
IN	2003	Pines Lake-Elemer	Hall Door 6 To Door 1	1	18W COMPACT HARDWIR	8	0.2	NO RETRO		0.2	3,620	NO RETRO		
IN	2004	Pines Lake-Elemer	Office Open Main	1	3L4' T12 EE/EEMAG	9	1.0	3L4' T8 28w/ELEE LO	9	0.6	2,720	OCC SENSOR CEILING	2	463
IN	2005	Pines Lake-Elemer	Storage Work Room	1	3L4' T12 EE/EEMAG	2	0.2	3L4' T8 28w/ELEE LO	2	0.1	2,120	OCC SENSOR WALLSWITCH	1	80
IN	2006	Pines Lake-Elemer	Bath Unisex	1	3L4' T12 EE/EEMAG	1	0.1	3L4' T8 28w/ELEE LO	1	0.1	3,320	OCC SENSOR WALLSWITCH	1	63
IN	2007	Pines Lake-Elemer	Office Principal	1	3L4' T12 EE/EEMAG	2	0.2	3L4' T8 28w/ELEE LO	2	0.1	2,320	OCC SENSOR CEILING	1	88
IN	2008	Pines Lake-Elemer	Hall To Gym	1	100W INCANDESCENT	1	0.1	1L4' T8 28w/ELEE HI/NEW	1	0.0	3,620	OCC SENSOR WALLSWITCH	1	36
IN	2009	Pines Lake-Elemer	Gym Main	1	400W METAL HALIDE	8	3.6	172 WATT LED/NEW	8	1.4	2,920	OCC. SENSOR ON HI BAY FI	8	1,205
IN	2010	Pines Lake-Elemer	Stage	1	4L4' T5 HO/EL	3	0.7	NO RETRO		0.7	2,920	NO RETRO		
IN	2011	Pines Lake-Elemer	Stage	1	100W INCANDESCENT	3	0.3	23W COMPACT SI/29712/CF23I	3	0.1	2,920	NO RETRO		
IN	2012	Pines Lake-Elemer	Storage Gym	1	60W INCANDESCENT	4	0.2	2L2' T8 15w/ELEE LO/NEW	4	0.1	500	NO RETRO		
IN	2013	Pines Lake-Elemer	Hall Gym To 25	1	3L4' T12 EE/EEMAG	22	2.4	3L4' T8 28w/ELEE LO	22	1.4	3,620	NO RETRO		
IN	2014	Pines Lake-Elemer	Hall Gym To 25	1	3L4' T12 EE/EEMAG	5	0.6	3L4' T8 28w/ELEE LO	5	0.3	3,620	NO RETRO		
IN	2015	Pines Lake-Elemer	Hall Gym To 25	1	2x18W COMPACT HARDV	2	0.1	NO RETRO		0.1	3,620	OCC SENSOR CEILING	1	83
IN	2016	Pines Lake-Elemer	Classroom 27	1	2L4' T12 EE/EEMAG	15	1.1	1L4' T8 28w/ELEE HI/NEW	15	0.5	2,520	OCC SENSOR CEILING	1	374
IN	2017	Pines Lake-Elemer	Classroom 27	1	2L4' T8 U/EL	4	0.2	2L2' T8 15w/ELEE HI/RFL	4	0.1	2,520	INCLUDED ABOVE		100
IN	2018	Pines Lake-Elemer	Bath 27	1	100W INCANDESCENT	1	0.1	23W COMPACT SI/29712/CF23I	1	0.0	3,320	NO RETRO		
IN	2019	Pines Lake-Elemer	Hall Vestibule	1	60W INCANDESCENT	1	0.1	11W COMPACT SI/29708/CF11I	1	0.0	3,620	NO RETRO		
IN	2020	Pines Lake-Elemer	Classroom 26	1	2L4' T12 EE/EEMAG	15	1.1	1L4' T8 28w/ELEE HI/NEW	15	0.5	2,520	OCC SENSOR CEILING	1	374
IN	2021	Pines Lake-Elemer	Classroom 26	1	2L4' T8 U/EL	4	0.2	2L2' T8 15w/ELEE HI/RFL	4	0.1	2,520	INCLUDED ABOVE		100
IN	2022	Pines Lake-Elemer	Bath 26	1	100W INCANDESCENT	1	0.1	23W COMPACT SI/29712/CF23I	1	0.0	3,320	NO RETRO		
IN	2023	Pines Lake-Elemer	Storage 26	1	2L4' T12 EE/EEMAG	2	0.1	1L4' T8 28w/ELEE HI/NEW	2	0.1	500	NO RETRO		
IN	2024	Pines Lake-Elemer	Cafeteria Seating Area	1	4L4' T12 EE/EEMAG-8'	15	2.1	4L4' T8 28w/ELEE LO-8'	15	1.2	2,720	OCC SENSOR CEILING	1	1,016
IN	2025	Pines Lake-Elemer	Kitchen Prep Area	1	2L4' T12 EE/EEMAG	9	0.6	2L4' T8 28w/ELEE LO/NEW	9	0.4	1,920	NO RETRO		
IN	2026	Pines Lake-Elemer	Closet Clean	1	32W COMPACT SCREWIN	2	0.1	NO RETRO		0.1	500	OCC SENSOR WALLSWITCH	1	10
IN	2027	Pines Lake-Elemer	Storage Dry Goods	1	2L4' T12 EE/EEMAG	1	0.1	1L4' T8 28w/ELEE HI/NEW	1	0.0	500	OCC SENSOR WALLSWITCH	1	5
IN	2028	Pines Lake-Elemer	Office Custodian	1	2L4' T8 32w/EL	2	0.1	1L4' T8 28w/ELEE HI/NEW	2	0.1	2,320	OCC SENSOR WALLSWITCH	1	46
IN	2029	Pines Lake-Elemer	Closet Electrical	1	32W COMPACT SCREWIN	1	0.0	NO RETRO		0.0	500	NO RETRO		
IN	2030	Pines Lake-Elemer	Closet Electrical	1	60W INCANDESCENT	1	0.1	23W COMPACT SI/29712/CF23I	1	0.0	500	NO RETRO		
IN	2031	Pines Lake-Elemer	Lounge Teachers	1	2L4' T8 32w/EL	1	0.1	1L4' T8 28w/ELEE HI/NEW	1	0.0	2,520	OCC SENSOR CORNER MT.	1	25
IN	2032	Pines Lake-Elemer	Lounge Teachers	1	4L4' T8 32w/EL-8'	2	0.2	2L4' T8 28w/ELEE HI/NEW-8'	2	0.1	2,520	INCLUDED ABOVE		97
IN	2033	Pines Lake-Elemer	Classroom 25	1	2L4' T8 32w/EL	15	0.9	1L4' T8 28w/ELEE HI/NEW	15	0.5	2,520	OCC SENSOR CEILING	1	374
IN	2034	Pines Lake-Elemer	Classroom 25	1	2L4' T8 U/EL	2	0.1	2L2' T8 15w/ELEE HI/RFL	2	0.1	2,520	NO RETRO		
IN	2035	Pines Lake-Elemer	Bath 25	1	100W INCANDESCENT	1	0.1	23W COMPACT SI/29712/CF23I	1	0.0	3,320	NO RETRO		
IN	2036	Pines Lake-Elemer	Closet Supplies	1	60W INCANDESCENT	1	0.1	13 WATT LED/NEW	1	0.0	500	NO RETRO		
IN	2037	Pines Lake-Elemer	Classroom 24	1	2L4' T8 32w/EL	15	0.9	1L4' T8 28w/ELEE HI/NEW	15	0.5	2,520	OCC SENSOR CEILING	1	374
IN	2038	Pines Lake-Elemer	Classroom 24	1	2L4' T8 U/EL	2	0.1	2L2' T8 15w/ELEE HI/RFL	2	0.1	2,520	NO RETRO		
IN	2039	Pines Lake-Elemer	Bath 24	1	100W INCANDESCENT	1	0.1	23W COMPACT SI/29712/CF23I	1	0.0	3,320	NO RETRO		
IN	2040	Pines Lake-Elemer	Classroom 23	1	2L4' T8 32w/EL	15	0.9	1L4' T8 28w/ELEE HI/NEW	15	0.5	2,520	OCC SENSOR CEILING	1	374

In or Out	Line	Building Name	Location	Fl	Pre Fixture Description	Pre Qty	Pre kW	Post Fixture Description	Post Qty	Post kW	Annual Hours	*Control Description*	*Control Qty*	Control kWH Saved
IN	2041	Pines Lake-Elemer	Classroom 23	1	2L4' T8 U/EL	2	0.1	2L2' T8 15w/ELEE HI/RFL	2	0.1	2,520	NO RETRO		
IN	2042	Pines Lake-Elemer	Bath 23	1	100W INCANDESCENT	1	0.1	23W COMPACT SI/29712/CF23I	1	0.0	3,320	NO RETRO		
IN	2043	Pines Lake-Elemer	Closet Clean	1	42W COMPACT HARDWIF	1	0.0	NO RETRO		0.0	500	OCC SENSOR WALLSWITCH	1	7
IN	2044	Pines Lake-Elemer	Classroom 22	1	2L4' T8 32w/EL	15	0.9	1L4' T8 28w/ELEE HI/NEW	15	0.5	2,520	OCC SENSOR CEILING	1	374
IN	2045	Pines Lake-Elemer	Classroom 22	1	2L4' T8 U/EL	2	0.1	2L2' T8 15w/ELEE HI/RFL	2	0.1	2,520	NO RETRO		
IN	2046	Pines Lake-Elemer	Bath 22	1	100W INCANDESCENT	1	0.1	23W COMPACT SI/29712/CF23I	1	0.0	3,320	NO RETRO		
IN	2047	Pines Lake-Elemer	Classroom 21	1	2L4' T8 32w/EL	15	0.9	1L4' T8 28w/ELEE HI/NEW	15	0.5	2,520	OCC SENSOR CEILING	1	374
IN	2048	Pines Lake-Elemer	Classroom 21	1	2L4' T8 U/EL	2	0.1	2L2' T8 15w/ELEE HI/RFL	2	0.1	2,520	NO RETRO		
IN	2049	Pines Lake-Elemer	Bath 21	1	100W INCANDESCENT	1	0.1	23W COMPACT SI/29712/CF23I	1	0.0	3,320	NO RETRO		
IN	2050	Pines Lake-Elemer	Bath Staff	1	60W INCANDESCENT	1	0.1	2L2' T8 15w/ELEE LO/NEW	1	0.0	3,320	OCC SENSOR WALLSWITCH	1	24
IN	2051	Pines Lake-Elemer	Classroom 20	1	2L4' T8 32w/EL	15	0.9	1L4' T8 28w/ELEE HI/NEW	15	0.5	2,520	OCC SENSOR CEILING	1	374
IN	2052	Pines Lake-Elemer	Classroom 20	1	2L4' T8 U/EL	2	0.1	2L2' T8 15w/ELEE HI/RFL	2	0.1	2,520	NO RETRO		
IN	2053	Pines Lake-Elemer	Bath 20	1	100W INCANDESCENT	1	0.1	23W COMPACT SI/29712/CF23I	1	0.0	3,320	NO RETRO		
IN	2054	Pines Lake-Elemer	Hall Sgi1 To Classroom 9	1	3L4' T8 32w/EL	16	1.4	3L4' T8 28w/ELEE LO	16	1.0	3,620	NO RETRO		
IN	2055	Pines Lake-Elemer	Hall Sgi1 To Classroom 9	1	1L6' T12 STD/STD	1	0.1	2L3' T8 21w/ELEE/NEW-6'	1	0.0	3,620	NO RETRO		
IN	2056	Pines Lake-Elemer	Mechanical Boiler	1	4L4' T8 32w/EL-8'	1	0.1	4L4' T8 28w/ELEE LO-8'	1	0.1	500	TIMER WALLSWITCH 1GANG	1	12
IN	2057	Pines Lake-Elemer	Mechanical Boiler	1	100W INCANDESCENT	3	0.3	2L2' T8 15w/ELEE LO/NEW	3	0.1	500	INCLUDED ABOVE		11
IN	2058	Pines Lake-Elemer	Hall Boiler	1	42W COMPACT HARDWIF	1	0.0	2L4' T8 28w/ELEE LO/NEW	1	0.0	3,620	OCC SENSOR WALLSWITCH	1	46
IN	2059	Pines Lake-Elemer	Classroom 1 Sgi	1	4L4' T12 EE/EEMAG	6	0.8	2L4' T8 28w/ELEE HI/RFL	6	0.4	2,520	OCC SENSOR CEILING	1	290
IN	2060	Pines Lake-Elemer	Classroom 2	1	4L4' T12 EE/EEMAG	6	0.8	2L4' T8 28w/ELEE HI/RFL	6	0.4	2,520	OCC SENSOR CEILING	1	290
IN	2061	Pines Lake-Elemer	Bath Girls	1	3L4' T8 32w/EL	2	0.2	3L4' T8 28w/ELEE LO	2	0.1	3,320	OCC SENSOR WALLSWITCH	1	125
IN	2062	Pines Lake-Elemer	Classroom 3	1	4L4' T12 EE/EEMAG-8'	9	1.3	2L4' T8 28w/ELEE HI/NEW-8'	9	0.6	2,520	OCC SENSOR CORNER MT.	1	435
IN	2063	Pines Lake-Elemer	Library	1	2L4' T8 U/EL	6	0.4	2L2' T8 15w/ELEE HI/RFL	6	0.2	2,520	NO RETRO		
IN	2064	Pines Lake-Elemer	Library	1	2L4' T12 U EE/EEMAG	19	1.3	2L2' T8 15w/ELEE HI/RFL	19	0.6	2,520	NO RETRO		
IN	2065	Pines Lake-Elemer	Library	1	4L4' T12 EE/EEMAG-8'	8	1.1	4L4' T8 28w/ELEE LO-8'	8	0.7	2,520	NO RETRO		
IN	2066	Pines Lake-Elemer	Library	1	2x18W COMPACT HARDV	10	0.4	NO RETRO		0.4	2,520	NO RETRO		
IN	2067	Pines Lake-Elemer	Library	1	6L4' T12 EE/EEMAG	6	1.3	6L4' T8 28w/ELEE LO	6	0.8	2,520	NO RETRO		
IN	2068	Pines Lake-Elemer	Library	1	3L4' T12 EE/EEMAG	6	0.7	2L4' T8 28w/ELEE HI/RFL	6	0.4	2,520	NO RETRO		
IN	2069	Pines Lake-Elemer	Office Lib	1	3L4' T12 EE/EEMAG	3	0.3	3L4' T8 28w/ELEE LO	3	0.2	2,320	OCC SENSOR CEILING	1	132
IN	2070	Pines Lake-Elemer	Storage Server	1	3L4' T12 EE/EEMAG	2	0.2	3L4' T8 28w/ELEE LO	2	0.1	500	OCC SENSOR WALLSWITCH	1	19
IN	2071	Pines Lake-Elemer	Lounge Staff	1	4L4' T12 EE/EEMAG	8	1.1	2L4' T8 28w/ELEE HI/RFL	8	0.5	2,520	OCC SENSOR CEILING	2	387
IN	2072	Pines Lake-Elemer	Storage Lounge	1	60W INCANDESCENT	1	0.1	23W COMPACT SI/29712/CF23I	1	0.0	500	NO RETRO		
IN	2073	Pines Lake-Elemer	Bath Staff	1	4L4' T12 EE/EEMAG	1	0.1	2L4' T8 28w/ELEE HI/RFL	1	0.1	3,320	OCC SENSOR WALLSWITCH	1	64
IN	2074	Pines Lake-Elemer	Storage Tables	1	4L4' T12 EE/EEMAG-8'	2	0.3	2L4' T8 28w/ELEE HI/NEW-8'	2	0.1	500	TIMER WALLSWITCH 1GANG	1	19
IN	2075	Pines Lake-Elemer	Storage Tables	1	60W INCANDESCENT	1	0.1	23W COMPACT SI/29712/CF23I	1	0.0	500	INCLUDED ABOVE		3
IN	2076	Pines Lake-Elemer	Closet Clean	1	42W COMPACT HARDWIF	1	0.0	NO RETRO		0.0	500	OCC SENSOR WALLSWITCH	1	7
IN	2077	Pines Lake-Elemer	Bath Boys	1	3L4' T8 32w/EL	2	0.2	3L4' T8 28w/ELEE LO	2	0.1	3,320	OCC SENSOR WALLSWITCH	1	125
IN	2078	Pines Lake-Elemer	Office Nurse	1	4L4' T8 32w/EL-8'	2	0.2	2L4' T8 28w/ELEE HI/NEW-8'	2	0.1	2,320	OCC SENSOR CEILING	1	89
IN	2079	Pines Lake-Elemer	Bath Nurse	1	60W INCANDESCENT	1	0.1	2L2' T8 15w/ELEE LO/NEW	1	0.0	3,320	OCC SENSOR WALLSWITCH	1	24
IN	2080	Pines Lake-Elemer	Classroom 13 Sgi	1	4L4' T8 32w/EL-8'	6	0.7	2L4' T8 28w/ELEE HI/NEW-8'	6	0.4	2,520	OCC SENSOR CORNER MT.	1	290

In or Out	Line	Building Name	Location	Fl	Pre Fixture Description	Pre Qty	Pre kW	Post Fixture Description	Post Qty	Post kW	Annual Hours	*Control Description*	*Control Qty*	Control kWH Saved
IN	2081	Pines Lake-Elemer	Classroom 6	1	4L4' T8 32w/EL-8'	5	0.6	2L4' T8 28w/ELEE HI/NEW-8'	5	0.3	2,520	OCC SENSOR CEILING	1	242
IN	2082	Pines Lake-Elemer	Classroom 6	1	4L4' T12 EE/EEMAG-8'	4	0.6	2L4' T8 28w/ELEE HI/NEW-8'	4	0.3	2,520	INCLUDED ABOVE		194
IN	2083	Pines Lake-Elemer	Classroom 7	1	4L4' T8 32w/EL-8'	5	0.6	2L4' T8 28w/ELEE HI/NEW-8'	5	0.3	2,520	OCC SENSOR CEILING	1	242
IN	2084	Pines Lake-Elemer	Classroom 7	1	4L4' T12 EE/EEMAG-8'	4	0.6	2L4' T8 28w/ELEE HI/NEW-8'	4	0.3	2,520	INCLUDED ABOVE		194
IN	2085	Pines Lake-Elemer	Classroom 8	1	4L4' T8 32w/EL-8'	5	0.6	2L4' T8 28w/ELEE HI/NEW-8'	5	0.3	2,520	OCC SENSOR CEILING	1	242
IN	2086	Pines Lake-Elemer	Classroom 8	1	4L4' T12 EE/EEMAG-8'	4	0.6	2L4' T8 28w/ELEE HI/NEW-8'	4	0.3	2,520	INCLUDED ABOVE		194
IN	2087	Pines Lake-Elemer	Classroom 9	1	4L4' T8 32w/EL-8'	5	0.6	2L4' T8 28w/ELEE HI/NEW-8'	5	0.3	2,520	OCC SENSOR CEILING	1	242
IN	2088	Pines Lake-Elemer	Classroom 9	1	4L4' T12 EE/EEMAG-8'	4	0.6	2L4' T8 28w/ELEE HI/NEW-8'	4	0.3	2,520	INCLUDED ABOVE		194
IN	2089	Pines Lake-Elemer	Classroom 10	1	4L4' T8 32w/EL-8'	5	0.6	2L4' T8 28w/ELEE HI/NEW-8'	5	0.3	2,520	OCC SENSOR CEILING	1	242
IN	2090	Pines Lake-Elemer	Classroom 10	1	4L4' T12 EE/EEMAG-8'	4	0.6	2L4' T8 28w/ELEE HI/NEW-8'	4	0.3	2,520	INCLUDED ABOVE		194
IN	2091	Pines Lake-Elemer	Classroom 11	1	4L4' T8 32w/EL-8'	5	0.6	2L4' T8 28w/ELEE HI/NEW-8'	5	0.3	2,520	OCC SENSOR CEILING	1	242
IN	2092	Pines Lake-Elemer	Classroom 11	1	4L4' T12 EE/EEMAG-8'	4	0.6	2L4' T8 28w/ELEE HI/NEW-8'	4	0.3	2,520	INCLUDED ABOVE		194
IN	2093	Pines Lake-Elemer	Classroom 12	1	4L4' T8 32w/EL-8'	5	0.6	2L4' T8 28w/ELEE HI/NEW-8'	5	0.3	2,520	OCC SENSOR CEILING	1	242
IN	2094	Pines Lake-Elemer	Classroom 12	1	4L4' T12 EE/EEMAG-8'	4	0.6	2L4' T8 28w/ELEE HI/NEW-8'	4	0.3	2,520	INCLUDED ABOVE		194
IN	2095	Pines Lake-Elemer	Bldg Mt Fixture 1	ext	100W HI PRESSURE SOD	2	0.3	50 WATT LED/NEW	2	0.1	4,380	NO RETRO		
IN	2096	Pines Lake-Elemer	Bldg Mt Fixture 2	ext	50W HI PRESSURE SODI	8	0.5	26 WATT LED/NEW	8	0.2	4,380	NO RETRO		
IN	2097	Pines Lake-Elemer	Bldg Mt Fixture 3	ext	250W HI PRESSURE SOD	11	3.2	133 WATT LED/NEW	11	1.5	4,380	NO RETRO		
IN	2098	Pines Lake-Elemer	Bldg Mt Fixture 4	ext	150W HI PRESSURE SOD	3	0.6	70 WATT LED/NEW	3	0.2	4,380	NO RETRO		
IN	2099	Pines Lake-Elemer	Bldg Mt Fixture 5	ext	150W HI PRESSURE SOD	3	0.6	70 WATT LED/NEW	3	0.2	4,380	NO RETRO		
IN	2100	Pines Lake-Elemer	Bldg Mt Fixture 6	ext	50W HI PRESSURE SODI	2	0.1	26 WATT LED/NEW	2	0.1	4,380	NO RETRO		
IN	2101	Pines Lake-Elemer	Bldg Mt Fixture 7	ext	2x18W COMPACT HARDV	1	0.0	NO RETRO		0.0	4,380	NO RETRO		
IN	2102	Pines Lake-Elemer	Bldg Mt Fixture 8	ext	250W HI PRESSURE SOD	1	0.3	133 WATT LED/NEW	1	0.1	4,380	NO RETRO		
IN	2103	Pines Lake-Elemer	Bldg Mt Fixture 9 (2)	ext	250W METAL HALIDE	4	1.2	133 WATT LED/NEW	4	0.5	4,380	NO RETRO		
IN	2104	Pines Lake-Elemer	Bldg Mt Fixture 10	ext	72W COMPACT SCREWIN	1	0.1	26 WATT LED/NEW	1	0.0	4,380	NO RETRO		
IN	2105	Pines Lake-Elemer	Bldg Mt Fixture 11	ext	3x13W COMPACT HARDV	7	0.3	NO RETRO		0.3	4,380	NO RETRO		
IN	2106	Anthony Wayne-Mi	Stair 4	s	2x18W COMPACT HARDV	8	0.3	NO RETRO		0.3	3,640	NO RETRO		
IN	2107	Anthony Wayne-Mi	Classroom 227	2	3L4' T8 32w/EL	16	1.4	3L4' T8 28w/ELEE LO (1L&2L BA	16	1.0	1,988	ALREADY EXISTS		
IN	2108	Anthony Wayne-Mi	Classroom 227	2	3L2' T8 17w/EL	4	0.2	3L2' T8 15w/ELEE LO	4	0.2	1,988	ALREADY EXISTS		
IN	2109	Anthony Wayne-Mi	Classroom 226	2	3L2' F40 BIAX/EL	2	0.2	2L2' T8 15w/ELEE HI/RFL	2	0.1	1,988	ALREADY EXISTS		
IN	2110	Anthony Wayne-Mi	Classroom 226	2	3L4' T8 32w/EL	21	1.8	2L4' T8 28w/ELEE HI/RFL	21	1.3	1,988	ALREADY EXISTS		
IN	2111	Anthony Wayne-Mi	Classroom 225	2	3L4' T8 32w/EL	4	0.4	2L4' T8 28w/ELEE HI/RFL	4	0.3	1,988	ALREADY EXISTS		
IN	2112	Anthony Wayne-Mi	Classroom 224	2	3L4' T8 32w/EL	4	0.4	2L4' T8 28w/ELEE HI/RFL	4	0.3	1,988	ALREADY EXISTS		
IN	2113	Anthony Wayne-Mi	Classroom 222	2	3L4' T8 32w/EL	10	0.9	2L4' T8 28w/ELEE HI/RFL	10	0.6	1,988	ALREADY EXISTS		
IN	2114	Anthony Wayne-Mi	Classroom 222	2	3L2' F40 BIAX/EL	2	0.2	2L2' T8 15w/ELEE HI/RFL	2	0.1	1,988	ALREADY EXISTS		
IN	2115	Anthony Wayne-Mi	Classroom 223	2	3L4' T8 32w/EL	10	0.9	2L4' T8 28w/ELEE HI/RFL	10	0.6	1,988	ALREADY EXISTS		
IN	2116	Anthony Wayne-Mi	Classroom 223	2	3L2' F40 BIAX/EL	2	0.2	2L2' T8 15w/ELEE HI/RFL	2	0.1	1,988	ALREADY EXISTS		
IN	2117	Anthony Wayne-Mi	Classroom 221	2	3L4' T8 32w/EL	10	0.9	2L4' T8 28w/ELEE HI/RFL	10	0.6	1,988	ALREADY EXISTS		
IN	2118	Anthony Wayne-Mi	Classroom 221	2	3L2' F40 BIAX/EL	2	0.2	2L2' T8 15w/ELEE HI/RFL	2	0.1	1,988	ALREADY EXISTS		
IN	2119	Anthony Wayne-Mi	Classroom 220	2	3L4' T8 32w/EL	10	0.9	2L4' T8 28w/ELEE HI/RFL	10	0.6	1,988	ALREADY EXISTS		
IN	2120	Anthony Wayne-Mi	Classroom 220	2	3L2' F40 BIAX/EL	2	0.2	2L2' T8 15w/ELEE HI/RFL	2	0.1	1,988	ALREADY EXISTS		

In or Out	Line	Building Name	Location	Fl	Pre Fixture Description	Pre Qty	Pre kW	Post Fixture Description	Post Qty	Post kW	Annual Hours	*Control Description*	*Control Qty*	Control kWH Saved
IN	2121	Anthony Wayne-Mi	Classroom 219	2	3L4' T8 32w/EL	10	0.9	2L4' T8 28w/ELEE HI/RFL	10	0.6	1,988	ALREADY EXISTS		
IN	2122	Anthony Wayne-Mi	Classroom 219	2	3L2' F40 BIAX/EL	2	0.2	2L2' T8 15w/ELEE HI/RFL	2	0.1	1,988	ALREADY EXISTS		
IN	2123	Anthony Wayne-Mi	Classroom 218	2	3L4' T8 32w/EL	10	0.9	2L4' T8 28w/ELEE HI/RFL	10	0.6	1,988	ALREADY EXISTS		
IN	2124	Anthony Wayne-Mi	Classroom 218	2	3L2' F40 BIAX/EL	2	0.2	2L2' T8 15w/ELEE HI/RFL	2	0.1	1,988	ALREADY EXISTS		
IN	2125	Anthony Wayne-Mi	Hall 226 To 218	2	3L4' T8 32w/EL	9	0.8	3L4' T8 28w/ELEE LO	9	0.6	2,548	ALREADY EXISTS		
IN	2126	Anthony Wayne-Mi	Hall 226 To 218	2	4L4' T8 32w/EL	3	0.3	4L4' T8 28w/ELEE LO	3	0.2	2,548	ALREADY EXISTS		
IN	2127	Anthony Wayne-Mi	Hall 226 To 218	2	2x18W COMPACT HARDV	12	0.5	NO RETRO		0.5	2,548	ALREADY EXISTS		
IN	2128	Anthony Wayne-Mi	Storage 218 Dr Data	2	2L4' T8 32w/EL	3	0.2	1L4' T8 28w/ELEE HI/NEW	3	0.1	500	TIMER WALLSWITCH 1GANG	1	15
IN	2129	Anthony Wayne-Mi	Stair 3	s	2x18W COMPACT HARDV	13	0.5	NO RETRO		0.5	3,640	NO RETRO		
IN	2130	Anthony Wayne-Mi	Bath Women	2	3L2' F40 BIAX/EL	3	0.3	3L2' F40BIAX/EL28W	3	0.3	2,548	ALREADY EXISTS		
IN	2131	Anthony Wayne-Mi	Bath Women	2	2L2' T8 17w/EL	1	0.0	2L2' T8 15w/ELEE LO/NEW	1	0.0	2,548	ALREADY EXISTS		
IN	2132	Anthony Wayne-Mi	Storage 219	2	2L4' T8 32w/EL	1	0.1	1L4' T8 28w/ELEE HI/NEW	1	0.0	500	NO RETRO		
IN	2133	Anthony Wayne-Mi	Bath Girls	2	3L4' T8 32w/EL	3	0.3	3L4' T8 28w/ELEE LO	3	0.2	2,548	ALREADY EXISTS		
IN	2134	Anthony Wayne-Mi	Bath Girls	2	2L4' T8 32w/EL	2	0.1	2L4' T8 28w/ELEE LO/NEW	2	0.1	2,548	ALREADY EXISTS		
IN	2135	Anthony Wayne-Mi	Storage 214 Sc	2	3L4' T8 32w/EL	2	0.2	3L4' T8 28w/ELEE LO	2	0.1	350	ALREADY EXISTS		
IN	2136	Anthony Wayne-Mi	Closet Clean	2	3L4' T8 32w/EL	1	0.1	3L4' T8 28w/ELEE LO	1	0.1	350	ALREADY EXISTS		
IN	2137	Anthony Wayne-Mi	Classroom 217	2	3L4' T8 32w/EL	12	1.1	2L4' T8 28w/ELEE HI/RFL	12	0.8	1,988	ALREADY EXISTS		
IN	2138	Anthony Wayne-Mi	Classroom 215	2	3L4' T8 32w/EL	4	0.4	2L4' T8 28w/ELEE HI/RFL	4	0.3	1,988	ALREADY EXISTS		
IN	2139	Anthony Wayne-Mi	Hall 281 Dr To 204	2	1L2' F40 BIAX/EL	36	1.7	1L2' F40BIAX/EL28W	36	1.2	3,640	NO RETRO		
IN	2140	Anthony Wayne-Mi	Hall 281 Dr To 204	2	2x18W COMPACT HARDV	4	0.2	NO RETRO		0.2	3,640	NO RETRO		
IN	2141	Anthony Wayne-Mi	Hall 281 Dr To 204	2	4L4' T8 32w/EL	1	0.1	4L4' T8 28w/ELEE LO	1	0.1	3,640	NO RETRO		
IN	2142	Anthony Wayne-Mi	Classroom 214	2	3L4' T8 32w/EL	15	1.3	2L4' T8 28w/ELEE HI/RFL	15	1.0	1,988	ALREADY EXISTS		
IN	2143	Anthony Wayne-Mi	Storage 214Sc	2	3L4' T8 32w/EL	2	0.2	3L4' T8 28w/ELEE LO	2	0.1	350	ALREADY EXISTS		
IN	2144	Anthony Wayne-Mi	Office Prep Room	2	3L4' T8 32w/EL	3	0.3	3L4' T8 28w/ELEE LO (1L&2L BA	3	0.2	1,988	ALREADY EXISTS		
IN	2145	Anthony Wayne-Mi	Classroom 201	2	3L4' T8 32w/EL	15	1.3	2L4' T8 28w/ELEE HI/RFL	15	1.0	1,988	ALREADY EXISTS		
IN	2146	Anthony Wayne-Mi	Storage 201Sc	2	3L2' F40 BIAX/EL	1	0.1	3L2' F40BIAX/EL28W	1	0.1	350	ALREADY EXISTS		
IN	2147	Anthony Wayne-Mi	Hall Rotunda	2	1L2' 24W T5HO/EL	35	1.0	NO RETRO		1.0	2,548	ALREADY EXISTS		
IN	2148	Anthony Wayne-Mi	Storage 201	2	3L4' T8 32w/EL	2	0.2	3L4' T8 28w/ELEE LO	2	0.1	350	ALREADY EXISTS		
IN	2149	Anthony Wayne-Mi	Classroom 216	2	3L4' T8 32w/EL	9	0.8	2L4' T8 28w/ELEE HI/RFL	9	0.6	1,988	ALREADY EXISTS		
IN	2150	Anthony Wayne-Mi	Classroom 216	2	3L2' F40 BIAX/EL	1	0.1	2L2' T8 15w/ELEE HI/RFL	1	0.0	1,988	ALREADY EXISTS		
IN	2151	Anthony Wayne-Mi	Office Breakout Room	2	100W METAL HALIDE	4	0.5	NO RETRO		0.5	2,840	#N/A	#N/A	#N/A
IN	2152	Anthony Wayne-Mi	Office Breakout Room	2	150W METAL HALIDE	4	0.8	22 WATT LED/KIT	4	0.1	2,840	NO RETRO		
IN	2153	Anthony Wayne-Mi	Classroom 200	2	3L4' T8 32w/EL	9	0.8	2L4' T8 28w/ELEE HI/RFL	9	0.6	1,988	ALREADY EXISTS		
IN	2154	Anthony Wayne-Mi	Classroom 200	2	3L2' F40 BIAX/EL	1	0.1	2L2' T8 15w/ELEE HI/RFL	1	0.0	1,988	ALREADY EXISTS		
IN	2155	Anthony Wayne-Mi	Classroom 203	2	3L4' T8 32w/EL	4	0.4	2L4' T8 28w/ELEE HI/RFL	4	0.3	1,988	ALREADY EXISTS		
IN	2156	Anthony Wayne-Mi	Storage 202	2	3L4' T8 32w/EL	1	0.1	3L4' T8 28w/ELEE LO	1	0.1	350	ALREADY EXISTS		
IN	2157	Anthony Wayne-Mi	Classroom 202	2	3L4' T8 32w/EL	12	1.1	2L4' T8 28w/ELEE HI/RFL	12	0.8	1,988	ALREADY EXISTS		
IN	2158	Anthony Wayne-Mi	Bath Boys	2	3L4' T8 32w/EL	4	0.4	3L4' T8 28w/ELEE LO	4	0.3	2,548	ALREADY EXISTS		
IN	2159	Anthony Wayne-Mi	Bath Boys	2	2L4' T8 32w/EL	2	0.1	2L4' T8 28w/ELEE LO/NEW	2	0.1	2,548	ALREADY EXISTS		
IN	2160	Anthony Wayne-Mi	Storage 201Sc	2	3L4' T8 32w/EL	2	0.2	2L4' T8 28w/ELEE HI/RFL	2	0.1	350	ALREADY EXISTS		

In or Out	Line	Building Name	Location	Fl	Pre Fixture Description	Pre Qty	Pre kW	Post Fixture Description	Post Qty	Post kW	Annual Hours	*Control Description*	*Control Qty*	Control kWH Saved
IN	2161	Anthony Wayne-Mi	Bath Men	2	3L2' F40 BIAX/EL	3	0.3	3L2' F40BIAX/EL28W	3	0.3	2,548	ALREADY EXISTS		
IN	2162	Anthony Wayne-Mi	Bath Men	2	2L2' T8 17w/EL	1	0.0	2L2' T8 15w/ELEE LO/NEW	1	0.0	2,548	ALREADY EXISTS		
IN	2163	Anthony Wayne-Mi	Stair 2	s	2x18W COMPACT HARDV	13	0.5	NO RETRO		0.5	3,640	NO RETRO		
IN	2164	Anthony Wayne-Mi	Mechanical 204 Me	2	2L4' T8 32w/EL	3	0.2	1L4' T8 28w/ELEE HI/NEW	3	0.1	500	NO RETRO		
IN	2165	Anthony Wayne-Mi	Hall 204 Me To Stair 1	2	3L4' T8 32w/EL	9	0.8	3L4' T8 28w/ELEE LO	9	0.6	2,548	ALREADY EXISTS		
IN	2166	Anthony Wayne-Mi	Hall 204 Me To Stair 1	2	4L4' T8 32w/EL	3	0.3	4L4' T8 28w/ELEE LO	3	0.2	2,548	ALREADY EXISTS		
IN	2167	Anthony Wayne-Mi	Hall 204 Me To Stair 1	2	2x18W COMPACT HARDV	10	0.4	NO RETRO		0.4	2,548	ALREADY EXISTS		
IN	2168	Anthony Wayne-Mi	Classroom 205	2	3L4' T8 32w/EL	11	1.0	2L4' T8 28w/ELEE HI/RFL	11	0.7	1,988	ALREADY EXISTS		
IN	2169	Anthony Wayne-Mi	Classroom 205	2	3L2' F40 BIAX/EL	1	0.1	2L2' T8 15w/ELEE HI/RFL	1	0.0	1,988	ALREADY EXISTS		
IN	2170	Anthony Wayne-Mi	Storage 205 Sc	2	3L4' T8 32w/EL	1	0.1	3L4' T8 28w/ELEE LO	1	0.1	350	ALREADY EXISTS		
IN	2171	Anthony Wayne-Mi	Classroom 204	2	3L4' T8 32w/EL	10	0.9	2L4' T8 28w/ELEE HI/RFL	10	0.6	1,988	ALREADY EXISTS		
IN	2172	Anthony Wayne-Mi	Classroom 204	2	3L2' F40 BIAX/EL	2	0.2	2L2' T8 15w/ELEE HI/RFL	2	0.1	1,988	ALREADY EXISTS		
IN	2173	Anthony Wayne-Mi	Classroom 207	2	3L4' T8 32w/EL	11	1.0	2L4' T8 28w/ELEE HI/RFL	11	0.7	1,988	ALREADY EXISTS		
IN	2174	Anthony Wayne-Mi	Classroom 207	2	3L2' F40 BIAX/EL	1	0.1	2L2' T8 15w/ELEE HI/RFL	1	0.0	1,988	ALREADY EXISTS		
IN	2175	Anthony Wayne-Mi	Classroom 204	2	3L4' T8 32w/EL	9	0.8	2L4' T8 28w/ELEE HI/RFL	9	0.6	1,988	ALREADY EXISTS		
IN	2176	Anthony Wayne-Mi	Classroom 204	2	3L2' F40 BIAX/EL	2	0.2	2L2' T8 15w/ELEE HI/RFL	2	0.1	1,988	ALREADY EXISTS		
IN	2177	Anthony Wayne-Mi	Classroom 208	2	3L4' T8 32w/EL	11	1.0	2L4' T8 28w/ELEE HI/RFL	11	0.7	1,988	ALREADY EXISTS		
IN	2178	Anthony Wayne-Mi	Classroom 208	2	3L2' F40 BIAX/EL	1	0.1	2L2' T8 15w/ELEE HI/RFL	1	0.0	1,988	ALREADY EXISTS		
IN	2179	Anthony Wayne-Mi	Classroom 209	2	3L4' T8 32w/EL	10	0.9	2L4' T8 28w/ELEE HI/RFL	10	0.6	1,988	ALREADY EXISTS		
IN	2180	Anthony Wayne-Mi	Classroom 209	2	3L2' F40 BIAX/EL	2	0.2	2L2' T8 15w/ELEE HI/RFL	2	0.1	1,988	ALREADY EXISTS		
IN	2181	Anthony Wayne-Mi	Classroom 211	2	3L4' T8 32w/EL	4	0.4	2L4' T8 28w/ELEE HI/RFL	4	0.3	1,988	ALREADY EXISTS		
IN	2182	Anthony Wayne-Mi	Classroom 210	2	3L4' T8 32w/EL	4	0.4	2L4' T8 28w/ELEE HI/RFL	4	0.3	1,988	ALREADY EXISTS		
IN	2183	Anthony Wayne-Mi	Classroom 212	2	3L4' T8 32w/EL	15	1.3	2L4' T8 28w/ELEE HI/RFL	15	1.0	1,988	ALREADY EXISTS		
IN	2184	Anthony Wayne-Mi	Classroom 212	2	3L2' F40 BIAX/EL	1	0.1	2L2' T8 15w/ELEE HI/RFL	1	0.0	1,988	ALREADY EXISTS		
IN	2185	Anthony Wayne-Mi	Storage 212 Sc	2	3L4' T8 32w/EL	2	0.2	2L4' T8 28w/ELEE HI/RFL	2	0.1	350	ALREADY EXISTS		
IN	2186	Anthony Wayne-Mi	Classroom 213	2	3L4' T8 32w/EL	15	1.3	2L4' T8 28w/ELEE HI/RFL	15	1.0	1,988	ALREADY EXISTS		
IN	2187	Anthony Wayne-Mi	Classroom 213	2	3L2' F40 BIAX/EL	1	0.1	2L2' T8 15w/ELEE HI/RFL	1	0.0	1,988	ALREADY EXISTS		
IN	2188	Anthony Wayne-Mi	Office 212 Ao	2	3L4' T8 32w/EL	2	0.2	3L4' T8 28w/ELEE LO (1L&2L BA	2	0.1	1,988	ALREADY EXISTS		
IN	2189	Anthony Wayne-Mi	Stair 1	s	2x18W COMPACT HARDV	8	0.3	NO RETRO		0.3	3,640	NO RETRO		
IN	2190	Anthony Wayne-Mi	Office 108 Ao	1	3L4' T8 32w/EL	2	0.2	3L4' T8 28w/ELEE LO (1L&2L BA	2	0.1	1,988	ALREADY EXISTS		
IN	2191	Anthony Wayne-Mi	Classroom 108	1	6L4' T8 32w/EL-8'	12	2.2	6L4' T8 28w/ELEE LO-8'	12	1.5	1,988	ALREADY EXISTS		
IN	2192	Anthony Wayne-Mi	Office 108 P3	1	3L4' T8 32w/EL	2	0.2	3L4' T8 28w/ELEE LO (1L&2L BA	2	0.1	1,988	ALREADY EXISTS		
IN	2193	Anthony Wayne-Mi	Office 108 P2	1	3L4' T8 32w/EL	2	0.2	3L4' T8 28w/ELEE LO (1L&2L BA	2	0.1	1,988	ALREADY EXISTS		
IN	2194	Anthony Wayne-Mi	Office 108 P1	1	3L4' T8 32w/EL	2	0.2	3L4' T8 28w/ELEE LO (1L&2L BA	2	0.1	1,988	ALREADY EXISTS		
IN	2195	Anthony Wayne-Mi	Storage 108 Sa	1	2L4' T8 32w/EL	1	0.1	1L4' T8 28w/ELEE HI/NEW	1	0.0	350	ALREADY EXISTS		
IN	2196	Anthony Wayne-Mi	Storage 108 Sb	1	2L4' T8 32w/EL	1	0.1	1L4' T8 28w/ELEE HI/NEW	1	0.0	350	ALREADY EXISTS		
IN	2197	Anthony Wayne-Mi	Storage 108 Sc	1	2L4' T8 32w/EL	1	0.1	1L4' T8 28w/ELEE HI/NEW	1	0.0	350	ALREADY EXISTS		
IN	2198	Anthony Wayne-Mi	Classroom 109	1	6L4' T8 32w/EL-8'	12	2.2	6L4' T8 28w/ELEE LO-8'	12	1.5	1,988	ALREADY EXISTS		
IN	2199	Anthony Wayne-Mi	Hall 109 To Cafetorium	1	3L4' T8 32w/EL	3	0.3	2L4' T8 28w/ELEE HI/RFL	3	0.2	3,640	NO RETRO		
IN	2200	Anthony Wayne-Mi	Hall 109 To Cafetorium	1	3L4' T8 32w/EL	4	0.4	2L4' T8 28w/ELEE HI/RFL	4	0.3	3,640	DAYLIGHT HARVESTING SY	4	466

In or Out	Line	Building Name	Location	Fl	Pre Fixture Description	Pre Qty	Pre kW	Post Fixture Description	Post Qty	Post kW	Annual Hours	*Control Description*	*Control Qty*	Control kWH Saved
IN	2201	Anthony Wayne-Mi	Hall 109 To Cafetorium	1	2L4' T8 28w/ELEE	2	0.1	2L4' T8 28w/ELEE LO	2	0.1	3,640	NO RETRO		
IN	2202	Anthony Wayne-Mi	Hall 109 To Cafetorium	1	3L4' T8 32w/EL	3	0.3	2L4' T8 28w/ELEE HI/RFL	3	0.2	3,640	NO RETRO		
IN	2203	Anthony Wayne-Mi	Lounge Staff	1	3L4' T8 32w/EL	9	0.8	3L4' T8 28w/ELEE LO (1L&2L BA	9	0.6	1,764	ALREADY EXISTS		
IN	2204	Anthony Wayne-Mi	Bath Boys	1	2x13W COMPACT HARDV	1	0.0	NO RETRO		0.0	2,548	ALREADY EXISTS		
IN	2205	Anthony Wayne-Mi	Bath Boys	1	3L4' T8 32w/EL	2	0.2	3L4' T8 28w/ELEE LO	2	0.1	2,548	ALREADY EXISTS		
IN	2206	Anthony Wayne-Mi	Bath Girls	1	2x13W COMPACT HARDV	1	0.0	NO RETRO		0.0	2,548	ALREADY EXISTS		
IN	2207	Anthony Wayne-Mi	Bath Girls	1	3L4' T8 32w/EL	2	0.2	3L4' T8 28w/ELEE LO	2	0.1	2,548	ALREADY EXISTS		
IN	2208	Anthony Wayne-Mi	Cafeteria Seating Area	1	6L4' T8 32w/EL-8'	30	5.4	6L4' T8 28w/ELEE LO-8'	30	3.8	3,440	NO RETRO		
IN	2209	Anthony Wayne-Mi	Cafeteria Seating Area	1	150W INCANDESCENT	8	1.2	NO RETRO		1.2	3,440	NO RETRO		
IN	2210	Anthony Wayne-Mi	Office 128 S1	1	3L4' T8 32w/EL	4	0.4	3L4' T8 28w/ELEE LO	4	0.3	1,988	ALREADY EXISTS		
IN	2211	Anthony Wayne-Mi	Kitchen 131 Cf	1	2x18W COMPACT HARDV	15	0.6	NO RETRO		0.6	2,840	NO RETRO		
IN	2212	Anthony Wayne-Mi	Kitchen 131 Cf	1	3L4' T8 32w/EL	9	0.8	3L4' T8 28w/ELEE LO	9	0.6	2,840	NO RETRO		
IN	2213	Anthony Wayne-Mi	Kitchen Grease Hood	1	100W INCANDESCENT	8	0.8	23W COMPACT SI/29712/CF23I	8	0.2	2,840	NO RETRO		
IN	2214	Anthony Wayne-Mi	Kitchen Grease Hood	1	3L2' F40 BIAX/EL	4	0.4	3L2' F40BIAX/EL28W	4	0.4	2,840	NO RETRO		
IN	2215	Anthony Wayne-Mi	Closet 131 Sc	1	2x18W COMPACT HARDV	1	0.0	NO RETRO		0.0	350	ALREADY EXISTS		
IN	2216	Anthony Wayne-Mi	Bath By 130 Ao	1	3L2' F40 BIAX/EL	1	0.1	3L2' F40BIAX/EL28W	1	0.1	2,548	ALREADY EXISTS		
IN	2217	Anthony Wayne-Mi	Office 130 Ao	1	3L4' T8 32w/EL	2	0.2	3L4' T8 28w/ELEE LO (1L&2L BA	2	0.1	1,988	ALREADY EXISTS		
IN	2218	Anthony Wayne-Mi	Stage 130 Ao	1	250W METAL HALIDE	3	0.9	4L4' T8 28w/ELEE HI/NEW-8'	3	0.4	3,240	NO RETRO		
IN	2219	Anthony Wayne-Mi	Stage 130 Ao	1	23W COMPACT HARDWIF	4	0.1	NO RETRO		0.1	3,240	NO RETRO		
IN	2220	Anthony Wayne-Mi	Storage Video	1	2L4' T8 32w/EL	2	0.1	2L4' T8 28w/ELEE LO	2	0.1	350	ALREADY EXISTS		
IN	2221	Anthony Wayne-Mi	Mechanical 106 Fire Alarm	1	2L4' T8 32w/EL	8	0.5	1L4' T8 28w/ELEE HI/NEW	8	0.3	500	NO RETRO		
IN	2222	Anthony Wayne-Mi	Classroom 107	1	3L4' T8 32w/EL	11	1.0	2L4' T8 28w/ELEE HI/RFL	11	0.7	1,988	ALREADY EXISTS		
IN	2223	Anthony Wayne-Mi	Classroom 107	1	3L2' F40 BIAX/EL	1	0.1	2L2' T8 15w/ELEE HI/RFL	1	0.0	1,988	ALREADY EXISTS		
IN	2224	Anthony Wayne-Mi	Classroom 104	1	3L4' T8 32w/EL	11	1.0	2L4' T8 28w/ELEE HI/RFL	11	0.7	1,988	ALREADY EXISTS		
IN	2225	Anthony Wayne-Mi	Classroom 104	1	3L2' F40 BIAX/EL	1	0.1	2L2' T8 15w/ELEE HI/RFL	1	0.0	1,988	ALREADY EXISTS		
IN	2226	Anthony Wayne-Mi	Classroom 105	1	3L4' T8 32w/EL	10	0.9	2L4' T8 28w/ELEE HI/RFL	10	0.6	1,988	ALREADY EXISTS		
IN	2227	Anthony Wayne-Mi	Classroom 105	1	3L2' F40 BIAX/EL	2	0.2	2L2' T8 15w/ELEE HI/RFL	2	0.1	1,988	ALREADY EXISTS		
IN	2228	Anthony Wayne-Mi	Classroom 103	1	3L4' T8 32w/EL	10	0.9	2L4' T8 28w/ELEE HI/RFL	10	0.6	1,988	ALREADY EXISTS		
IN	2229	Anthony Wayne-Mi	Classroom 103	1	3L2' F40 BIAX/EL	2	0.2	2L2' T8 15w/ELEE HI/RFL	2	0.1	1,988	ALREADY EXISTS		
IN	2230	Anthony Wayne-Mi	Classroom 102	1	3L4' T8 32w/EL	10	0.9	2L4' T8 28w/ELEE HI/RFL	10	0.6	1,988	ALREADY EXISTS		
IN	2231	Anthony Wayne-Mi	Classroom 102	1	3L2' F40 BIAX/EL	2	0.2	2L2' T8 15w/ELEE HI/RFL	2	0.1	1,988	ALREADY EXISTS		
IN	2232	Anthony Wayne-Mi	Mechanical 101 Me	1	2L4' T8 32w/EL	3	0.2	1L4' T8 28w/ELEE HI/NEW	3	0.1	500	NO RETRO		
IN	2233	Anthony Wayne-Mi	Bath Men	1	3L2' F40 BIAX/EL	3	0.3	3L2' F40BIAX/EL28W	3	0.3	2,548	ALREADY EXISTS		
IN	2234	Anthony Wayne-Mi	Bath Men	1	2L2' T8 17w/EL	1	0.0	2L2' T8 15w/ELEE LO/NEW	1	0.0	2,548	ALREADY EXISTS		
IN	2235	Anthony Wayne-Mi	Bath Boys	1	3L4' T8 32w/EL	4	0.4	3L4' T8 28w/ELEE LO	4	0.3	2,548	ALREADY EXISTS		
IN	2236	Anthony Wayne-Mi	Bath Boys	1	2L4' T8 32w/EL	2	0.1	2L4' T8 28w/ELEE LO/NEW	2	0.1	2,548	ALREADY EXISTS		
IN	2237	Anthony Wayne-Mi	Hall Stair 1 To Stair 2	1	1L2' F40 BIAX/EL	4	0.2	1L2' F40BIAX/EL28W	4	0.1	3,640	NO RETRO		
IN	2238	Anthony Wayne-Mi	Hall Stair 1 To Stair 2	1	3L4' T8 32w/EL	9	0.8	3L4' T8 28w/ELEE LO	9	0.6	3,640	NO RETRO		
IN	2239	Anthony Wayne-Mi	Hall Stair 1 To Stair 2	1	4L4' T8 32w/EL	4	0.4	4L4' T8 28w/ELEE LO	4	0.3	3,640	NO RETRO		
IN	2240	Anthony Wayne-Mi	Hall Stair 1 To Stair 2	1	2x18W COMPACT HARDV	12	0.5	NO RETRO		0.5	3,640	NO RETRO		

In or Out	Line	Building Name	Location	Fl	Pre Fixture Description	Pre Qty	Pre kW	Post Fixture Description	Post Qty	Post kW	Annual Hours	*Control Description*	*Control Qty*	Control kWH Saved
IN	2241	Anthony Wayne-Mi	Hall Stair 2 To Boys Locker	1	3L4' T8 32w/EL	5	0.4	2L4' T8 28w/ELEE HI/RFL	5	0.3	3,640	NO RETRO		
IN	2242	Anthony Wayne-Mi	Hall Stair 2 To Boys Locker	1	3L4' T8 32w/EL	2	0.2	2L4' T8 28w/ELEE HI/RFL	2	0.1	3,640	NO RETRO		
IN	2243	Anthony Wayne-Mi	Hall Stair 2 To Boys Locker	1	2L4' T8 28w/ELEE-8'	2	0.1	2L4' T8 28w/ELEE LO-8'	2	0.1	3,640	NO RETRO		
IN	2244	Anthony Wayne-Mi	Hall Stair 2 To Boys Locker	1	1L2' F40 BIAX/EL	2	0.1	1L2' F40BIAX/EL28W	2	0.1	3,640	NO RETRO		
IN	2245	Anthony Wayne-Mi	Bath Boys	1	3L4' T8 32w/EL	2	0.2	3L4' T8 28w/ELEE LO	2	0.1	3,640	OCC SENSOR CEILING	1	138
IN	2246	Anthony Wayne-Mi	Bath Boys	1	3L2' F40 BIAX/EL	1	0.1	3L2' F40BIAX/EL28W	1	0.1	3,640	INCLUDED ABOVE		103
IN	2247	Anthony Wayne-Mi	Locker Boys	1	3L2' F40 BIAX/EL	2	0.2	3L2' F40BIAX/EL28W	2	0.2	3,640	NO RETRO		
IN	2248	Anthony Wayne-Mi	Locker Boys	1	3L4' T8 32w/EL	12	1.1	3L4' T8 28w/ELEE LO	12	0.8	3,640	NO RETRO		
IN	2249	Anthony Wayne-Mi	Locker Toilet	1	3L4' T8 32w/EL	2	0.2	3L4' T8 28w/ELEE LO	2	0.1	2,548	ALREADY EXISTS		
IN	2250	Anthony Wayne-Mi	Office 125 Ao Coach	1	3L4' T8 32w/EL	2	0.2	3L4' T8 28w/ELEE LO (1L&2L BA	2	0.1	2,840	NO RETRO		
IN	2251	Anthony Wayne-Mi	Bath 125 Ao Coach	1	3L2' F40 BIAX/EL	1	0.1	3L2' F40BIAX/EL28W	1	0.1	3,640	NO RETRO		
IN	2252	Anthony Wayne-Mi	Bath 125 Ao Coach	1	2L2' T8 17w/EL	1	0.0	2L2' T8 15w/ELEE LO/NEW	1	0.0	3,640	NO RETRO		
IN	2253	Anthony Wayne-Mi	Bath 125 Ao Coach	1	2x18W COMPACT HARDV	1	0.0	NO RETRO		0.0	3,640	NO RETRO		
IN	2254	Anthony Wayne-Mi	Gym Main	1	400W METAL HALIDE	16	7.3	222 WATT LED/NEW	16	3.6	3,440	OCC. SENSOR ON HI BAY FI	16	3,666
IN	2255	Anthony Wayne-Mi	Storage 123 Sta	1	2L4' T8 32w/EL	2	0.1	1L4' T8 28w/ELEE HI/NEW	2	0.1	350	ALREADY EXISTS		
IN	2256	Anthony Wayne-Mi	Storage 123 St B	1	2L4' T8 32w/EL	2	0.1	1L4' T8 28w/ELEE HI/NEW	2	0.1	350	ALREADY EXISTS		
IN	2257	Anthony Wayne-Mi	Gym 124 Aux	1	250W METAL HALIDE	12	3.5	222 WATT LED/NEW	12	2.7	3,440	OCC. SENSOR ON HI BAY FI	12	2,749
IN	2258	Anthony Wayne-Mi	Storage 124 S2	1	2L4' T8 32w/EL	1	0.1	1L4' T8 28w/ELEE HI/NEW	1	0.0	350	ALREADY EXISTS		
IN	2259	Anthony Wayne-Mi	Storage 124 S1	1	2L4' T8 32w/EL	1	0.1	1L4' T8 28w/ELEE HI/NEW	1	0.0	350	ALREADY EXISTS		
IN	2260	Anthony Wayne-Mi	Gym 126 Aux	1	250W METAL HALIDE	12	3.5	222 WATT LED/NEW	12	2.7	3,440	OCC. SENSOR ON HI BAY FI	12	2,749
IN	2261	Anthony Wayne-Mi	Storage 126 S2	1	2L4' T8 32w/EL	1	0.1	1L4' T8 28w/ELEE HI/NEW	1	0.0	350	ALREADY EXISTS		
IN	2262	Anthony Wayne-Mi	Storage 126 S1	1	2L4' T8 32w/EL	1	0.1	1L4' T8 28w/ELEE HI/NEW	1	0.0	350	ALREADY EXISTS		
IN	2263	Anthony Wayne-Mi	Hall Stair 3 To Girls Locker	1	3L4' T8 32w/EL	5	0.4	2L4' T8 28w/ELEE HI/RFL	5	0.3	3,640	NO RETRO		
IN	2264	Anthony Wayne-Mi	Hall Stair 3 To Girls Locker	1	3L4' T8 32w/EL	2	0.2	2L4' T8 28w/ELEE HI/RFL	2	0.1	3,640	NO RETRO		
IN	2265	Anthony Wayne-Mi	Hall Stair 3 To Girls Locker	1	2L4' T8 28w/ELEE-8'	2	0.1	2L4' T8 28w/ELEE LO-8'	2	0.1	3,640	NO RETRO		
IN	2266	Anthony Wayne-Mi	Hall Stair 3 To Girls Locker	1	1L2' F40 BIAX/EL	2	0.1	1L2' F40BIAX/EL28W	2	0.1	3,640	NO RETRO		
IN	2267	Anthony Wayne-Mi	Bath Girls	1	3L4' T8 32w/EL	2	0.2	3L4' T8 28w/ELEE LO	2	0.1	3,640	NO RETRO		
IN	2268	Anthony Wayne-Mi	Bath Girls	1	3L2' F40 BIAX/EL	1	0.1	3L2' F40BIAX/EL28W	1	0.1	3,640	NO RETRO		
IN	2269	Anthony Wayne-Mi	Locker 127 Girls	1	3L2' F40 BIAX/EL	2	0.2	3L2' F40BIAX/EL28W	2	0.2	3,640	NO RETRO		
IN	2270	Anthony Wayne-Mi	Locker 127 Girls	1	3L4' T8 32w/EL	12	1.1	3L4' T8 28w/ELEE LO	12	0.8	3,640	NO RETRO		
IN	2271	Anthony Wayne-Mi	Locker Toilet	1	3L4' T8 32w/EL	2	0.2	3L4' T8 28w/ELEE LO	2	0.1	3,640	NO RETRO		
IN	2272	Anthony Wayne-Mi	Office 127 Ao Coach	1	3L4' T8 32w/EL	2	0.2	3L4' T8 28w/ELEE LO (1L&2L BA	2	0.1	2,840	NO RETRO		
IN	2273	Anthony Wayne-Mi	Bath 127 Ao Coach	1	3L2' F40 BIAX/EL	1	0.1	3L2' F40BIAX/EL28W	1	0.1	3,640	NO RETRO		
IN	2274	Anthony Wayne-Mi	Bath 127 Ao Coach	1	2L2' T8 17w/EL	1	0.0	2L2' T8 15w/ELEE LO/NEW	1	0.0	3,640	NO RETRO		
IN	2275	Anthony Wayne-Mi	Bath 127 Ao Coach	1	2x18W COMPACT HARDV	1	0.0	NO RETRO		0.0	3,640	NO RETRO		
IN	2276	Anthony Wayne-Mi	Classroom 101	1	3L4' T8 32w/EL	15	1.3	2L4' T8 28w/ELEE HI/RFL	15	1.0	1,988	ALREADY EXISTS		
IN	2277	Anthony Wayne-Mi	Office 101 Sp	1	3L4' T8 32w/EL	4	0.4	3L4' T8 28w/ELEE LO (1L&2L BA	4	0.3	1,988	ALREADY EXISTS		
IN	2278	Anthony Wayne-Mi	Mechanical 101 Me Elevator	1	2L4' T8 32w/EL	1	0.1	1L4' T8 28w/ELEE HI/NEW	1	0.0	500	NO RETRO		
IN	2279	Anthony Wayne-Mi	Classroom 112 Science	1	3L4' T8 32w/EL	15	1.3	2L4' T8 28w/ELEE HI/RFL	15	1.0	1,988	ALREADY EXISTS		
IN	2280	Anthony Wayne-Mi	Storage 100 Sc Paper Storage	1	3L2' F40 BIAX/EL	2	0.2	3L2' F40BIAX/EL28W	2	0.2	350	ALREADY EXISTS		

In or Out	Line	Building Name	Location	Fl	Pre Fixture Description	Pre Qty	Pre kW	Post Fixture Description	Post Qty	Post kW	Annual Hours	*Control Description*	*Control Qty*	Control kWH Saved
IN	2281	Anthony Wayne-Mi	Hall 100 Sc To Stair 3	1	1L2' F40 BIAX/EL	36	1.7	1L2' F40BIAX/EL28W	36	1.2	3,640	NO RETRO		
IN	2282	Anthony Wayne-Mi	Hall 100 Sc To Stair 3	1	2x18W COMPACT HARDV	2	0.1	NO RETRO		0.1	3,640	NO RETRO		
IN	2283	Anthony Wayne-Mi	Hall 100 Sc To Stair 3	1	4L4' T8 32w/EL	1	0.1	4L4' T8 28w/ELEE LO	1	0.1	3,640	NO RETRO		
IN	2284	Anthony Wayne-Mi	Hall 100 Sc To Stair 3	1	1L2' 24W T5HO/EL	35	1.0	NO RETRO		1.0	3,640	NO RETRO		
IN	2285	Anthony Wayne-Mi	Hall 100 Sc To Stair 3	1	3L4' T8 32w/EL	2	0.2	2L4' T8 28w/ELEE HI/RFL	2	0.1	3,640	NO RETRO		
IN	2286	Anthony Wayne-Mi	Hall Entry	1	2x13W COMPACT HARDV	4	0.1	NO RETRO		0.1	3,640	NO RETRO		
IN	2287	Anthony Wayne-Mi	Hall Entry	1	100W METAL HALIDE	4	0.5	NO RETRO		0.5	3,640	NO RETRO		
IN	2288	Anthony Wayne-Mi	Office Open 100 Main	1	6L4' T8 32w/EL-8'	9	1.6	6L4' T8 28w/ELEE LO-8'	9	1.1	2,408	ALREADY EXISTS		
IN	2289	Anthony Wayne-Mi	Office 100 Co	1	3L4' T8 32w/EL	2	0.2	3L4' T8 28w/ELEE LO (1L&2L BA	2	0.1	1,988	ALREADY EXISTS		
IN	2290	Anthony Wayne-Mi	Office 100 Do	1	9L4' T8 32w/EL-12'	1	0.3	9L4' T8 28w/ELEE LO-12'	1	0.2	1,988	ALREADY EXISTS		
IN	2291	Anthony Wayne-Mi	Office 100 Ao	1	9L4' T8 32w/EL-12'	1	0.3	9L4' T8 28w/ELEE LO-12'	1	0.2	1,988	ALREADY EXISTS		
IN	2292	Anthony Wayne-Mi	Bath Staff	1	3L2' F40 BIAX/EL	1	0.1	3L2' F40BIAX/EL28W	1	0.1	2,548	ALREADY EXISTS		
IN	2293	Anthony Wayne-Mi	Conference 100 Bo	1	9L4' T8 32w/EL-12'	1	0.3	9L4' T8 28w/ELEE LO-12'	1	0.2	1,988	ALREADY EXISTS		
IN	2294	Anthony Wayne-Mi	Storage 100 Eo	1	3L4' T8 32w/EL	2	0.2	3L4' T8 28w/ELEE LO	2	0.1	1,708	ALREADY EXISTS		
IN	2295	Anthony Wayne-Mi	Office Open 110	1	9L4' T8 32w/EL-12'	2	0.5	9L4' T8 28w/ELEE LO-12'	2	0.4	2,408	ALREADY EXISTS		
IN	2296	Anthony Wayne-Mi	Office Open 110	1	3L2' F40 BIAX/EL	2	0.2	3L2' F40BIAX/EL28W	2	0.2	2,408	ALREADY EXISTS		
IN	2297	Anthony Wayne-Mi	Office 110 Eo	1	6L4' T8 32w/EL-8'	1	0.2	6L4' T8 28w/ELEE LO-8'	1	0.1	1,988	ALREADY EXISTS		
IN	2298	Anthony Wayne-Mi	Office 110 Do	1	6L4' T8 32w/EL-8'	1	0.2	6L4' T8 28w/ELEE LO-8'	1	0.1	1,988	ALREADY EXISTS		
IN	2299	Anthony Wayne-Mi	Storage 110 Cc	1	3L2' F40 BIAX/EL	1	0.1	3L2' F40BIAX/EL28W	1	0.1	350	ALREADY EXISTS		
IN	2300	Anthony Wayne-Mi	Office 110 Co	1	6L4' T8 32w/EL-8'	1	0.2	6L4' T8 28w/ELEE LO-8'	1	0.1	1,988	ALREADY EXISTS		
IN	2301	Anthony Wayne-Mi	Office 110 Bo	1	6L4' T8 32w/EL-8'	1	0.2	6L4' T8 28w/ELEE LO-8'	1	0.1	1,988	ALREADY EXISTS		
IN	2302	Anthony Wayne-Mi	Office 110 Ao	1	6L4' T8 32w/EL-8'	1	0.2	6L4' T8 28w/ELEE LO-8'	1	0.1	1,988	ALREADY EXISTS		
IN	2303	Anthony Wayne-Mi	Storage 110 Sc	1	3L4' T8 32w/EL	1	0.1	3L4' T8 28w/ELEE LO (1L&2L BA	1	0.1	350	ALREADY EXISTS		
IN	2304	Anthony Wayne-Mi	Office 111 Nurse	1	3L2' F40 BIAX/EL	1	0.1	3L2' F40BIAX/EL28W	1	0.1	1,988	ALREADY EXISTS		
IN	2305	Anthony Wayne-Mi	Office 111 Nurse	1	6L4' T8 32w/EL-8'	2	0.4	6L4' T8 28w/ELEE LO-8'	2	0.3	1,988	ALREADY EXISTS		
IN	2306	Anthony Wayne-Mi	Office 111 Nurse	1	3L4' T8 32w/EL	1	0.1	3L4' T8 28w/ELEE LO	1	0.1	2,840	TIMER WALLSWITCH 1GANG	1	54
IN	2307	Anthony Wayne-Mi	Office 111 Nurse	1	3L4' T8 32w/EL	1	0.1	3L4' T8 28w/ELEE LO	1	0.1	2,840	TIMER WALLSWITCH 1GANG	1	54
IN	2308	Anthony Wayne-Mi	Office 111 Nurse	1	3L4' T8 32w/EL	1	0.1	3L4' T8 28w/ELEE LO	1	0.1	2,840	TIMER WALLSWITCH 1GANG	1	54
IN	2309	Anthony Wayne-Mi	Office 111 Nurse	1	3L4' T8 32w/EL	1	0.1	3L4' T8 28w/ELEE LO	1	0.1	2,840	TIMER WALLSWITCH 1GANG	1	54
IN	2310	Anthony Wayne-Mi	Bath 111 Nurse	1	3L4' T8 32w/EL	1	0.1	3L4' T8 28w/ELEE LO	1	0.1	2,548	ALREADY EXISTS		
IN	2311	Anthony Wayne-Mi	Office 110 Ao Exam	1	3L4' T8 32w/EL	2	0.2	3L4' T8 28w/ELEE LO (1L&2L BA	2	0.1	1,988	ALREADY EXISTS		
IN	2312	Anthony Wayne-Mi	Storage 111 Sc Medical	1	3L4' T8 32w/EL	1	0.1	3L4' T8 28w/ELEE LO	1	0.1	350	ALREADY EXISTS		
IN	2313	Anthony Wayne-Mi	Bath Girls	1	3L4' T8 32w/EL	4	0.4	3L4' T8 28w/ELEE LO	4	0.3	2,548	ALREADY EXISTS		
IN	2314	Anthony Wayne-Mi	Bath Girls	1	2L4' T8 32w/EL	2	0.1	2L4' T8 28w/ELEE LO/NEW	2	0.1	2,548	ALREADY EXISTS		
IN	2315	Anthony Wayne-Mi	Bath Women	1	3L2' F40 BIAX/EL	3	0.3	3L2' F40BIAX/EL28W	3	0.3	2,548	ALREADY EXISTS		
IN	2316	Anthony Wayne-Mi	Bath Women	1	2L4' T8 32w/EL	1	0.1	2L4' T8 28w/ELEE LO/NEW	1	0.0	2,548	ALREADY EXISTS		
IN	2317	Anthony Wayne-Mi	Closet 114 Jc / 114 Dr	1	2L4' T8 32w/EL	4	0.2	1L4' T8 28w/ELEE HI/NEW	4	0.1	500	NO RETRO		
IN	2318	Anthony Wayne-Mi	Hall 114 Jc To 122	1	3L4' T8 32w/EL	9	0.8	3L4' T8 28w/ELEE LO	9	0.6	3,640	NO RETRO		
IN	2319	Anthony Wayne-Mi	Hall 114 Jc To 122	1	2x13W COMPACT HARDV	8	0.2	NO RETRO		0.2	3,640	NO RETRO		
IN	2320	Anthony Wayne-Mi	Hall 114 Jc To 122	1	4L4' T8 32w/EL	3	0.3	4L4' T8 28w/ELEE LO	3	0.2	3,640	NO RETRO		

In or Out	Line	Building Name	Location	Fl	Pre Fixture Description	Pre Qty	Pre kW	Post Fixture Description	Post Qty	Post kW	Annual Hours	*Control Description*	*Control Qty*	Control kWH Saved
IN	2321	Anthony Wayne-Mi	Office Open 113 Cst	1	3L4' T8 32w/EL	4	0.4	3L4' T8 28w/ELEE LO (1L&2L BA	4	0.3	2,408	ALREADY EXISTS		
IN	2322	Anthony Wayne-Mi	Office Open 113 Cst	1	3L2' F40 BIAX/EL	2	0.2	3L2' F40BIAX/EL28W	2	0.2	2,408	ALREADY EXISTS		
IN	2323	Anthony Wayne-Mi	Office 113 Ao	1	3L4' T8 32w/EL	2	0.2	3L4' T8 28w/ELEE LO (1L&2L BA	2	0.1	1,988	ALREADY EXISTS		
IN	2324	Anthony Wayne-Mi	Office 113 Co	1	3L4' T8 32w/EL	2	0.2	3L4' T8 28w/ELEE LO (1L&2L BA	2	0.1	1,988	ALREADY EXISTS		
IN	2325	Anthony Wayne-Mi	Closet 113 Sc	1	3L4' T8 32w/EL	1	0.1	3L4' T8 28w/ELEE LO	1	0.1	350	ALREADY EXISTS		
IN	2326	Anthony Wayne-Mi	Office 113 Bo	1	3L4' T8 32w/EL	2	0.2	3L4' T8 28w/ELEE LO (1L&2L BA	2	0.1	1,988	ALREADY EXISTS		
IN	2327	Anthony Wayne-Mi	Office 113 Do	1	3L4' T8 32w/EL	2	0.2	3L4' T8 28w/ELEE LO (1L&2L BA	2	0.1	1,988	ALREADY EXISTS		
IN	2328	Anthony Wayne-Mi	Classroom 114	1	3L4' T8 32w/EL	11	1.0	2L4' T8 28w/ELEE HI/RFL	11	0.7	1,988	ALREADY EXISTS		
IN	2329	Anthony Wayne-Mi	Classroom 114	1	3L2' F40 BIAX/EL	1	0.1	2L2' T8 15w/ELEE HI/RFL	1	0.0	1,988	ALREADY EXISTS		
IN	2330	Anthony Wayne-Mi	Classroom 116	1	3L4' T8 32w/EL	11	1.0	2L4' T8 28w/ELEE HI/RFL	11	0.7	1,988	ALREADY EXISTS		
IN	2331	Anthony Wayne-Mi	Classroom 116	1	3L2' F40 BIAX/EL	1	0.1	2L2' T8 15w/ELEE HI/RFL	1	0.0	1,988	ALREADY EXISTS		
IN	2332	Anthony Wayne-Mi	Classroom 115	1	3L4' T8 32w/EL	11	1.0	2L4' T8 28w/ELEE HI/RFL	11	0.7	1,988	ALREADY EXISTS		
IN	2333	Anthony Wayne-Mi	Classroom 115	1	3L2' F40 BIAX/EL	1	0.1	2L2' T8 15w/ELEE HI/RFL	1	0.0	1,988	ALREADY EXISTS		
IN	2334	Anthony Wayne-Mi	Classroom 117	1	3L4' T8 32w/EL	11	1.0	2L4' T8 28w/ELEE HI/RFL	11	0.7	1,988	ALREADY EXISTS		
IN	2335	Anthony Wayne-Mi	Classroom 117	1	3L2' F40 BIAX/EL	1	0.1	2L2' T8 15w/ELEE HI/RFL	1	0.0	1,988	ALREADY EXISTS		
IN	2336	Anthony Wayne-Mi	Classroom 118	1	3L4' T8 32w/EL	7	0.6	2L4' T8 28w/ELEE HI/RFL	7	0.4	1,988	ALREADY EXISTS		
IN	2337	Anthony Wayne-Mi	Classroom 118	1	3L2' F40 BIAX/EL	1	0.1	2L2' T8 15w/ELEE HI/RFL	1	0.0	1,988	ALREADY EXISTS		
IN	2338	Anthony Wayne-Mi	Classroom 120	1	3L4' T8 32w/EL	7	0.6	2L4' T8 28w/ELEE HI/RFL	7	0.4	1,988	ALREADY EXISTS		
IN	2339	Anthony Wayne-Mi	Classroom 120	1	3L2' F40 BIAX/EL	1	0.1	2L2' T8 15w/ELEE HI/RFL	1	0.0	1,988	ALREADY EXISTS		
IN	2340	Anthony Wayne-Mi	Classroom 121	1	3L4' T8 32w/EL	11	1.0	3L4' T8 28w/ELEE LO (1L&2L BA	11	0.7	1,988	ALREADY EXISTS		
IN	2341	Anthony Wayne-Mi	Classroom 121	1	3L2' T8 17w/EL	1	0.0	3L2' T8 15w/ELEE LO	1	0.0	1,988	ALREADY EXISTS		
IN	2342	Anthony Wayne-Mi	Classroom 119	1	3L4' T8 32w/EL	18	1.6	3L4' T8 28w/ELEE LO (1L&2L BA	18	1.2	1,988	ALREADY EXISTS		
IN	2343	Anthony Wayne-Mi	Classroom 119	1	3L2' T8 17w/EL	2	0.1	3L2' T8 15w/ELEE LO	2	0.1	1,988	ALREADY EXISTS		
IN	2344	Anthony Wayne-Mi	Shop 122 Tech Lab/Wood	1	2L4' T5 HO/EL	15	1.8	NO RETRO		1.8	2,440	NO RETRO		
IN	2345	Anthony Wayne-Mi	Lounge 132 O2	1	9L4' T8 32w/EL-12'	2	0.5	9L4' T8 28w/ELEE LO-12'	2	0.4	1,764	ALREADY EXISTS		
IN	2346	Anthony Wayne-Mi	Office 132-01	1	9L4' T8 32w/EL-12'	1	0.3	9L4' T8 28w/ELEE LO-12'	1	0.2	1,988	ALREADY EXISTS		
IN	2347	Anthony Wayne-Mi	Storage A/V	1	3L4' T8 32w/EL	4	0.4	3L4' T8 28w/ELEE LO	4	0.3	1,708	ALREADY EXISTS		
IN	2348	Anthony Wayne-Mi	Library	1	6L4' T8 32w/EL-8'	45	8.1	6L4' T8 28w/ELEE LO-8'	45	5.7	2,840	NO RETRO		
IN	2349	Anthony Wayne-Mi	Storage 132 Dr	1	3L4' T8 32w/EL	1	0.1	3L4' T8 28w/ELEE LO	1	0.1	1,708	ALREADY EXISTS		
IN	2350	Anthony Wayne-Mi	Bath Boys	1	3L4' T8 32w/EL	1	0.1	3L4' T8 28w/ELEE LO	1	0.1	2,548	ALREADY EXISTS		
IN	2351	Anthony Wayne-Mi	Bath Girls	1	3L4' T8 32w/EL	1	0.1	3L4' T8 28w/ELEE LO	1	0.1	2,548	ALREADY EXISTS		
IN	2352	Anthony Wayne-Mi	Hall Lib To 117	1	3L4' T8 32w/EL	5	0.4	3L4' T8 28w/ELEE LO (1L&2L BA	5	0.3	3,640	DAYLIGHT HARVESTING SYS	5	582
IN	2353	Anthony Wayne-Mi	Hall Lib To 117	1	2L4' T5 HO/EL-8'	2	0.2	NO RETRO		0.2	3,640	NO RETRO		
IN	2354	Anthony Wayne-Mi	Hall Lib To 117	1	3L4' T8 32w/EL	6	0.5	3L4' T8 28w/ELEE LO (1L&2L BA	6	0.4	3,640	NO RETRO		
IN	2355	Anthony Wayne-Mi	Bldg Mt Fixture 1	ext	2x18W COMPACT HARDV	41	1.6	NO RETRO		1.6	4,380	NO RETRO		
IN	2356	Anthony Wayne-Mi	Bldg Mt Fixture 2	ext	100W METAL HALIDE	6	0.7	NO RETRO		0.7	4,380	NO RETRO		
IN	2357	Anthony Wayne-Mi	Bldg Mt Fixture 3	ext	150W METAL HALIDE	8	1.5	NO RETRO		1.5	4,380	NO RETRO		
IN	2358	Anthony Wayne-Mi	Bldg Mt Fixture 4	ext	2x18W COMPACT HARDV	2	0.1	NO RETRO		0.1	4,380	NO RETRO		
IN	2359	Anthony Wayne-Mi	Bldg Mt Fixture 5	ext	50W METAL HALIDE	5	0.3	22 WATT LED/KIT	5	0.1	4,380	NO RETRO		
IN	2360	Anthony Wayne-Mi	Parking Lot Around School (44)	ext	250W HI PRESSURE SOD	44	13.0	133 WATT LED/NEW	44	5.9	4,380	NO RETRO		

In or Out	Line	Building Name	Location	Fl	Pre Fixture Description	Pre Qty	Pre kW	Post Fixture Description	Post Qty	Post kW	Annual Hours	*Control Description*	*Control Qty*	Control kWH Saved
IN	2361	Wayne Hills-High S	Classroom 235	2	4L4' T8 32w/EL-8'	4	0.4	2L4' T8 28w/ELEE HI/NEW-8'	4	0.3	1,988	ALREADY EXISTS		
IN	2362	Wayne Hills-High S	Classroom 235	2	2L4' T8 28w/ELEE	1	0.0	1L4' T8 28w/ELEE HI/NEW	1	0.0	1,988	ALREADY EXISTS		
IN	2363	Wayne Hills-High S	Classroom 235	2	4L4' T8 32w/EL-8'	8	0.9	2L4' T8 28w/ELEE HI/NEW-8'	8	0.5	1,988	ALREADY EXISTS		
IN	2364	Wayne Hills-High S	Classroom 235	2	2L4' T8 28w/ELEE	2	0.1	1L4' T8 28w/ELEE HI/NEW	2	0.1	1,988	ALREADY EXISTS		
IN	2365	Wayne Hills-High S	Classroom 236	2	4L4' T8 32w/EL-8'	3	0.3	2L4' T8 28w/ELEE HI/NEW-8'	3	0.2	1,988	ALREADY EXISTS		
IN	2366	Wayne Hills-High S	Classroom 236	2	2L4' T8 28w/ELEE	1	0.0	1L4' T8 28w/ELEE HI/NEW	1	0.0	1,988	ALREADY EXISTS		
IN	2367	Wayne Hills-High S	Classroom 236	2	4L4' T8 32w/EL-8'	6	0.7	2L4' T8 28w/ELEE HI/NEW-8'	6	0.4	1,988	ALREADY EXISTS		
IN	2368	Wayne Hills-High S	Classroom 236	2	2L4' T8 28w/ELEE	2	0.1	1L4' T8 28w/ELEE HI/NEW	2	0.1	1,988	ALREADY EXISTS		
IN	2369	Wayne Hills-High S	Classroom 237	2	4L4' T8 32w/EL-8'	3	0.3	2L4' T8 28w/ELEE HI/NEW-8'	3	0.2	1,988	ALREADY EXISTS		
IN	2370	Wayne Hills-High S	Classroom 237	2	2L4' T8 28w/ELEE	1	0.0	1L4' T8 28w/ELEE HI/NEW	1	0.0	1,988	ALREADY EXISTS		
IN	2371	Wayne Hills-High S	Classroom 237	2	4L4' T8 32w/EL-8'	6	0.7	2L4' T8 28w/ELEE HI/NEW-8'	6	0.4	1,988	ALREADY EXISTS		
IN	2372	Wayne Hills-High S	Classroom 237	2	2L4' T8 28w/ELEE	2	0.1	1L4' T8 28w/ELEE HI/NEW	2	0.1	1,988	ALREADY EXISTS		
IN	2373	Wayne Hills-High S	Classroom 238	2	3L4' T8 32w/EL	4	0.4	2L4' T8 28w/ELEE/RFL	4	0.2	1,988	ALREADY EXISTS		
IN	2374	Wayne Hills-High S	Classroom 238	2	3L4' T8 32w/EL	9	0.8	2L4' T8 28w/ELEE/RFL	9	0.4	1,988	ALREADY EXISTS		
IN	2375	Wayne Hills-High S	Office 238	2	4L4' T8 32w/EL-8'	1	0.1	2L4' T8 28w/ELEE HI/NEW-8'	1	0.1	2,840	OCC SENSOR CEILING	1	55
IN	2376	Wayne Hills-High S	Office 238	2	2L4' T8 28w/ELEE	1	0.0	1L4' T8 28w/ELEE HI/NEW	1	0.0	2,840	INCLUDED ABOVE		28
IN	2377	Wayne Hills-High S	Classroom 239	2	4L4' T8 32w/EL-8'	2	0.2	2L4' T8 28w/ELEE HI/NEW-8'	2	0.1	1,988	ALREADY EXISTS		
IN	2378	Wayne Hills-High S	Classroom 239	2	2L4' T8 28w/ELEE	1	0.0	1L4' T8 28w/ELEE HI/NEW	1	0.0	1,988	ALREADY EXISTS		
IN	2379	Wayne Hills-High S	Classroom 239	2	4L4' T8 32w/EL-8'	3	0.3	2L4' T8 28w/ELEE HI/NEW-8'	3	0.2	1,988	ALREADY EXISTS		
IN	2380	Wayne Hills-High S	Classroom 239	2	2L4' T8 28w/ELEE	2	0.1	1L4' T8 28w/ELEE HI/NEW	2	0.1	1,988	ALREADY EXISTS		
IN	2381	Wayne Hills-High S	Classroom 240	2	4L4' T8 32w/EL-8'	2	0.2	2L4' T8 28w/ELEE HI/NEW-8'	2	0.1	1,988	ALREADY EXISTS		
IN	2382	Wayne Hills-High S	Classroom 240	2	2L4' T8 28w/ELEE	1	0.0	1L4' T8 28w/ELEE HI/NEW	1	0.0	1,988	ALREADY EXISTS		
IN	2383	Wayne Hills-High S	Classroom 240	2	4L4' T8 32w/EL-8'	3	0.3	2L4' T8 28w/ELEE HI/NEW-8'	3	0.2	1,988	ALREADY EXISTS		
IN	2384	Wayne Hills-High S	Classroom 240	2	2L4' T8 28w/ELEE	2	0.1	1L4' T8 28w/ELEE HI/NEW	2	0.1	1,988	ALREADY EXISTS		
IN	2385	Wayne Hills-High S	Office 240	2	4L4' T8 32w/EL-8'	1	0.1	2L4' T8 28w/ELEE HI/NEW-8'	1	0.1	2,840	OCC SENSOR CEILING	1	55
IN	2386	Wayne Hills-High S	Office 240	2	2L4' T8 28w/ELEE	1	0.0	1L4' T8 28w/ELEE HI/NEW	1	0.0	2,840	INCLUDED ABOVE		28
IN	2387	Wayne Hills-High S	Classroom 241	2	6L4' T8 32w/EL-8'	4	0.7	6L4' T8 28w/ELEE LO-8'	4	0.5	1,988	ALREADY EXISTS		
IN	2388	Wayne Hills-High S	Classroom 241	2	3L4' T8 32w/EL	1	0.1	3L4' T8 28w/ELEE LO	1	0.1	1,988	ALREADY EXISTS		
IN	2389	Wayne Hills-High S	Classroom 241	2	6L4' T8 32w/EL-8'	7	1.3	6L4' T8 28w/ELEE LO-8'	7	0.9	2,840	NO RETRO		
IN	2390	Wayne Hills-High S	Classroom 241	2	3L4' T8 32w/EL	1	0.1	3L4' T8 28w/ELEE LO	1	0.1	2,840	NO RETRO		
IN	2391	Wayne Hills-High S	Hall 235 - 241	2	3L2' T8 17w/EL	21	1.0	3L2' T8 15w/ELEE LO	21	0.8	3,640	NO RETRO		
IN	2392	Wayne Hills-High S	Hall 235 To 294	2	2L4' T8 32w/EL	9	0.5	2L4' T8 28w/ELEE LO	9	0.4	3,640	NO RETRO		
IN	2393	Wayne Hills-High S	Stair By 294	s	150W METAL HALIDE	4	0.8	NO RETRO		0.8	3,640	PHOTO SENSOR FOR ON/OF	1	830
IN	2394	Wayne Hills-High S	Stair By 294	s	2L4' T8 28w/ELEE	2	0.1	2L4' T8 28w/ELEE LO	2	0.1	3,640	NO RETRO		
IN	2395	Wayne Hills-High S	Classroom 294	2	3L4' T8 32w/EL	9	0.8	2L4' T8 28w/ELEE/RFL	9	0.4	1,988	ALREADY EXISTS		
IN	2396	Wayne Hills-High S	Classroom 295	2	4L4' T8 32w/EL	8	0.9	2L4' T8 28w/ELEE/RFL	8	0.4	1,988	ALREADY EXISTS		
IN	2397	Wayne Hills-High S	Classroom 295	2	4L4' T8 32w/EL	1	0.1	2L4' T8 28w/ELEE/RFL	1	0.0	2,840	NO RETRO		
IN	2398	Wayne Hills-High S	Classroom 293	2	4L4' T8 32w/EL	9	1.0	2L4' T8 28w/ELEE/RFL	9	0.4	1,988	ALREADY EXISTS		
IN	2399	Wayne Hills-High S	Classroom 292	2	4L4' T8 32w/EL	10	1.1	2L4' T8 28w/ELEE/RFL	10	0.5	1,988	ALREADY EXISTS		
IN	2400	Wayne Hills-High S	Classroom 292	2	4L4' T8 32w/EL	5	0.6	2L4' T8 28w/ELEE/RFL	5	0.2	1,988	ALREADY EXISTS		

In or Out	Line	Building Name	Location	Fl	Pre Fixture Description	Pre Qty	Pre kW	Post Fixture Description	Post Qty	Post kW	Annual Hours	*Control Description*	*Control Qty*	Control kWH Saved
IN	2401	Wayne Hills-High S	Classroom 291	2	4L4' T8 32w/EL	9	1.0	2L4' T8 28w/ELEE/RFL	9	0.4	1,988	ALREADY EXISTS		
IN	2402	Wayne Hills-High S	Storage 289 Sc	2	2L4' T8 32w/EL	3	0.2	1L4' T8 28w/ELEE HI/NEW	3	0.1	350	ALREADY EXISTS		
IN	2403	Wayne Hills-High S	Bath 289Gt	2	2L2' F40 BIAX/EL	1	0.1	2L2' F40BIAX/EL28W	1	0.1	3,640	OCC SENSOR CEIL DT 1GAN	1	69
IN	2404	Wayne Hills-High S	Bath 289Gt	2	2L4' T8 32w/EL	3	0.2	2L4' T8 28w/ELEE LO	3	0.1	3,640	INCLUDED ABOVE		138
IN	2405	Wayne Hills-High S	Closet 289 Cc	2	2L4' T8 32w/EL	1	0.1	1L4' T8 28w/ELEE HI/NEW	1	0.0	500	NO RETRO		
IN	2406	Wayne Hills-High S	Bath 289Bt	2	2L2' F40 BIAX/EL	1	0.1	2L2' F40BIAX/EL28W	1	0.1	3,640	OCC SENSOR CEIL DT 1GAN	1	69
IN	2407	Wayne Hills-High S	Bath 289Bt	2	2L4' T8 32w/EL	3	0.2	2L4' T8 28w/ELEE LO	3	0.1	3,640	INCLUDED ABOVE		138
IN	2408	Wayne Hills-High S	Classroom 290	2	4L4' T8 32w/EL	4	0.4	2L4' T8 28w/ELEE/RFL	4	0.2	1,988	ALREADY EXISTS		
IN	2409	Wayne Hills-High S	Classroom 290	2	4L4' T8 32w/EL	1	0.1	2L4' T8 28w/ELEE/RFL	1	0.0	1,988	ALREADY EXISTS		
IN	2410	Wayne Hills-High S	Classroom 290	2	4L4' T8 32w/EL	10	1.1	2L4' T8 28w/ELEE/RFL	10	0.5	1,988	ALREADY EXISTS		
IN	2411	Wayne Hills-High S	Storage 290	2	3L4' T8 32w/EL	1	0.1	2L4' T8 28w/ELEE HI/RFL	1	0.1	350	ALREADY EXISTS		
IN	2412	Wayne Hills-High S	Office 290	2	4L4' T8 32w/EL	2	0.2	4L4' T8 28w/ELEE LO (2Lx2 BAL	2	0.2	1,988	ALREADY EXISTS		
IN	2413	Wayne Hills-High S	Office 290	2	2L4' T8 U/EL	1	0.1	2L2' T8 15w/ELEE HI/RFL	1	0.0	1,988	ALREADY EXISTS		
IN	2414	Wayne Hills-High S	Classroom 287	2	3L4' T8 32w/EL	11	1.0	2L4' T8 28w/ELEE/RFL	11	0.5	1,988	ALREADY EXISTS		
IN	2415	Wayne Hills-High S	Classroom 287	2	3L4' T8 32w/EL	1	0.1	2L4' T8 28w/ELEE/RFL	1	0.0	1,988	ALREADY EXISTS		
IN	2416	Wayne Hills-High S	Classroom 286	2	4L4' T8 32w/EL	6	0.7	2L4' T8 28w/ELEE/RFL	6	0.3	1,988	ALREADY EXISTS		
IN	2417	Wayne Hills-High S	Classroom 286	2	4L4' T8 32w/EL	12	1.3	2L4' T8 28w/ELEE/RFL	12	0.6	1,988	ALREADY EXISTS		
IN	2418	Wayne Hills-High S	Classroom 285	2	3L4' T8 32w/EL	12	1.1	2L4' T8 28w/ELEE/RFL	12	0.6	1,988	ALREADY EXISTS		
IN	2419	Wayne Hills-High S	Stair By 285	s	150W METAL HALIDE	4	0.8	NO RETRO		0.8	3,640	PHOTO SENSOR FOR ON/OF	1	830
IN	2420	Wayne Hills-High S	Stair By 285	s	2L4' T8 28w/ELEE	2	0.1	2L4' T8 28w/ELEE LO	2	0.1	3,640	NO RETRO		
IN	2421	Wayne Hills-High S	Hall 295 To 256	2	2L4' T8 32w/EL	24	1.4	2L4' T8 28w/ELEE LO	24	1.0	2,548	ALREADY EXISTS		
IN	2422	Wayne Hills-High S	Hall 295 To 256	2	4L4' T8 32w/EL	4	0.4	4L4' T8 28w/ELEE LO	4	0.3	3,640	NO RETRO		
IN	2423	Wayne Hills-High S	Hall Foot Bridge	2	3L2' T8 17w/EL	3	0.1	3L2' T8 15w/ELEE LO	3	0.1	3,640	DAYLIGHT HARVESTING SYS	3	213
IN	2424	Wayne Hills-High S	Hall Foot Bridge	2	13W COMPACT HARDWIR	2	0.0	NO RETRO		0.0	3,640	NO RETRO		
IN	2425	Wayne Hills-High S	Office 284 Bo	2	3L4' T8 32w/EL	4	0.4	3L4' T8 28w/ELEE LO	4	0.3	2,840	OCC SENSOR CEILING	1	215
IN	2426	Wayne Hills-High S	Office 284 Ao	2	3L4' T8 32w/EL	4	0.4	3L4' T8 28w/ELEE LO	4	0.3	2,840	OCC SENSOR CEILING	1	215
IN	2427	Wayne Hills-High S	Hall Stair West 4 To Stair East 5	2	3L2' T8 17w/EL	28	1.3	3L2' T8 15w/ELEE LO	28	1.1	3,640	NO RETRO		
IN	2428	Wayne Hills-High S	Hall Display Case	2	4L4' T12 EE/EEMAG-8'	2	0.3	2L4' T8 28w/ELEE HI/NEW-8'	2	0.1	3,640	TIMER WALLSWITCH 1GANG	1	140
IN	2429	Wayne Hills-High S	Hall Display Case	2	2L4' T12 EE/EEMAG	1	0.1	1L4' T8 28w/ELEE HI/NEW	1	0.0	3,640	INCLUDED ABOVE		36
IN	2430	Wayne Hills-High S	Classroom 283	2	3L4' T8 32w/EL	19	1.7	2L4' T8 28w/ELEE/RFL	19	0.9	1,988	ALREADY EXISTS		
IN	2431	Wayne Hills-High S	Closet Pans	2	4L4' T8 32w/EL	1	0.1	2L4' T8 28w/ELEE HI/RFL	1	0.1	500	TIMER WALLSWITCH 1GANG	1	10
IN	2432	Wayne Hills-High S	Classroom 282	2	3L4' T8 32w/EL	31	2.7	2L4' T8 28w/ELEE/RFL	31	1.5	1,988	ALREADY EXISTS		
IN	2433	Wayne Hills-High S	Classroom 282	2	3L4' T8 32w/EL	1	0.1	2L4' T8 28w/ELEE/RFL	1	0.0	1,988	ALREADY EXISTS		
IN	2434	Wayne Hills-High S	Stair East 5	s	3L2' T8 17w/EL	3	0.1	3L2' T8 15w/ELEE LO	3	0.1	3,640	NO RETRO		
IN	2435	Wayne Hills-High S	Stair East 5	s	2L4' T8 28w/ELEE	2	0.1	2L4' T8 28w/ELEE LO/NEW	2	0.1	3,640	NO RETRO		
IN	2436	Wayne Hills-High S	Office 280	2	3L4' T8 32w/EL	4	0.4	3L4' T8 28w/ELEE LO	4	0.3	2,840	OCC SENSOR CEILING	1	215
IN	2437	Wayne Hills-High S	Mechanical 279	2	3L4' T8 32w/EL	1	0.1	3L4' T8 28w/ELEE LO	1	0.1	500	TIMER WALLSWITCH 1GANG	1	9
IN	2438	Wayne Hills-High S	Hall 283 To 274	2	3L2' T8 17w/EL	7	0.3	3L2' T8 15w/ELEE LO	7	0.3	2,548	ALREADY EXISTS		
IN	2439	Wayne Hills-High S	Office 278	2	3L4' T8 32w/EL	4	0.4	3L4' T8 28w/ELEE LO	4	0.3	2,840	OCC SENSOR CEILING	1	215
IN	2440	Wayne Hills-High S	Mechanical 240B	2	23W COMPACT HARDWIR	6	0.1	NO RETRO		0.1	500	TIMER WALLSWITCH 1GANG	1	22

In or Out	Line	Building Name	Location	Fl	Pre Fixture Description	Pre Qty	Pre kW	Post Fixture Description	Post Qty	Post kW	Annual Hours	*Control Description*	*Control Qty*	Control kWH Saved
IN	2441	Wayne Hills-High S	Stair 240B	s	2L4' T8 U/EL	3	0.2	2L2' T8 15w/ELEE HI/RFL	3	0.1	3,640	NO RETRO		
IN	2442	Wayne Hills-High S	Stair 240B	s	2L4' T8 28w/ELEE	2	0.1	2L4' T8 28w/ELEE LO/NEW	2	0.1	3,640	NO RETRO		
IN	2443	Wayne Hills-High S	Classroom 277	2	2L4' T8 32w/EL	4	0.2	2L4' T8 28w/ELEE/RFL	4	0.2	1,988	ALREADY EXISTS		
IN	2444	Wayne Hills-High S	Classroom 277	2	3L4' T8 32w/EL	12	1.1	2L4' T8 28w/ELEE/RFL	12	0.6	1,988	ALREADY EXISTS		
IN	2445	Wayne Hills-High S	Classroom 276	2	2L4' T8 32w/EL	4	0.2	2L4' T8 28w/ELEE/RFL	4	0.2	1,988	ALREADY EXISTS		
IN	2446	Wayne Hills-High S	Classroom 276	2	3L4' T8 32w/EL	12	1.1	2L4' T8 28w/ELEE/RFL	12	0.6	1,988	ALREADY EXISTS		
IN	2447	Wayne Hills-High S	Hall 277 To 268	2	3L2' T8 17w/EL	22	1.0	3L2' T8 15w/ELEE LO	22	0.9	2,548	ALREADY EXISTS		
IN	2448	Wayne Hills-High S	Classroom 275	2	2L4' T8 32w/EL	4	0.2	2L4' T8 28w/ELEE/RFL	4	0.2	1,988	ALREADY EXISTS		
IN	2449	Wayne Hills-High S	Classroom 275	2	3L4' T8 32w/EL	12	1.1	2L4' T8 28w/ELEE/RFL	12	0.6	1,988	ALREADY EXISTS		
IN	2450	Wayne Hills-High S	Classroom 274	2	2L4' T8 32w/EL	4	0.2	2L4' T8 28w/ELEE/RFL	4	0.2	1,988	ALREADY EXISTS		
IN	2451	Wayne Hills-High S	Classroom 274	2	3L4' T8 32w/EL	12	1.1	2L4' T8 28w/ELEE/RFL	12	0.6	1,988	ALREADY EXISTS		
IN	2452	Wayne Hills-High S	Classroom 273	2	2L4' T8 32w/EL	4	0.2	2L4' T8 28w/ELEE/RFL	4	0.2	1,988	ALREADY EXISTS		
IN	2453	Wayne Hills-High S	Classroom 273	2	3L4' T8 32w/EL	12	1.1	2L4' T8 28w/ELEE/RFL	12	0.6	1,988	ALREADY EXISTS		
IN	2454	Wayne Hills-High S	Classroom 271	2	2L4' T8 32w/EL	4	0.2	2L4' T8 28w/ELEE/RFL	4	0.2	1,988	ALREADY EXISTS		
IN	2455	Wayne Hills-High S	Classroom 271	2	3L4' T8 32w/EL	12	1.1	2L4' T8 28w/ELEE/RFL	12	0.6	1,988	ALREADY EXISTS		
IN	2456	Wayne Hills-High S	Classroom 269	2	2L4' T8 32w/EL	4	0.2	2L4' T8 28w/ELEE/RFL	4	0.2	1,988	ALREADY EXISTS		
IN	2457	Wayne Hills-High S	Classroom 269	2	3L4' T8 32w/EL	12	1.1	2L4' T8 28w/ELEE/RFL	12	0.6	1,988	ALREADY EXISTS		
IN	2458	Wayne Hills-High S	Classroom 272	2	4L4' T8 32w/EL	3	0.3	2L4' T8 28w/ELEE/RFL	3	0.1	1,988	ALREADY EXISTS		
IN	2459	Wayne Hills-High S	Classroom 272	2	3L4' T8 32w/EL	18	1.6	2L4' T8 28w/ELEE/RFL	18	0.9	1,988	ALREADY EXISTS		
IN	2460	Wayne Hills-High S	Classroom 272	2	13W COMPACT HARDWIF	2	0.0	NO RETRO		0.0	1,988	ALREADY EXISTS		
IN	2461	Wayne Hills-High S	Office Prep	2	3L4' T8 32w/EL	4	0.4	3L4' T8 28w/ELEE LO	4	0.3	2,840	OCC SENSOR WALLSWITCH	2	215
IN	2462	Wayne Hills-High S	Office Prep	2	13W COMPACT HARDWIF	1	0.0	NO RETRO		0.0	2,840	INCLUDED ABOVE		13
IN	2463	Wayne Hills-High S	Classroom 272	2	3L4' T8 32w/EL	21	1.8	2L4' T8 28w/ELEE/RFL	21	1.0	1,988	ALREADY EXISTS		
IN	2464	Wayne Hills-High S	Classroom 270	2	3L4' T8 32w/EL	11	1.0	2L4' T8 28w/ELEE/RFL	11	0.5	1,988	ALREADY EXISTS		
IN	2465	Wayne Hills-High S	Classroom 267	2	3L4' T8 32w/EL	20	1.8	2L4' T8 28w/ELEE/RFL	20	1.0	1,988	ALREADY EXISTS		
IN	2466	Wayne Hills-High S	Stair North 1	s	2L4' T8 U/EL	4	0.2	2L2' T8 15w/ELEE HI/RFL	4	0.1	3,640	NO RETRO		
IN	2467	Wayne Hills-High S	Stair North 1	s	2L4' T8 28w/ELEE	2	0.1	2L4' T8 28w/ELEE LO/NEW	2	0.1	3,640	NO RETRO		
IN	2468	Wayne Hills-High S	Classroom 268	2	3L4' T8 32w/EL	23	2.0	2L4' T8 28w/ELEE/RFL	23	1.1	1,988	ALREADY EXISTS		
IN	2469	Wayne Hills-High S	Classroom 268	2	3L4' T8 32w/EL	1	0.1	2L4' T8 28w/ELEE/RFL	1	0.0	1,988	ALREADY EXISTS		
IN	2470	Wayne Hills-High S	Classroom 268	2	3L4' T8 32w/EL	11	1.0	2L4' T8 28w/ELEE/RFL	11	0.5	1,988	ALREADY EXISTS		
IN	2471	Wayne Hills-High S	Classroom 266	2	2L4' T8 32w/EL	3	0.2	2L4' T8 28w/ELEE/RFL	3	0.1	1,988	ALREADY EXISTS		
IN	2472	Wayne Hills-High S	Classroom 266	2	3L4' T8 32w/EL	9	0.8	2L4' T8 28w/ELEE/RFL	9	0.4	1,988	ALREADY EXISTS		
IN	2473	Wayne Hills-High S	Classroom 266	2	3L4' T8 32w/EL	3	0.3	2L4' T8 28w/ELEE/RFL	3	0.1	1,988	ALREADY EXISTS		
IN	2474	Wayne Hills-High S	Classroom 266	2	2L4' T8 28w/ELEE	1	0.0	2L4' T8 28w/ELEE/RFL	1	0.0	1,988	ALREADY EXISTS		
IN	2475	Wayne Hills-High S	Hall 266 To 264	2	3L2' T8 17w/EL	5	0.2	3L2' T8 15w/ELEE LO	5	0.2	2,548	ALREADY EXISTS		
IN	2476	Wayne Hills-High S	Storage 267 Sc	2	4L4' T8 32w/EL-8'	1	0.1	2L4' T8 28w/ELEE HI/NEW-8'	1	0.1	500	OCC SENSOR WALLSWITCH	1	10
IN	2477	Wayne Hills-High S	Storage 267 Sc	2	2L4' T8 28w/ELEE	2	0.1	1L4' T8 28w/ELEE HI/NEW	2	0.1	500	INCLUDED ABOVE		10
IN	2478	Wayne Hills-High S	Bath 263 Wt	2	2L4' T8 28w/ELEE	1	0.0	1L4' T8 28w/ELEE HI/NEW	1	0.0	3,640	OCC SENSOR CORNER MT.	1	36
IN	2479	Wayne Hills-High S	Bath 263 Wt	2	4L4' T8 32w/EL-8'	1	0.1	2L4' T8 28w/ELEE HI/NEW-8'	1	0.1	3,640	INCLUDED ABOVE		70
IN	2480	Wayne Hills-High S	Bath 263 Wt	2	2L2' T8 17w/EL	1	0.0	2L2' T8 15w/ELEE LO/NEW	1	0.0	3,640	INCLUDED ABOVE		26

In or Out	Line	Building Name	Location	Fl	Pre Fixture Description	Pre Qty	Pre kW	Post Fixture Description	Post Qty	Post kW	Annual Hours	*Control Description*	*Control Qty*	Control kWH Saved
IN	2481	Wayne Hills-High S	Classroom 265	2	2L4' T8 32w/EL	3	0.2	2L4' T8 28w/ELEE/RFL	3	0.1	1,988	ALREADY EXISTS		
IN	2482	Wayne Hills-High S	Classroom 265	2	3L4' T8 32w/EL	9	0.8	2L4' T8 28w/ELEE/RFL	9	0.4	1,988	ALREADY EXISTS		
IN	2483	Wayne Hills-High S	Classroom 265	2	3L4' T8 32w/EL	3	0.3	2L4' T8 28w/ELEE/RFL	3	0.1	1,988	ALREADY EXISTS		
IN	2484	Wayne Hills-High S	Classroom 265	2	2L4' T8 28w/ELEE	1	0.0	2L4' T8 28w/ELEE/RFL	1	0.0	1,988	ALREADY EXISTS		
IN	2485	Wayne Hills-High S	Bath 263 Mt	2	2L4' T8 28w/ELEE	1	0.0	1L4' T8 28w/ELEE HI/NEW	1	0.0	3,640	OCC SENSOR CORNER MT.	1	36
IN	2486	Wayne Hills-High S	Bath 263 Mt	2	4L4' T8 32w/EL-8'	1	0.1	2L4' T8 28w/ELEE HI/NEW-8'	1	0.1	3,640	INCLUDED ABOVE		70
IN	2487	Wayne Hills-High S	Bath 263 Mt	2	2L2' T8 17w/EL	1	0.0	2L2' T8 15w/ELEE LO/NEW	1	0.0	3,640	INCLUDED ABOVE		26
IN	2488	Wayne Hills-High S	Classroom 264	2	2L4' T8 32w/EL	3	0.2	2L4' T8 28w/ELEE/RFL	3	0.1	1,988	ALREADY EXISTS		
IN	2489	Wayne Hills-High S	Classroom 264	2	3L4' T8 32w/EL	9	0.8	2L4' T8 28w/ELEE/RFL	9	0.4	1,988	ALREADY EXISTS		
IN	2490	Wayne Hills-High S	Classroom 264	2	3L4' T8 32w/EL	3	0.3	2L4' T8 28w/ELEE/RFL	3	0.1	1,988	ALREADY EXISTS		
IN	2491	Wayne Hills-High S	Classroom 264	2	2L4' T8 28w/ELEE	1	0.0	2L4' T8 28w/ELEE/RFL	1	0.0	1,988	ALREADY EXISTS		
IN	2492	Wayne Hills-High S	Office 262 Copy	2	3L4' T8 32w/EL	6	0.5	3L4' T8 28w/ELEE LO	6	0.4	2,840	OCC SENSOR CEILING	1	322
IN	2493	Wayne Hills-High S	Office 262 Ao	2	3L4' T8 32w/EL	6	0.5	3L4' T8 28w/ELEE LO	6	0.4	2,840	OCC SENSOR CEILING	1	322
IN	2494	Wayne Hills-High S	Stair West 4	s	2L4' T8 32w/EL	4	0.2	2L4' T8 28w/ELEE LO/NEW	4	0.2	3,640	NO RETRO		
IN	2495	Wayne Hills-High S	Bath 263 Gt	2	3L2' T8 17w/EL	5	0.2	3L2' T8 15w/ELEE LO	5	0.2	3,640	OCC SENSOR CORNER MT.	1	213
IN	2496	Wayne Hills-High S	Closet Clean	2	1L4' T8 32w/EL	1	0.0	1L4' T8 28w/ELEE HI/NEW	1	0.0	500	OCC SENSOR WALLSWITCH	1	5
IN	2497	Wayne Hills-High S	Bath 263 Bt	2	3L2' T8 17w/EL	5	0.2	3L2' T8 15w/ELEE LO	5	0.2	3,640	OCC SENSOR CORNER MT.	1	213
IN	2498	Wayne Hills-High S	Classroom 260	2	2L4' T8 32w/EL	3	0.2	2L4' T8 28w/ELEE/RFL	3	0.1	1,988	ALREADY EXISTS		
IN	2499	Wayne Hills-High S	Classroom 260	2	3L4' T8 32w/EL	9	0.8	2L4' T8 28w/ELEE/RFL	9	0.4	1,988	ALREADY EXISTS		
IN	2500	Wayne Hills-High S	Classroom 260	2	3L4' T8 32w/EL	3	0.3	2L4' T8 28w/ELEE/RFL	3	0.1	1,988	ALREADY EXISTS		
IN	2501	Wayne Hills-High S	Classroom 260	2	2L4' T8 28w/ELEE	1	0.0	2L4' T8 28w/ELEE/RFL	1	0.0	1,988	ALREADY EXISTS		
IN	2502	Wayne Hills-High S	Classroom 258	2	2L4' T8 32w/EL	3	0.2	2L4' T8 28w/ELEE/RFL	3	0.1	1,988	ALREADY EXISTS		
IN	2503	Wayne Hills-High S	Classroom 258	2	3L4' T8 32w/EL	9	0.8	2L4' T8 28w/ELEE/RFL	9	0.4	1,988	ALREADY EXISTS		
IN	2504	Wayne Hills-High S	Classroom 258	2	3L4' T8 32w/EL	3	0.3	2L4' T8 28w/ELEE/RFL	3	0.1	1,988	ALREADY EXISTS		
IN	2505	Wayne Hills-High S	Classroom 258	2	2L4' T8 28w/ELEE	1	0.0	2L4' T8 28w/ELEE/RFL	1	0.0	1,988	ALREADY EXISTS		
IN	2506	Wayne Hills-High S	Classroom 261	2	6L4' T8 32w/EL-8'	12	2.2	6L4' T8 28w/ELEE LO-8'	12	1.5	2,840	OCC SENSOR CORNER MT.	1	1,288
IN	2507	Wayne Hills-High S	Closet Clean	2	60W INCANDESCENT	1	0.1	13 WATT LED/NEW	1	0.0	500	OCC SENSOR WALLSWITCH	1	2
IN	2508	Wayne Hills-High S	Classroom 256	2	4L4' T8 32w/EL-8'	4	0.4	2L4' T8 28w/ELEE HI/NEW-8'	4	0.3	1,988	ALREADY EXISTS		
IN	2509	Wayne Hills-High S	Classroom 256	2	2L4' T8 28w/ELEE	2	0.1	1L4' T8 28w/ELEE HI/NEW	2	0.1	1,988	ALREADY EXISTS		
IN	2510	Wayne Hills-High S	Classroom 256	2	4L4' T8 32w/EL-8'	6	0.7	2L4' T8 28w/ELEE HI/NEW-8'	6	0.4	1,988	ALREADY EXISTS		
IN	2511	Wayne Hills-High S	Classroom 256	2	2L4' T8 28w/ELEE	2	0.1	1L4' T8 28w/ELEE HI/NEW	2	0.1	1,988	ALREADY EXISTS		
IN	2512	Wayne Hills-High S	Closet Clean	2	60W INCANDESCENT	1	0.1	13 WATT LED/NEW	1	0.0	500	OCC SENSOR WALLSWITCH	1	2
IN	2513	Wayne Hills-High S	Stair By 257	s	2L2' F40 BIAX/EL	2	0.1	2L2' F40BIAX/EL28W	2	0.1	3,640	NO RETRO		
IN	2514	Wayne Hills-High S	Stair By 257	s	2L4' T8 U/EL	1	0.1	2L2' T8 15w/ELEE HI/RFL	1	0.0	3,640	NO RETRO		
IN	2515	Wayne Hills-High S	Stair By 257	s	3L4' T8 32w/EL	1	0.1	3L4' T8 28w/ELEE LO	1	0.1	3,640	NO RETRO		
IN	2516	Wayne Hills-High S	Classroom 253	2	2L4' T8 U/EL	4	0.2	2L2' T8 15w/ELEE HI/RFL	4	0.1	2,840	OCC SENSOR CEILING	1	112
IN	2517	Wayne Hills-High S	Classroom 253	2	4L4' T8 32w/EL-8'	3	0.3	2L4' T8 28w/ELEE HI/NEW-8'	3	0.2	2,840	INCLUDED ABOVE		164
IN	2518	Wayne Hills-High S	Classroom 253	2	2L4' T8 28w/ELEE	1	0.0	1L4' T8 28w/ELEE HI/NEW	1	0.0	2,840	INCLUDED ABOVE		28
IN	2519	Wayne Hills-High S	Classroom 253	2	4L4' T8 32w/EL-8'	6	0.7	2L4' T8 28w/ELEE HI/NEW-8'	6	0.4	1,988	ALREADY EXISTS		
IN	2520	Wayne Hills-High S	Classroom 253	2	2L4' T8 28w/ELEE	2	0.1	1L4' T8 28w/ELEE HI/NEW	2	0.1	1,988	ALREADY EXISTS		

In or Out	Line	Building Name	Location	Fl	Pre Fixture Description	Pre Qty	Pre kW	Post Fixture Description	Post Qty	Post kW	Annual Hours	*Control Description*	*Control Qty*	Control kWH Saved
IN	2521	Wayne Hills-High S	Bath 254 Gt	2	2L4' T8 28w/ELEE	2	0.1	1L4' T8 28w/ELEE HI/NEW	2	0.1	3,640	OCC SENSOR CORNER MT.	1	72
IN	2522	Wayne Hills-High S	Closet Clean	2	100W INCANDESCENT	1	0.1	23W COMPACT SI/29712/CF23I	1	0.0	500	OCC SENSOR WALLSWITCH	1	3
IN	2523	Wayne Hills-High S	Classroom 252	2	3L4' T8 32w/EL	6	0.5	2L4' T8 28w/ELEE/RFL	6	0.3	1,988	ALREADY EXISTS		
IN	2524	Wayne Hills-High S	Classroom 251	2	3L4' T8 32w/EL	6	0.5	2L4' T8 28w/ELEE/RFL	6	0.3	1,988	ALREADY EXISTS		
IN	2525	Wayne Hills-High S	Classroom 250	2	3L4' T8 32w/EL	6	0.5	2L4' T8 28w/ELEE/RFL	6	0.3	1,988	ALREADY EXISTS		
IN	2526	Wayne Hills-High S	Classroom 249	2	3L4' T8 32w/EL	6	0.5	2L4' T8 28w/ELEE/RFL	6	0.3	1,988	ALREADY EXISTS		
IN	2527	Wayne Hills-High S	Classroom 248	2	3L4' T8 32w/EL	6	0.5	2L4' T8 28w/ELEE/RFL	6	0.3	1,988	ALREADY EXISTS		
IN	2528	Wayne Hills-High S	Classroom 247	2	3L4' T8 32w/EL	6	0.5	2L4' T8 28w/ELEE/RFL	6	0.3	1,988	ALREADY EXISTS		
IN	2529	Wayne Hills-High S	Classroom 246	2	3L4' T8 32w/EL	6	0.5	2L4' T8 28w/ELEE/RFL	6	0.3	1,988	ALREADY EXISTS		
IN	2530	Wayne Hills-High S	Classroom 245	2	3L4' T8 32w/EL	6	0.5	2L4' T8 28w/ELEE/RFL	6	0.3	1,988	ALREADY EXISTS		
IN	2531	Wayne Hills-High S	Hall 256 To 245	2	3L2' T8 17w/EL	14	0.7	3L2' T8 15w/ELEE LO	14	0.5	2,548	ALREADY EXISTS		
IN	2532	Wayne Hills-High S	Hall 202 To 257	2	3L2' T8 17w/EL	8	0.4	3L2' T8 15w/ELEE LO	8	0.3	2,548	ALREADY EXISTS		
IN	2533	Wayne Hills-High S	Bath Men	2	2L4' T8 32w/EL	2	0.1	1L4' T8 28w/ELEE HI/NEW	2	0.1	3,640	OCC SENSOR CORNER MT.	1	72
IN	2534	Wayne Hills-High S	Gym 257 Weight Room	2	4L4' T8 32w/EL-8'	20	2.2	2L4' T8 28w/ELEE HI/NEW-8'	20	1.3	3,440	NO RETRO		
IN	2535	Wayne Hills-High S	Gym 257 Weight Room	2	4L4' T8 32w/EL-8'	5	0.6	2L4' T8 28w/ELEE HI/NEW-8'	5	0.3	3,440	NO RETRO		
IN	2536	Wayne Hills-High S	Gym 257 Weight Room	2	2x60W INCANDESCENTS	1	0.1	2L2' T8 15w/ELEE LO/NEW	1	0.0	3,440	TIMER WALLSWITCH 1GANG	1	25
IN	2537	Wayne Hills-High S	Gym 257 Weight Room	2	2x60W INCANDESCENTS	1	0.1	2L2' T8 15w/ELEE LO/NEW	1	0.0	3,440	TIMER WALLSWITCH 1GANG	1	25
IN	2538	Wayne Hills-High S	Mechanical 206	2	23W COMPACT HARDWIF	8	0.2	NO RETRO		0.2	500	NO RETRO		
IN	2539	Wayne Hills-High S	Classroom 202 Cardio	2	4L4' T8 32w/EL-8'	20	2.2	2L4' T8 28w/ELEE HI/NEW-8'	20	1.3	2,840	NO RETRO		
IN	2540	Wayne Hills-High S	Classroom 202 Cardio	2	2x60W INCANDESCENTS	1	0.1	2L2' T8 15w/ELEE LO/NEW	1	0.0	2,840	OCC SENSOR WALLSWITCH	1	20
IN	2541	Wayne Hills-High S	Classroom 202 Cardio	2	2x60W INCANDESCENTS	1	0.1	2L2' T8 15w/ELEE LO/NEW	1	0.0	2,840	OCC SENSOR WALLSWITCH	1	20
IN	2542	Wayne Hills-High S	Stair 202 Cardio	s	2L4' T8 28w/ELEE	2	0.1	1L4' T8 28w/ELEE HI/NEW	2	0.1	3,640	NO RETRO		
IN	2543	Wayne Hills-High S	Stair 202 Cardio	s	2L2' T8 17w/EL	1	0.0	2L2' T8 15w/ELEE LO/NEW	1	0.0	3,640	NO RETRO		
IN	2544	Wayne Hills-High S	Hall Foot Bridge By 201A	2	3L2' T8 17w/EL	3	0.1	3L2' T8 15w/ELEE LO	3	0.1	3,640	DAYLIGHT HARVESTING SYS	3	213
IN	2545	Wayne Hills-High S	Hall Foot Bridge By 201A	2	13W COMPACT HARDWIF	2	0.0	NO RETRO		0.0	3,640	NO RETRO		
IN	2546	Wayne Hills-High S	Stair West 3	s	2L4' T8 32w/EL	4	0.2	2L4' T8 28w/ELEE LO/NEW	4	0.2	3,640	NO RETRO		
IN	2547	Wayne Hills-High S	Closet Clean	2	2x18W COMPACT HARDV	1	0.0	2L2' T8 15w/ELEE LO/NEW	1	0.0	500	OCC SENSOR WALLSWITCH	1	4
IN	2548	Wayne Hills-High S	Classroom 201	2	4L4' T8 32w/EL-8'	3	0.3	2L4' T8 28w/ELEE HI/NEW-8'	3	0.2	1,988	ALREADY EXISTS		
IN	2549	Wayne Hills-High S	Classroom 201	2	2L4' T8 28w/ELEE	1	0.0	1L4' T8 28w/ELEE HI/NEW	1	0.0	1,988	ALREADY EXISTS		
IN	2550	Wayne Hills-High S	Classroom 201	2	4L4' T8 32w/EL-8'	6	0.7	2L4' T8 28w/ELEE HI/NEW-8'	6	0.4	1,988	ALREADY EXISTS		
IN	2551	Wayne Hills-High S	Classroom 201	2	2L4' T8 28w/ELEE	2	0.1	1L4' T8 28w/ELEE HI/NEW	2	0.1	1,988	ALREADY EXISTS		
IN	2552	Wayne Hills-High S	Closet 202 Cc Clean	2	23W COMPACT HARDWIF	1	0.0	NO RETRO		0.0	500	OCC SENSOR WALLSWITCH	1	4
IN	2553	Wayne Hills-High S	Classroom 203	2	4L4' T8 32w/EL-8'	2	0.2	2L4' T8 28w/ELEE HI/NEW-8'	2	0.1	1,988	ALREADY EXISTS		
IN	2554	Wayne Hills-High S	Classroom 203	2	2L4' T8 28w/ELEE	1	0.0	1L4' T8 28w/ELEE HI/NEW	1	0.0	1,988	ALREADY EXISTS		
IN	2555	Wayne Hills-High S	Classroom 203	2	4L4' T8 32w/EL-8'	4	0.4	2L4' T8 28w/ELEE HI/NEW-8'	4	0.3	1,988	ALREADY EXISTS		
IN	2556	Wayne Hills-High S	Classroom 203	2	2L4' T8 28w/ELEE	2	0.1	1L4' T8 28w/ELEE HI/NEW	2	0.1	1,988	ALREADY EXISTS		
IN	2557	Wayne Hills-High S	Classroom 205	2	4L4' T8 32w/EL-8'	2	0.2	2L4' T8 28w/ELEE HI/NEW-8'	2	0.1	1,988	ALREADY EXISTS		
IN	2558	Wayne Hills-High S	Classroom 205	2	2L4' T8 28w/ELEE	1	0.0	1L4' T8 28w/ELEE HI/NEW	1	0.0	1,988	ALREADY EXISTS		
IN	2559	Wayne Hills-High S	Classroom 205	2	4L4' T8 32w/EL-8'	4	0.4	2L4' T8 28w/ELEE HI/NEW-8'	4	0.3	1,988	ALREADY EXISTS		
IN	2560	Wayne Hills-High S	Classroom 205	2	2L4' T8 28w/ELEE	2	0.1	1L4' T8 28w/ELEE HI/NEW	2	0.1	1,988	ALREADY EXISTS		

In or Out	Line	Building Name	Location	Fl	Pre Fixture Description	Pre Qty	Pre kW	Post Fixture Description	Post Qty	Post kW	Annual Hours	*Control Description*	*Control Qty*	Control kWH Saved
IN	2561	Wayne Hills-High S	Classroom 207	2	4L4' T8 32w/EL-8'	2	0.2	2L4' T8 28w/ELEE HI/NEW-8'	2	0.1	1,988	ALREADY EXISTS		
IN	2562	Wayne Hills-High S	Classroom 207	2	2L4' T8 28w/ELEE	1	0.0	1L4' T8 28w/ELEE HI/NEW	1	0.0	1,988	ALREADY EXISTS		
IN	2563	Wayne Hills-High S	Classroom 207	2	4L4' T8 32w/EL-8'	4	0.4	2L4' T8 28w/ELEE HI/NEW-8'	4	0.3	1,988	ALREADY EXISTS		
IN	2564	Wayne Hills-High S	Classroom 207	2	2L4' T8 28w/ELEE	2	0.1	1L4' T8 28w/ELEE HI/NEW	2	0.1	1,988	ALREADY EXISTS		
IN	2565	Wayne Hills-High S	Classroom 209	2	4L4' T8 32w/EL-8'	2	0.2	2L4' T8 28w/ELEE HI/NEW-8'	2	0.1	1,988	ALREADY EXISTS		
IN	2566	Wayne Hills-High S	Classroom 209	2	2L4' T8 28w/ELEE	1	0.0	1L4' T8 28w/ELEE HI/NEW	1	0.0	1,988	ALREADY EXISTS		
IN	2567	Wayne Hills-High S	Classroom 209	2	4L4' T8 32w/EL-8'	4	0.4	2L4' T8 28w/ELEE HI/NEW-8'	4	0.3	1,988	ALREADY EXISTS		
IN	2568	Wayne Hills-High S	Classroom 209	2	2L4' T8 28w/ELEE	2	0.1	1L4' T8 28w/ELEE HI/NEW	2	0.1	1,988	ALREADY EXISTS		
IN	2569	Wayne Hills-High S	Classroom 211	2	4L4' T8 32w/EL-8'	2	0.2	2L4' T8 28w/ELEE HI/NEW-8'	2	0.1	1,988	ALREADY EXISTS		
IN	2570	Wayne Hills-High S	Classroom 211	2	2L4' T8 28w/ELEE	1	0.0	1L4' T8 28w/ELEE HI/NEW	1	0.0	1,988	ALREADY EXISTS		
IN	2571	Wayne Hills-High S	Classroom 211	2	4L4' T8 32w/EL-8'	4	0.4	2L4' T8 28w/ELEE HI/NEW-8'	4	0.3	1,988	ALREADY EXISTS		
IN	2572	Wayne Hills-High S	Classroom 211	2	2L4' T8 28w/ELEE	2	0.1	1L4' T8 28w/ELEE HI/NEW	2	0.1	1,988	ALREADY EXISTS		
IN	2573	Wayne Hills-High S	Classroom 212	2	4L4' T8 32w/EL-8'	2	0.2	2L4' T8 28w/ELEE HI/NEW-8'	2	0.1	1,988	ALREADY EXISTS		
IN	2574	Wayne Hills-High S	Classroom 212	2	2L4' T8 28w/ELEE	1	0.0	1L4' T8 28w/ELEE HI/NEW	1	0.0	1,988	ALREADY EXISTS		
IN	2575	Wayne Hills-High S	Classroom 212	2	4L4' T8 32w/EL-8'	4	0.4	2L4' T8 28w/ELEE HI/NEW-8'	4	0.3	1,988	ALREADY EXISTS		
IN	2576	Wayne Hills-High S	Classroom 212	2	2L4' T8 28w/ELEE	2	0.1	1L4' T8 28w/ELEE HI/NEW	2	0.1	1,988	ALREADY EXISTS		
IN	2577	Wayne Hills-High S	Hall 201 To 227	2	3L2' T8 17w/EL	34	1.6	3L2' T8 15w/ELEE LO	34	1.3	2,548	ALREADY EXISTS		
IN	2578	Wayne Hills-High S	Office 216	2	3L4' T8 32w/EL	4	0.4	3L4' T8 28w/ELEE LO	4	0.3	2,840	OCC SENSOR CEILING	1	215
IN	2579	Wayne Hills-High S	Stair West 2	s	2L4' T8 32w/EL	9	0.5	2L4' T8 28w/ELEE LO/NEW	9	0.4	3,640	NO RETRO		
IN	2580	Wayne Hills-High S	Library	2	3L4' T8 32w/EL	60	5.3	2L4' T8 28w/ELEE HI/RFL	60	3.8	2,840	NO RETRO		
IN	2581	Wayne Hills-High S	Library	2	1L4' T8 32w/EL	36	1.1	1L4' T8 28w/ELEE LO	36	0.8	2,840	NO RETRO		
IN	2582	Wayne Hills-High S	Library	2	4L4' T8 32w/EL-8'	6	0.7	2L4' T8 28w/ELEE HI/NEW-8'	6	0.4	2,840	NO RETRO		
IN	2583	Wayne Hills-High S	Library	2	3L4' T8 32w/EL	20	1.8	2L4' T8 28w/ELEE HI/RFL	20	1.3	2,840	INCLUDED ABOVE		1,091
IN	2584	Wayne Hills-High S	Office Mihalasky	2	3L4' T8 32w/EL	4	0.4	3L4' T8 28w/ELEE LO	4	0.3	2,840	OCC SENSOR WALLSWITCH	1	215
IN	2585	Wayne Hills-High S	Storage Mihalasky	2	60W INCANDESCENT	1	0.1	23W COMPACT SI/29712/CF23I	1	0.0	500	OCC SENSOR WALLSWITCH	1	3
IN	2586	Wayne Hills-High S	Office Open Break Room	2	3L4' T8 32w/EL	10	0.9	3L4' T8 28w/ELEE LO	10	0.6	3,440	OCC SENSOR CEILING	2	650
IN	2587	Wayne Hills-High S	Storage Serv Er	2	3L4' T8 32w/EL	10	0.9	3L4' T8 28w/ELEE LO	10	0.6	500	OCC SENSOR CEILING	2	95
IN	2588	Wayne Hills-High S	Lounge Staff	2	4L4' T8 32w/EL-8'	12	1.3	2L4' T8 28w/ELEE HI/NEW-8'	12	0.8	2,520	OCC SENSOR CEILING	4	581
IN	2589	Wayne Hills-High S	Lounge Staff	2	2L4' T8 32w/EL	6	0.4	1L4' T8 28w/ELEE HI/NEW	6	0.2	2,520	OCC SENSOR CEILING	1	150
IN	2590	Wayne Hills-High S	Office 214	2	4L4' T8 32w/EL-8'	2	0.2	2L4' T8 28w/ELEE HI/NEW-8'	2	0.1	2,840	OCC SENSOR CEILING	1	109
IN	2591	Wayne Hills-High S	Office 214	2	2L4' T8 28w/ELEE	2	0.1	1L4' T8 28w/ELEE HI/NEW	2	0.1	2,840	INCLUDED ABOVE		56
IN	2592	Wayne Hills-High S	Classroom 213	2	4L4' T8 32w/EL-8'	2	0.2	2L4' T8 28w/ELEE HI/NEW-8'	2	0.1	1,988	ALREADY EXISTS		
IN	2593	Wayne Hills-High S	Classroom 213	2	2L4' T8 28w/ELEE	1	0.0	1L4' T8 28w/ELEE HI/NEW	1	0.0	1,988	ALREADY EXISTS		
IN	2594	Wayne Hills-High S	Classroom 213	2	4L4' T8 32w/EL-8'	4	0.4	2L4' T8 28w/ELEE HI/NEW-8'	4	0.3	1,988	ALREADY EXISTS		
IN	2595	Wayne Hills-High S	Classroom 213	2	2L4' T8 28w/ELEE	2	0.1	1L4' T8 28w/ELEE HI/NEW	2	0.1	1,988	ALREADY EXISTS		
IN	2596	Wayne Hills-High S	Classroom 215	2	4L4' T8 32w/EL-8'	3	0.3	2L4' T8 28w/ELEE HI/NEW-8'	3	0.2	1,988	ALREADY EXISTS		
IN	2597	Wayne Hills-High S	Classroom 215	2	4L4' T8 32w/EL-8'	6	0.7	2L4' T8 28w/ELEE HI/NEW-8'	6	0.4	1,988	ALREADY EXISTS		
IN	2598	Wayne Hills-High S	Classroom 217	2	4L4' T8 32w/EL-8'	2	0.2	2L4' T8 28w/ELEE HI/NEW-8'	2	0.1	1,988	ALREADY EXISTS		
IN	2599	Wayne Hills-High S	Classroom 217	2	2L4' T8 28w/ELEE	1	0.0	1L4' T8 28w/ELEE HI/NEW	1	0.0	1,988	ALREADY EXISTS		
IN	2600	Wayne Hills-High S	Classroom 217	2	4L4' T8 32w/EL-8'	4	0.4	2L4' T8 28w/ELEE HI/NEW-8'	4	0.3	1,988	ALREADY EXISTS		

In or Out	Line	Building Name	Location	Fl	Pre Fixture Description	Pre Qty	Pre kW	Post Fixture Description	Post Qty	Post kW	Annual Hours	*Control Description*	*Control Qty*	Control kWH Saved
IN	2601	Wayne Hills-High S	Classroom 217	2	2L4' T8 28w/ELEE	2	0.1	1L4' T8 28w/ELEE HI/NEW	2	0.1	1,988	ALREADY EXISTS		
IN	2602	Wayne Hills-High S	Classroom 221	2	4L4' T8 32w/EL-8'	2	0.2	2L4' T8 28w/ELEE HI/NEW-8'	2	0.1	1,988	ALREADY EXISTS		
IN	2603	Wayne Hills-High S	Classroom 221	2	2L4' T8 28w/ELEE	1	0.0	1L4' T8 28w/ELEE HI/NEW	1	0.0	1,988	ALREADY EXISTS		
IN	2604	Wayne Hills-High S	Classroom 221	2	4L4' T8 32w/EL-8'	4	0.4	2L4' T8 28w/ELEE HI/NEW-8'	4	0.3	1,988	ALREADY EXISTS		
IN	2605	Wayne Hills-High S	Classroom 221	2	2L4' T8 28w/ELEE	2	0.1	1L4' T8 28w/ELEE HI/NEW	2	0.1	1,988	ALREADY EXISTS		
IN	2606	Wayne Hills-High S	Classroom 223	2	4L4' T8 32w/EL-8'	2	0.2	2L4' T8 28w/ELEE HI/NEW-8'	2	0.1	1,988	ALREADY EXISTS		
IN	2607	Wayne Hills-High S	Classroom 223	2	2L4' T8 28w/ELEE	1	0.0	1L4' T8 28w/ELEE HI/NEW	1	0.0	1,988	ALREADY EXISTS		
IN	2608	Wayne Hills-High S	Classroom 223	2	4L4' T8 32w/EL-8'	4	0.4	2L4' T8 28w/ELEE HI/NEW-8'	4	0.3	1,988	ALREADY EXISTS		
IN	2609	Wayne Hills-High S	Classroom 223	2	2L4' T8 28w/ELEE	2	0.1	1L4' T8 28w/ELEE HI/NEW	2	0.1	1,988	ALREADY EXISTS		
IN	2610	Wayne Hills-High S	Classroom 225	2	4L4' T8 32w/EL-8'	2	0.2	2L4' T8 28w/ELEE HI/NEW-8'	2	0.1	1,988	ALREADY EXISTS		
IN	2611	Wayne Hills-High S	Classroom 225	2	2L4' T8 28w/ELEE	1	0.0	1L4' T8 28w/ELEE HI/NEW	1	0.0	1,988	ALREADY EXISTS		
IN	2612	Wayne Hills-High S	Classroom 225	2	4L4' T8 32w/EL-8'	4	0.4	2L4' T8 28w/ELEE HI/NEW-8'	4	0.3	1,988	ALREADY EXISTS		
IN	2613	Wayne Hills-High S	Classroom 225	2	2L4' T8 28w/ELEE	2	0.1	1L4' T8 28w/ELEE HI/NEW	2	0.1	1,988	ALREADY EXISTS		
IN	2614	Wayne Hills-High S	Classroom 227	2	4L4' T8 32w/EL-8'	2	0.2	2L4' T8 28w/ELEE HI/NEW-8'	2	0.1	1,988	ALREADY EXISTS		
IN	2615	Wayne Hills-High S	Classroom 227	2	2L4' T8 28w/ELEE	1	0.0	1L4' T8 28w/ELEE HI/NEW	1	0.0	1,988	ALREADY EXISTS		
IN	2616	Wayne Hills-High S	Classroom 227	2	4L4' T8 32w/EL-8'	4	0.4	2L4' T8 28w/ELEE HI/NEW-8'	4	0.3	1,988	ALREADY EXISTS		
IN	2617	Wayne Hills-High S	Classroom 227	2	2L4' T8 28w/ELEE	2	0.1	1L4' T8 28w/ELEE HI/NEW	2	0.1	1,988	ALREADY EXISTS		
IN	2618	Wayne Hills-High S	Bath 226Bt Boys	2	2L4' T8 28w/ELEE	2	0.1	1L4' T8 28w/ELEE HI/NEW	2	0.1	3,640	OCC SENSOR CEIL DT 1GAN	1	72
IN	2619	Wayne Hills-High S	Bath 226Bt Boys	2	2x13W COMPACT HARDV	1	0.0	NO RETRO		0.0	3,640	INCLUDED ABOVE		33
IN	2620	Wayne Hills-High S	Bath 226Gt Girls	2	2L4' T8 28w/ELEE	2	0.1	1L4' T8 28w/ELEE HI/NEW	2	0.1	3,640	OCC SENSOR CEIL DT 1GAN	1	72
IN	2621	Wayne Hills-High S	Bath 226Gt Girls	2	2x13W COMPACT HARDV	1	0.0	NO RETRO		0.0	3,640	INCLUDED ABOVE		33
IN	2622	Wayne Hills-High S	Office 224	2	4L4' T8 32w/EL-8'	3	0.3	2L4' T8 28w/ELEE HI/NEW-8'	3	0.2	2,840	NO RETRO		
IN	2623	Wayne Hills-High S	Office 224	2	2L4' T8 28w/ELEE	2	0.1	1L4' T8 28w/ELEE HI/NEW	2	0.1	2,840	NO RETRO		
IN	2624	Wayne Hills-High S	Office 224	2	3L2' T8 17w/EL	4	0.2	3L2' T8 15w/ELEE LO	4	0.2	2,840	OCC SENSOR CEILING	1	133
IN	2625	Wayne Hills-High S	Closet 224 Sc	2	2L4' T8 28w/ELEE	2	0.1	1L4' T8 28w/ELEE HI/NEW	2	0.1	500	OCC SENSOR WALLSWITCH	1	10
IN	2626	Wayne Hills-High S	Storage Staff	2	2L4' T8 28w/ELEE	1	0.0	1L4' T8 28w/ELEE HI/NEW	1	0.0	500	OCC SENSOR WALLSWITCH	1	5
IN	2627	Wayne Hills-High S	Bath 222 Wt Women	2	2L2' F40 BIAX/EL	1	0.1	2L2' F40BIAX/EL28W	1	0.1	3,640	OCC SENSOR CEIL DT 1GAN	1	69
IN	2628	Wayne Hills-High S	Bath 222 Wt Women	2	2L4' T8 28w/ELEE	2	0.1	2L4' T8 28w/ELEE LO	2	0.1	3,640	INCLUDED ABOVE		92
IN	2629	Wayne Hills-High S	Bath 222 Wt Women	2	2L4' T12 EE/EEMAG	1	0.1	2L4' T8 28w/ELEE LO/NEW	1	0.0	3,640	INCLUDED ABOVE		46
IN	2630	Wayne Hills-High S	Bath 222 Mt Men	2	2L4' T8 U 1.5"/EL	1	0.1	NO RETRO		0.1	3,640	OCC SENSOR CEIL DT 1GAN	1	63
IN	2631	Wayne Hills-High S	Bath 222 Mt Men	2	2L4' T8 28w/ELEE	2	0.1	2L4' T8 28w/ELEE LO	2	0.1	3,640	INCLUDED ABOVE		92
IN	2632	Wayne Hills-High S	Bath 222 Mt Men	2	2L4' T12 EE/EEMAG	1	0.1	2L4' T8 28w/ELEE LO/NEW	1	0.0	3,640	INCLUDED ABOVE		46
IN	2633	Wayne Hills-High S	Closet Clean	2	23W COMPACT HARDWI	2	0.0	NO RETRO		0.0	500	OCC SENSOR WALLSWITCH	1	7
IN	2634	Wayne Hills-High S	Storage 219 Sc	2	4L4' T12 EE/EEMAG-8'	2	0.3	2L4' T8 28w/ELEE HI/NEW-8'	2	0.1	500	TIMER WALLSWITCH 1GANG	1	19
IN	2635	Wayne Hills-High S	Storage 219 Sc	2	2L4' T12 EE/EEMAG	2	0.1	1L4' T8 28w/ELEE HI/NEW	2	0.1	500	INCLUDED ABOVE		10
IN	2636	Wayne Hills-High S	Hall 217 To 240	2	3L2' T8 17w/EL	10	0.5	3L2' T8 15w/ELEE LO	10	0.4	3,640	NO RETRO		
IN	2637	Wayne Hills-High S	Office 219 Ao	2	4L4' T8 32w/EL-8'	2	0.2	2L4' T8 28w/ELEE HI/NEW-8'	2	0.1	2,840	OCC SENSOR CEILING	1	109
IN	2638	Wayne Hills-High S	Storage 219 Ao	2	4L4' T8 32w/EL-8'	1	0.1	2L4' T8 28w/ELEE HI/NEW-8'	1	0.1	500	OCC SENSOR WALLSWITCH	1	10
IN	2639	Wayne Hills-High S	Office 219 Av Projection Room	2	3L4' T8 32w/EL	2	0.2	3L4' T8 28w/ELEE LO	2	0.1	2,840	NO RETRO		
IN	2640	Wayne Hills-High S	Office 219 Av Projection Room	2	60W INCANDESCENT	8	0.5	12 WATT LED/KIT	8	0.1	2,840	NO RETRO		

In or Out	Line	Building Name	Location	Fl	Pre Fixture Description	Pre Qty	Pre kW	Post Fixture Description	Post Qty	Post kW	Annual Hours	*Control Description*	*Control Qty*	Control kWH Saved
IN	2641	Wayne Hills-High S	Conference 219 Cr	2	4L4' T8 32w/EL-8'	2	0.2	2L4' T8 28w/ELEE HI/NEW-8'	2	0.1	2,840	OCC SENSOR WALLSWITCH	1	109
IN	2642	Wayne Hills-High S	Office 219 Bo	2	4L4' T8 32w/EL-8'	2	0.2	2L4' T8 28w/ELEE HI/NEW-8'	2	0.1	2,840	OCC SENSOR WALLSWITCH	1	109
IN	2643	Wayne Hills-High S	Office 219 Co	2	3L4' T8 32w/EL	2	0.2	3L4' T8 28w/ELEE LO	2	0.1	2,840	OCC SENSOR WALLSWITCH	1	107
IN	2644	Wayne Hills-High S	Closet Clean	2	3L4' T8 32w/EL	2	0.2	3L4' T8 28w/ELEE LO	2	0.1	500	OCC SENSOR WALLSWITCH	1	19
IN	2645	Wayne Hills-High S	Storage 234	2	4L4' T8 32w/EL-8'	7	0.8	2L4' T8 28w/ELEE HI/NEW-8'	7	0.4	2,440	NO RETRO		
IN	2646	Wayne Hills-High S	Storage 234	2	2L4' T8 32w/EL	5	0.3	1L4' T8 28w/ELEE HI/NEW	5	0.2	2,440	NO RETRO		
IN	2647	Wayne Hills-High S	Storage 234	2	60W INCANDESCENT	2	0.1	2L2' T8 15w/ELEE LO/NEW	2	0.0	500	TIMER WALLSWITCH 1GANG	1	7
IN	2648	Wayne Hills-High S	Storage 234	2	60W INCANDESCENT	1	0.1	2L2' T8 15w/ELEE LO/NEW	1	0.0	500	TIMER WALLSWITCH 1GANG	1	4
IN	2649	Wayne Hills-High S	Stair East 5	s	2L4' T8 32w/EL	4	0.2	2L4' T8 28w/ELEE LO/NEW	4	0.2	3,640	NO RETRO		
IN	2650	Wayne Hills-High S	Office 232	2	4L4' T8 32w/EL-8'	6	0.7	2L4' T8 28w/ELEE HI/NEW-8'	6	0.4	1,988	ALREADY EXISTS		
IN	2651	Wayne Hills-High S	Classroom 233	2	4L4' T8 32w/EL-8'	4	0.4	2L4' T8 28w/ELEE HI/NEW-8'	4	0.3	1,988	ALREADY EXISTS		
IN	2652	Wayne Hills-High S	Classroom 233	2	2L4' T8 28w/ELEE	1	0.0	1L4' T8 28w/ELEE HI/NEW	1	0.0	1,988	ALREADY EXISTS		
IN	2653	Wayne Hills-High S	Classroom 233	2	4L4' T8 32w/EL-8'	7	0.8	2L4' T8 28w/ELEE HI/NEW-8'	7	0.4	1,988	ALREADY EXISTS		
IN	2654	Wayne Hills-High S	Office 233	2	4L4' T8 32w/EL-8'	3	0.3	2L4' T8 28w/ELEE HI/NEW-8'	3	0.2	2,840	OCC SENSOR CEILING	1	164
IN	2655	Wayne Hills-High S	Classroom 231	2	4L4' T8 32w/EL-8'	4	0.4	2L4' T8 28w/ELEE HI/NEW-8'	4	0.3	1,988	ALREADY EXISTS		
IN	2656	Wayne Hills-High S	Classroom 231	2	2L4' T8 28w/ELEE	1	0.0	1L4' T8 28w/ELEE HI/NEW	1	0.0	1,988	ALREADY EXISTS		
IN	2657	Wayne Hills-High S	Classroom 231	2	4L4' T8 32w/EL-8'	7	0.8	2L4' T8 28w/ELEE HI/NEW-8'	7	0.4	1,988	ALREADY EXISTS		
IN	2658	Wayne Hills-High S	Classroom 229	2	4L4' T8 32w/EL-8'	4	0.4	2L4' T8 28w/ELEE HI/NEW-8'	4	0.3	1,988	ALREADY EXISTS		
IN	2659	Wayne Hills-High S	Classroom 229	2	2L4' T8 28w/ELEE	1	0.0	1L4' T8 28w/ELEE HI/NEW	1	0.0	1,988	ALREADY EXISTS		
IN	2660	Wayne Hills-High S	Classroom 229	2	4L4' T8 32w/EL-8'	6	0.7	2L4' T8 28w/ELEE HI/NEW-8'	6	0.4	1,988	ALREADY EXISTS		
IN	2661	Wayne Hills-High S	Classroom 229	2	2L4' T8 28w/ELEE	2	0.1	1L4' T8 28w/ELEE HI/NEW	2	0.1	1,988	ALREADY EXISTS		
IN	2662	Wayne Hills-High S	Office 229	2	4L4' T8 32w/EL-8'	3	0.3	2L4' T8 28w/ELEE HI/NEW-8'	3	0.2	2,840	OCC SENSOR CEILING	1	164
IN	2663	Wayne Hills-High S	Classroom 228	2	4L4' T8 32w/EL-8'	5	0.6	2L4' T8 28w/ELEE HI/NEW-8'	5	0.3	1,988	ALREADY EXISTS		
IN	2664	Wayne Hills-High S	Classroom 228	2	4L4' T8 32w/EL-8'	7	0.8	2L4' T8 28w/ELEE HI/NEW-8'	7	0.4	1,988	ALREADY EXISTS		
IN	2665	Wayne Hills-High S	Classroom 228	2	2L4' T8 28w/ELEE	2	0.1	1L4' T8 28w/ELEE HI/NEW	2	0.1	1,988	ALREADY EXISTS		
IN	2666	Wayne Hills-High S	Hall 228	2	3L2' T8 17w/EL	13	0.6	3L2' T8 15w/ELEE LO	13	0.5	2,548	ALREADY EXISTS		
IN	2667	Wayne Hills-High S	Hall Display Case	2	2L4' T12 EE/EEMAG	1	0.1	1L4' T8 28w/ELEE/STRIP KIT	1	0.0	3,640	TIMER WALLSWITCH 1GANG	1	26
IN	2668	Wayne Hills-High S	Stair West 1	s	2L4' T8 32w/EL	4	0.2	2L4' T8 28w/ELEE LO/NEW	4	0.2	3,640	NO RETRO		
IN	2669	Wayne Hills-High S	Classroom 114	1	4L4' T8 32w/EL-8'	7	0.8	2L4' T8 28w/ELEE HI/NEW-8'	7	0.4	2,840	INCLUDED ABOVE		382
IN	2670	Wayne Hills-High S	Classroom 114	1	4L4' T8 32w/EL-8'	8	0.9	2L4' T8 28w/ELEE HI/NEW-8'	8	0.5	2,840	OCC SENSOR CEILING	1	436
IN	2671	Wayne Hills-High S	Storage 114	1	2L4' T8 32w/EL	3	0.2	1L4' T8 28w/ELEE HI/NEW	3	0.1	500	OCC SENSOR WALLSWITCH	1	15
IN	2672	Wayne Hills-High S	Classroom Studio	1	2L4' T8 32w/EL	3	0.2	1L4' T8 28w/ELEE HI/NEW	3	0.1	2,840	OCC SENSOR CEILING	1	84
IN	2673	Wayne Hills-High S	Classroom Studio	1	3L4' T8 32w/EL	2	0.2	2L4' T8 28w/ELEE/RFL	2	0.1	2,840	INCLUDED ABOVE		82
IN	2674	Wayne Hills-High S	Office 112	1	4L4' T8 32w/EL-8'	2	0.2	2L4' T8 28w/ELEE HI/NEW-8'	2	0.1	2,840	OCC SENSOR WALLSWITCH	1	109
IN	2675	Wayne Hills-High S	Classroom 115	1	4L4' T8 32w/EL-8'	9	1.0	2L4' T8 28w/ELEE HI/NEW-8'	9	0.6	2,840	OCC SENSOR CORNER MT.	1	491
IN	2676	Wayne Hills-High S	Classroom 115	1	2L4' T8 28w/ELEE	1	0.0	1L4' T8 28w/ELEE HI/NEW	1	0.0	2,840	INCLUDED ABOVE		28
IN	2677	Wayne Hills-High S	Closet 115	1	2L4' T8 28w/ELEE	2	0.1	1L4' T8 28w/ELEE HI/NEW	2	0.1	500	OCC SENSOR WALLSWITCH	1	10
IN	2678	Wayne Hills-High S	Storage Camera	1	2L4' T8 28w/ELEE	2	0.1	1L4' T8 28w/ELEE HI/NEW	2	0.1	500	OCC SENSOR WALLSWITCH	1	10
IN	2679	Wayne Hills-High S	Classroom Workroom	1	4L4' T8 32w/EL-8'	1	0.1	2L4' T8 28w/ELEE HI/NEW-8'	1	0.1	2,840	OCC SENSOR WALLSWITCH	1	55
IN	2680	Wayne Hills-High S	Classroom Workroom	1	3L4' T8 32w/EL	1	0.1	2L4' T8 28w/ELEE/RFL	1	0.0	2,840	OCC SENSOR WALLSWITCH	1	41

In or Out	Line	Building Name	Location	Fl	Pre Fixture Description	Pre Qty	Pre kW	Post Fixture Description	Post Qty	Post kW	Annual Hours	*Control Description*	*Control Qty*	Control kWH Saved
IN	2681	Wayne Hills-High S	Classroom 116	1	3L4' T8 32w/EL	18	1.6	2L4' T8 28w/ELEE/RFL	18	0.9	1,988	ALREADY EXISTS		
IN	2682	Wayne Hills-High S	Classroom 116	1	3L4' T8 32w/EL	5	0.4	2L4' T8 28w/ELEE/RFL	5	0.2	1,988	ALREADY EXISTS		
IN	2683	Wayne Hills-High S	Storage 116	1	2L4' T8 28w/ELEE	1	0.0	1L4' T8 28w/ELEE HI/NEW	1	0.0	500	OCC SENSOR WALLSWITCH	1	5
IN	2684	Wayne Hills-High S	Hall Stair West 1 To Stair South	1	3L2' T8 17w/EL	12	0.6	3L2' T8 15w/ELEE LO	12	0.5	3,640	NO RETRO		
IN	2685	Wayne Hills-High S	Classroom 117 Auto Shop	1	4L4' T8 32w/EL-8'	18	2.0	2L4' T8 28w/ELEE HI/NEW-8'	18	1.2	2,840	NO RETRO		
IN	2686	Wayne Hills-High S	Classroom 117 Auto Shop	1	2L4' T8 28w/ELEE	2	0.1	1L4' T8 28w/ELEE HI/NEW	2	0.1	2,840	NO RETRO		
IN	2687	Wayne Hills-High S	Storage 117 Auto Shop	1	2L4' T8 28w/ELEE	2	0.1	1L4' T8 28w/ELEE HI/NEW	2	0.1	500	OCC SENSOR WALLSWITCH	1	10
IN	2688	Wayne Hills-High S	Storage Parts	1	4L4' T8 32w/EL-8'	2	0.2	2L4' T8 28w/ELEE HI/NEW-8'	2	0.1	2,440	OCC SENSOR WALLSWITCH	1	94
IN	2689	Wayne Hills-High S	Storage Band	1	60W INCANDESCENT	4	0.2	2L4' T8 28w/ELEE LO/NEW	4	0.2	500	OCC SENSOR WALLSWITCH	1	25
IN	2690	Wayne Hills-High S	Classroom 118	1	4L4' T8 32w/EL-8'	3	0.3	2L4' T8 28w/ELEE HI/NEW-8'	3	0.2	2,840	INCLUDED ABOVE		164
IN	2691	Wayne Hills-High S	Classroom 118	1	2L4' T8 28w/ELEE	1	0.0	1L4' T8 28w/ELEE HI/NEW	1	0.0	2,840	INCLUDED ABOVE		28
IN	2692	Wayne Hills-High S	Classroom 118	1	4L4' T8 32w/EL-8'	9	1.0	2L4' T8 28w/ELEE HI/NEW-8'	9	0.6	2,840	OCC SENSOR CORNER MT.	1	491
IN	2693	Wayne Hills-High S	Classroom 118	1	2L4' T8 32w/EL	3	0.2	1L4' T8 28w/ELEE HI/NEW	3	0.1	2,840	INCLUDED ABOVE		84
IN	2694	Wayne Hills-High S	Office 118	1	4L4' T12 EE/EEMAG	1	0.1	4L4' T8 28w/ELEE LO	1	0.1	2,840	OCC SENSOR WALLSWITCH	1	71
IN	2695	Wayne Hills-High S	Hall Practice Rooms	1	60W INCANDESCENT	3	0.2	11W COMPACT SI/29708/CF11I	3	0.0	3,640	OCC SENSOR CORNER MT.	1	36
IN	2696	Wayne Hills-High S	Office Practice 1	1	2L4' T8 28w/ELEE	1	0.0	1L4' T8 28w/ELEE HI/NEW	1	0.0	2,840	OCC SENSOR WALLSWITCH	1	28
IN	2697	Wayne Hills-High S	Office Practice 2	1	2L4' T8 28w/ELEE	1	0.0	1L4' T8 28w/ELEE HI/NEW	1	0.0	2,840	OCC SENSOR WALLSWITCH	1	28
IN	2698	Wayne Hills-High S	Office Practice 3	1	2L4' T8 28w/ELEE	1	0.0	1L4' T8 28w/ELEE HI/NEW	1	0.0	2,840	OCC SENSOR WALLSWITCH	1	28
IN	2699	Wayne Hills-High S	Office 110 Ao	1	3L4' T8 32w/EL	2	0.2	3L4' T8 28w/ELEE LO	2	0.1	2,840	OCC SENSOR CEILING	1	107
IN	2700	Wayne Hills-High S	Classroom 119	1	4L4' T8 32w/EL-8'	12	1.3	2L4' T8 28w/ELEE HI/NEW-8'	12	0.8	2,840	OCC SENSOR CORNER MT.	1	654
IN	2701	Wayne Hills-High S	Classroom 119	1	4L4' T8 32w/EL-8'	4	0.4	2L4' T8 28w/ELEE HI/NEW-8'	4	0.3	2,840	INCLUDED ABOVE		218
IN	2702	Wayne Hills-High S	Storage 119	1	4L4' T8 32w/EL	1	0.1	4L4' T8 28w/ELEE LO	1	0.1	500	NO RETRO		
IN	2703	Wayne Hills-High S	Office Custodian	1	4L4' T8 32w/EL-8'	2	0.2	4L4' T8 28w/ELEE LO-8'	2	0.2	2,840	OCC SENSOR CORNER MT.	1	141
IN	2704	Wayne Hills-High S	Office Custodian	1	2L4' T8 28w/ELEE	2	0.1	1L4' T8 28w/ELEE HI/NEW	2	0.1	2,840	INCLUDED ABOVE		56
IN	2705	Wayne Hills-High S	Storage Custodian	1	2L4' T8 32w/EL	4	0.2	1L4' T8 28w/ELEE HI/NEW	4	0.1	500	TIMER WALLSWITCH 1GANG	1	20
IN	2706	Wayne Hills-High S	Hall 119 To 117	1	3L2' T8 17w/EL	9	0.4	3L2' T8 15w/ELEE LO	9	0.4	3,640	NO RETRO		
IN	2707	Wayne Hills-High S	Mechanical Elevator	1	2L4' T8 28w/ELEE	2	0.1	1L4' T8 28w/ELEE HI/NEW	2	0.1	500	OCC SENSOR WALLSWITCH	1	10
IN	2708	Wayne Hills-High S	Hall 119 To 111	1	3L2' T8 17w/EL	11	0.5	3L2' T8 15w/ELEE LO	11	0.4	3,640	NO RETRO		
IN	2709	Wayne Hills-High S	Hall Display Case	1	1L4' T12 EE/EEMAG	1	0.0	1L4' T8 28w/ELEE LO/STRIP KI	1	0.0	3,640	NO RETRO		
IN	2710	Wayne Hills-High S	Hall Display Case	1	1L2' T8 17w/EL	1	0.0	1L2' T8 15w/ELEE/STRIP KIT	1	0.0	3,640	NO RETRO		
IN	2711	Wayne Hills-High S	Hall Display Case	1	1L2' T12 STD/STD	2	0.1	1L2' T8 15w/ELEE/STRIP KIT	2	0.0	3,640	NO RETRO		
IN	2712	Wayne Hills-High S	Office Tickets	1	2x60W INCANDESCENTS	1	0.1	2L2' T8 15w/ELEE LO/NEW	1	0.0	2,840	OCC SENSOR WALLSWITCH	1	20
IN	2713	Wayne Hills-High S	Classroom 119	1	4L4' T8 32w/EL-8'	9	1.0	2L4' T8 28w/ELEE HI/NEW-8'	9	0.6	2,840	OCC SENSOR CEILING	1	491
IN	2714	Wayne Hills-High S	Classroom 119	1	150W INCANDESCENT	4	0.6	REMOVE FIXTURE	4		2,840	NO RETRO		
IN	2715	Wayne Hills-High S	Storage 119	1	2x60W INCANDESCENTS	1	0.1	2L2' T8 15w/ELEE LO/NEW	1	0.0	500	TIMER WALLSWITCH 1GANG	1	4
IN	2716	Wayne Hills-High S	Storage Kiln	1	3L4' T8 32w/EL	5	0.4	2L4' T8 28w/ELEE HI/NEW	5	0.3	500	OCC SENSOR WALLSWITCH	2	48
IN	2717	Wayne Hills-High S	Office 109 Ao	1	3L4' T8 32w/EL	4	0.4	2L4' T8 28w/ELEE HI/NEW	4	0.3	2,840	OCC SENSOR WALLSWITCH	2	218
IN	2718	Wayne Hills-High S	Storage Files	1	150W INCANDESCENT	4	0.6	2L2' T8 15w/ELEE LO/NEW	4	0.1	500	TIMER WALLSWITCH 1GANG	1	14
IN	2719	Wayne Hills-High S	Classroom 111	1	4L4' T8 32w/EL-8'	3	0.3	2L4' T8 28w/ELEE HI/NEW-8'	3	0.2	1,988	ALREADY EXISTS		
IN	2720	Wayne Hills-High S	Classroom 111	1	4L4' T8 32w/EL-8'	6	0.7	2L4' T8 28w/ELEE HI/NEW-8'	6	0.4	1,988	ALREADY EXISTS		

In or Out	Line	Building Name	Location	Fl	Pre Fixture Description	Pre Qty	Pre kW	Post Fixture Description	Post Qty	Post kW	Annual Hours	*Control Description*	*Control Qty*	Control kWH Saved
IN	2721	Wayne Hills-High S	Classroom 111	1	2L4' T8 28w/ELEE	2	0.1	1L4' T8 28w/ELEE HI/NEW	2	0.1	1,988	ALREADY EXISTS		
IN	2722	Wayne Hills-High S	Classroom 113	1	4L4' T8 32w/EL-8'	7	0.8	2L4' T8 28w/ELEE HI/NEW-8'	7	0.4	2,840	INCLUDED ABOVE		382
IN	2723	Wayne Hills-High S	Classroom 113	1	4L4' T8 32w/EL-8'	14	1.6	2L4' T8 28w/ELEE HI/NEW-8'	14	0.9	2,840	OCC SENSOR CORNER MT.	1	763
IN	2724	Wayne Hills-High S	Storage 113	1	2L4' T12 EE/EEMAG	2	0.1	2L4' T8 28w/ELEE LO	2	0.1	500	TIMER WALLSWITCH 1GANG	1	13
IN	2725	Wayne Hills-High S	Storage Wood	1	2L4' T8 28w/ELEE	2	0.1	1L4' T8 28w/ELEE HI/NEW	2	0.1	500	OCC SENSOR WALLSWITCH	1	10
IN	2726	Wayne Hills-High S	Storage Tools	1	2L4' T8 28w/ELEE	1	0.0	1L4' T8 28w/ELEE HI/NEW	1	0.0	500	OCC SENSOR WALLSWITCH	1	5
IN	2727	Wayne Hills-High S	Bath Women	1	2L4' T8 U/EL	2	0.1	2L2' T8 15w/ELEE HI/RFL	2	0.1	3,640	OCC SENSOR CEIL DT 1GAN	1	72
IN	2728	Wayne Hills-High S	Bath Women	1	2L4' T8 32w/EL	1	0.1	2L4' T8 28w/ELEE LO/NEW	1	0.0	3,640	INCLUDED ABOVE		46
IN	2729	Wayne Hills-High S	Bath Men	1	3L2' T8 17w/EL	6	0.3	3L2' T8 15w/ELEE LO	6	0.2	3,640	OCC SENSOR CEIL DT 1GAN	1	256
IN	2730	Wayne Hills-High S	Bath Men	1	2L4' T8 32w/EL	1	0.1	2L4' T8 28w/ELEE LO/NEW	1	0.0	3,640	INCLUDED ABOVE		46
IN	2731	Wayne Hills-High S	Classroom Dressing Room	1	3L4' T8 32w/EL	4	0.4	2L4' T8 28w/ELEE/RFL	4	0.2	2,840	OCC SENSOR CEILING	1	164
IN	2732	Wayne Hills-High S	Bath Dressing Room	1	2x60W INCANDESCENTS	1	0.1	2L2' T8 15w/ELEE LO/NEW	1	0.0	3,640	TIMER WALLSWITCH 1GANG	1	26
IN	2733	Wayne Hills-High S	Stair 114 To 109	s	3L2' T8 17w/EL	11	0.5	3L2' T8 15w/ELEE LO	11	0.4	3,640	NO RETRO		
IN	2734	Wayne Hills-High S	Stair Display Case	s	2L4' T8 28w/ELEE	1	0.0	1L4' T8 28w/ELEE/STRIP KIT	1	0.0	3,640	NO RETRO		
IN	2735	Wayne Hills-High S	Hall To Aud Side Entry	1	2L4' T8 28w/ELEE	2	0.1	2L4' T8 28w/ELEE LO	2	0.1	3,640	OCC SENSOR CORNER MT.	1	92
IN	2736	Wayne Hills-High S	Storage Dressing Room	1	100W INCANDESCENT	1	0.1	23W COMPACT SI/29712/CF23I	1	0.0	2,440	OCC SENSOR WALLSWITCH	1	17
IN	2737	Wayne Hills-High S	Auditorium Seating Area	1	100W INCANDESCENT	16	1.6	21 WATT LED SI/LED21Par38/D	16	0.3	3,240	NO RETRO		
IN	2738	Wayne Hills-High S	Auditorium Seating Area	1	150W INCANDESCENT	88	13.2	21 WATT LED SI/LED21Par38/D	88	1.8	3,240	NO RETRO		
IN	2739	Wayne Hills-High S	Auditorium Seating Area	1	25W INCANDESCENT	4	0.1	3 WATT LED/KIT	4	0.0	3,240	NO RETRO		
IN	2740	Wayne Hills-High S	Stage	1	150W INCANDESCENT	14	2.1	2L4' T8 28w/ELEE/NEW	14	0.7	2,920	NO RETRO		
IN	2741	Wayne Hills-High S	Storage Stage	1	150W INCANDESCENT	3	0.5	2L2' T8 15w/ELEE LO/NEW	3	0.1	2,440	NO RETRO		
IN	2742	Wayne Hills-High S	Hall On Left Of Stage	1	100W INCANDESCENT	3	0.3	21 WATT LED SI/LED21Par38/D	3	0.1	3,640	OCC SENSOR CORNER MT.	1	69
IN	2743	Wayne Hills-High S	Bath Men	1	2L2' F40 BIAX/EL	1	0.1	2L2' F40BIAX/EL28W	1	0.1	3,640	OCC SENSOR CEIL DT 1GAN	1	69
IN	2744	Wayne Hills-High S	Bath Men	1	2L4' T8 28w/ELEE	1	0.0	2L4' T8 28w/ELEE LO	1	0.0	3,640	INCLUDED ABOVE		46
IN	2745	Wayne Hills-High S	Bath Men	1	2L2' T8 17w/EL	1	0.0	2L2' T8 15w/ELEE LO/NEW	1	0.0	3,640	INCLUDED ABOVE		26
IN	2746	Wayne Hills-High S	Bath Women	1	2L2' F40 BIAX/EL	1	0.1	2L2' F40BIAX/EL28W	1	0.1	3,640	OCC SENSOR CEIL DT 1GAN	1	69
IN	2747	Wayne Hills-High S	Bath Women	1	2L4' T8 28w/ELEE	1	0.0	2L4' T8 28w/ELEE LO	1	0.0	3,640	INCLUDED ABOVE		46
IN	2748	Wayne Hills-High S	Bath Women	1	2L2' T8 17w/EL	1	0.0	2L2' T8 15w/ELEE LO/NEW	1	0.0	3,640	INCLUDED ABOVE		26
IN	2749	Wayne Hills-High S	Hall Receiving	1	3L2' T8 17w/EL	4	0.2	3L2' T8 15w/ELEE LO	4	0.2	3,640	NO RETRO		
IN	2750	Wayne Hills-High S	Storage 121 Sa	1	2L4' T8 28w/ELEE	1	0.0	2L4' T8 28w/ELEE LO	1	0.0	500	OCC SENSOR WALLSWITCH	1	6
IN	2751	Wayne Hills-High S	Storage 121 Sb	1	2x60W INCANDESCENTS	1	0.1	2L2' T8 15w/ELEE LO/NEW	1	0.0	500	OCC SENSOR WALLSWITCH	1	4
IN	2752	Wayne Hills-High S	Mechanical Boiler	1	4L4' T8 32w/EL-8'	5	0.6	4L4' T8 28w/ELEE LO-8'	5	0.4	500	NO RETRO		
IN	2753	Wayne Hills-High S	Mechanical Boiler	1	2L4' T8 32w/EL	3	0.2	2L4' T8 28w/ELEE LO	3	0.1	500	NO RETRO		
IN	2754	Wayne Hills-High S	Mechanical Boiler	1	4L4' T8 32w/EL-8'	3	0.3	2L4' T8 28w/ELEE HI/NEW-8'	3	0.2	500	NO RETRO		
IN	2755	Wayne Hills-High S	Mechanical Boiler	1	2L4' T8 32w/EL	1	0.1	1L4' T8 28w/ELEE HI/NEW	1	0.0	500	NO RETRO		
IN	2756	Wayne Hills-High S	Hall By Kitchen	1	3L2' T8 17w/EL	5	0.2	3L2' T8 15w/ELEE LO	5	0.2	2,548	ALREADY EXISTS		
IN	2757	Wayne Hills-High S	Kitchen 120 Prep Area	1	4L4' T8 32w/EL-8'	17	1.9	2L4' T8 28w/ELEE HI/NEW-8'	17	1.1	2,840	NO RETRO		
IN	2758	Wayne Hills-High S	Kitchen 120 Prep Area	1	2L4' T8 28w/ELEE	2	0.1	2L4' T8 28w/ELEE LO/NEW	2	0.1	2,840	NO RETRO		
IN	2759	Wayne Hills-High S	Kitchen Grease Hood	1	2L2' T12 STD/STD	7	0.4	2L2' T8 15w/ELEE LO	7	0.2	2,840	NO RETRO		
IN	2760	Wayne Hills-High S	Storage Dry Goods	1	2L4' T8 32w/EL	4	0.2	1L4' T8 28w/ELEE HI/NEW	4	0.1	500	NO RETRO		

In or Out	Line	Building Name	Location	Fl	Pre Fixture Description	Pre Qty	Pre kW	Post Fixture Description	Post Qty	Post kW	Annual Hours	*Control Description*	*Control Qty*	Control kWH Saved
IN	2761	Wayne Hills-High S	Storage Pans	1	2L4' T8 32w/EL	4	0.2	1L4' T8 28w/ELEE HI/NEW	4	0.1	500	NO RETRO		
IN	2762	Wayne Hills-High S	Storage Can	1	2L4' T8 32w/EL	4	0.2	1L4' T8 28w/ELEE HI/NEW	4	0.1	500	NO RETRO		
IN	2763	Wayne Hills-High S	Cafeteria Seating Area	1	6L4' T8 32w/EL	36	6.5	6L4' T8 28w/ELEE LO	36	4.5	3,440	NO RETRO		
IN	2764	Wayne Hills-High S	Cafeteria Seating Area	1	100W INCANDESCENT	10	1.0	21 WATT LED SI/LED21Par38/D	10	0.2	3,440	NO RETRO		
IN	2765	Wayne Hills-High S	Cafeteria Seating Area	1	1L4' T8 32w/EL	40	1.2	1L4' T8 28w/ELEE LO	40	0.9	3,440	NO RETRO		
IN	2766	Wayne Hills-High S	Lounge Staff	1	8L4' T8 32w/EL	3	0.7	8L4' T8 28w/ELEE LO	3	0.5	2,520	TIMER WALLSWITCH 1GANG	1	376
IN	2767	Wayne Hills-High S	Hall By Cafeteria	1	2L4' T8 32w/EL-8'	20	1.2	2L4' T8 28w/ELEE LO/STRIP KIT	20	0.8	3,640	NO RETRO		
IN	2768	Wayne Hills-High S	Lobby Entry	1	3L2' T8 17w/EL	8	0.4	3L2' T8 15w/ELEE LO	8	0.3	3,640	NO RETRO		
IN	2769	Wayne Hills-High S	Lobby Entry	1	3L2' T8 17w/EL	1	0.0	3L2' T8 15w/ELEE LO	1	0.0	3,640	NO RETRO		
IN	2770	Wayne Hills-High S	Lobby Entry	1	2L2' F40 BIAX/EL	6	0.4	2L2' F40BIAX/EL28W	6	0.4	3,640	NO RETRO		
IN	2771	Wayne Hills-High S	Hall Commons To 165	1	3L2' T8 17w/EL	10	0.5	3L2' T8 15w/ELEE LO	10	0.4	2,548	ALREADY EXISTS		
IN	2772	Wayne Hills-High S	Hall Commons To 165	1	2L4' T8 32w/EL	9	0.5	2L4' T8 28w/ELEE LO	9	0.4	2,548	ALREADY EXISTS		
IN	2773	Wayne Hills-High S	Hall Commons To 165	1	4L4' T8 32w/EL	1	0.1	4L4' T8 28w/ELEE LO	1	0.1	2,548	ALREADY EXISTS		
IN	2774	Wayne Hills-High S	Storage Paper	1	100W INCANDESCENT	3	0.3	23W COMPACT SI/29712/CF23I	3	0.1	500	OCC SENSOR WALLSWITCH	1	10
IN	2775	Wayne Hills-High S	Storage Shelves	1	100W INCANDESCENT	2	0.2	23W COMPACT SI/29712/CF23I	2	0.0	500	TIMER WALLSWITCH 1GANG	1	7
IN	2776	Wayne Hills-High S	Closet Clean	1	2L4' T8 28w/ELEE	1	0.0	1L4' T8 28w/ELEE HI/NEW	1	0.0	500	OCC SENSOR WALLSWITCH	1	5
IN	2777	Wayne Hills-High S	Storage Tables	1	2x60W INCANDESCENTS	3	0.4	2L2' T8 15w/ELEE LO/NEW	3	0.1	500	OCC SENSOR WALLSWITCH	1	11
IN	2778	Wayne Hills-High S	Storage Generator Access Outsi	1	2L4' T8 28w/ELEE	2	0.1	1L4' T8 28w/ELEE HI/NEW	2	0.1	500	NO RETRO		
IN	2779	Wayne Hills-High S	Classroom 164	1	3L4' T8 32w/EL	12	1.1	2L4' T8 28w/ELEE/RFL	12	0.6	1,988	ALREADY EXISTS		
IN	2780	Wayne Hills-High S	Classroom 165	1	3L4' T8 32w/EL	12	1.1	2L4' T8 28w/ELEE/RFL	12	0.6	1,988	ALREADY EXISTS		
IN	2781	Wayne Hills-High S	Classroom 162	1	3L4' T8 32w/EL	9	0.8	2L4' T8 28w/ELEE/RFL	9	0.4	1,988	ALREADY EXISTS		
IN	2782	Wayne Hills-High S	Classroom 163	1	3L4' T8 32w/EL	9	0.8	2L4' T8 28w/ELEE/RFL	9	0.4	1,988	ALREADY EXISTS		
IN	2783	Wayne Hills-High S	Classroom 161	1	9L4' T8 32w/EL-12'	6	1.6	9L4' T8 28w/ELEE LO-12'	6	1.1	1,988	ALREADY EXISTS		
IN	2784	Wayne Hills-High S	Classroom 161	1	6L4' T8 32w/EL-8'	3	0.5	6L4' T8 28w/ELEE LO-8'	3	0.4	1,988	ALREADY EXISTS		
IN	2785	Wayne Hills-High S	Storage 161	1	2L4' T8 32w/EL	3	0.2	1L4' T8 28w/ELEE HI/NEW	3	0.1	500	OCC SENSOR WALLSWITCH	1	15
IN	2786	Wayne Hills-High S	Classroom 160	1	3L4' T8 32w/EL	9	0.8	2L4' T8 28w/ELEE/RFL	9	0.4	1,988	ALREADY EXISTS		
IN	2787	Wayne Hills-High S	Hall 165 To 128	1	2L4' T8 32w/EL	24	1.4	2L4' T8 28w/ELEE LO	24	1.0	3,640	NO RETRO		
IN	2788	Wayne Hills-High S	Hall 165 To 128	1	4L4' T8 32w/EL	3	0.3	4L4' T8 28w/ELEE LO	3	0.2	3,640	NO RETRO		
IN	2789	Wayne Hills-High S	Storage 158 Sc	1	2L4' T8 32w/EL	3	0.2	1L4' T8 28w/ELEE HI/NEW	3	0.1	500	TIMER WALLSWITCH 1GANG	1	15
IN	2790	Wayne Hills-High S	Bath 158 Gt	1	2L4' T8 32w/EL	3	0.2	2L4' T8 28w/ELEE LO	3	0.1	3,640	OCC SENSOR CEIL DT 2GAN	1	138
IN	2791	Wayne Hills-High S	Bath 158 Gt	1	2L2' F40 BIAX/EL	1	0.1	2L2' F40BIAX/EL28W	1	0.1	3,640	INCLUDED ABOVE		69
IN	2792	Wayne Hills-High S	Closet Clean	1	2L4' T8 28w/ELEE	1	0.0	1L4' T8 28w/ELEE HI/NEW	1	0.0	500	OCC SENSOR WALLSWITCH	1	5
IN	2793	Wayne Hills-High S	Bath 158 Bt	1	2L4' T8 32w/EL	3	0.2	2L4' T8 28w/ELEE LO	3	0.1	3,640	OCC SENSOR CEIL DT 2GAN	1	138
IN	2794	Wayne Hills-High S	Bath 158 Bt	1	2L2' F40 BIAX/EL	1	0.1	2L2' F40BIAX/EL28W	1	0.1	3,640	INCLUDED ABOVE		69
IN	2795	Wayne Hills-High S	Office Open 159	1	3L4' T8 32w/EL	5	0.4	3L4' T8 28w/ELEE LO (1L&2L BA	5	0.3	2,408	ALREADY EXISTS		
IN	2796	Wayne Hills-High S	Bath 159	1	2L2' F40 BIAX/EL	1	0.1	2L2' F40BIAX/EL28W	1	0.1	2,548	ALREADY EXISTS		
IN	2797	Wayne Hills-High S	Office 159	1	4L4' T8 32w/EL	3	0.3	4L4' T8 28w/ELEE LO (2Lx2 BAL	3	0.3	1,988	ALREADY EXISTS		
IN	2798	Wayne Hills-High S	Classroom 156	1	3L4' T8 32w/EL	12	1.1	2L4' T8 28w/ELEE/RFL	12	0.6	1,988	ALREADY EXISTS		
IN	2799	Wayne Hills-High S	Classroom 157	1	3L4' T8 32w/EL	6	0.5	2L4' T8 28w/ELEE/RFL	6	0.3	1,988	ALREADY EXISTS		
IN	2800	Wayne Hills-High S	Classroom 155	1	3L4' T8 32w/EL	12	1.1	2L4' T8 28w/ELEE/RFL	12	0.6	1,988	ALREADY EXISTS		

In or Out	Line	Building Name	Location	Fl	Pre Fixture Description	Pre Qty	Pre kW	Post Fixture Description	Post Qty	Post kW	Annual Hours	*Control Description*	*Control Qty*	Control kWH Saved
IN	2801	Wayne Hills-High S	Classroom 154	1	3L4' T8 32w/EL	12	1.1	2L4' T8 28w/ELEE/RFL	12	0.6	1,988	ALREADY EXISTS		
IN	2802	Wayne Hills-High S	Classroom 128 Training	1	4L4' T8 32w/EL-8'	6	0.7	2L4' T8 28w/ELEE HI/NEW-8'	6	0.4	1,988	ALREADY EXISTS		
IN	2803	Wayne Hills-High S	Classroom 128 Training	1	2L4' T8 32w/EL	3	0.2	1L4' T8 28w/ELEE HI/NEW	3	0.1	1,988	ALREADY EXISTS		
IN	2804	Wayne Hills-High S	Classroom 127	1	4L4' T8 32w/EL-8'	12	1.3	2L4' T8 28w/ELEE HI/NEW-8'	12	0.8	1,988	ALREADY EXISTS		
IN	2805	Wayne Hills-High S	Classroom 127	1	2L4' T8 32w/EL	4	0.2	1L4' T8 28w/ELEE HI/NEW	4	0.1	1,988	ALREADY EXISTS		
IN	2806	Wayne Hills-High S	Office 126	1	4L4' T8 32w/EL-8'	4	0.4	2L4' T8 28w/ELEE HI/NEW-8'	4	0.3	2,840	OCC SENSOR CORNER MT.	1	218
IN	2807	Wayne Hills-High S	Classroom 125	1	3L4' T8 32w/EL	12	1.1	2L4' T8 28w/ELEE/RFL	12	0.6	1,988	ALREADY EXISTS		
IN	2808	Wayne Hills-High S	Hall 128 To 122	1	3L2' T8 17w/EL	12	0.6	3L2' T8 15w/ELEE LO	12	0.5	3,640	NO RETRO		
IN	2809	Wayne Hills-High S	Classroom 124	1	4L4' T8 32w/EL-8'	9	1.0	2L4' T8 28w/ELEE HI/NEW-8'	9	0.6	2,840	OCC SENSOR CORNER MT.	1	491
IN	2810	Wayne Hills-High S	Classroom 122	1	4L4' T8 32w/EL-8'	6	0.7	2L4' T8 28w/ELEE HI/NEW-8'	6	0.4	1,988	ALREADY EXISTS		
IN	2811	Wayne Hills-High S	Classroom 122	1	2L4' T8 32w/EL	3	0.2	1L4' T8 28w/ELEE HI/NEW	3	0.1	1,988	ALREADY EXISTS		
IN	2812	Wayne Hills-High S	Classroom 122	1	4L4' T8 32w/EL-8'	9	1.0	2L4' T8 28w/ELEE HI/NEW-8'	9	0.6	1,988	ALREADY EXISTS		
IN	2813	Wayne Hills-High S	Gym Main	1	400W METAL HALIDE	36	16.4	222 WATT LED/NEW	36	8.0	3,440	OCC. SENSOR ON HI BAY FI	36	8,248
IN	2814	Wayne Hills-High S	Gym Main	1	400W METAL HALIDE	12	5.5	222 WATT LED/NEW	12	2.7	3,440	OCC. SENSOR ON HI BAY FI	12	2,749
IN	2815	Wayne Hills-High S	Storage Mats	1	3x13W COMPACT HARDV	2	0.1	NO RETRO		0.1	500	OCC SENSOR WALLSWITCH	1	14
IN	2816	Wayne Hills-High S	Storage Balls	1	2L4' T8 28w/ELEE	2	0.1	1L4' T8 28w/ELEE HI/NEW	2	0.1	500	OCC SENSOR WALLSWITCH	1	10
IN	2817	Wayne Hills-High S	Closet Clean	1	23W COMPACT HARDWI	1	0.0	NO RETRO		0.0	500	OCC SENSOR WALLSWITCH	1	4
IN	2818	Wayne Hills-High S	Storage Balance Beam	1	2L4' T8 28w/ELEE	1	0.0	1L4' T8 28w/ELEE HI/NEW	1	0.0	500	TIMER WALLSWITCH 1GANG	1	5
IN	2819	Wayne Hills-High S	Storage Balance Beam	1	2L4' T8 32w/EL	1	0.1	1L4' T8 28w/ELEE HI/NEW	1	0.0	500	INCLUDED ABOVE		5
IN	2820	Wayne Hills-High S	Storage Equipment	1	2L4' T8 32w/EL	4	0.2	1L4' T8 28w/ELEE HI/NEW	4	0.1	500	OCC SENSOR WALLSWITCH	1	20
IN	2821	Wayne Hills-High S	Storage Basket Balls	1	2L4' T8 32w/EL	3	0.2	1L4' T8 28w/ELEE HI/NEW	3	0.1	500	OCC SENSOR WALLSWITCH	1	15
IN	2822	Wayne Hills-High S	Closet Clean	1	60W INCANDESCENT	1	0.1	23W COMPACT SI/29712/CF23I	1	0.0	500	OCC SENSOR WALLSWITCH	1	3
IN	2823	Wayne Hills-High S	Lobby Main Office To 100	1	6L4' T8 32w/EL	11	2.0	6L4' T8 28w/ELEE LO	11	1.4	3,640	NO RETRO		
IN	2824	Wayne Hills-High S	Lobby Main Office To 100	1	3L2' T8 17w/EL	9	0.4	3L2' T8 15w/ELEE LO	9	0.4	3,640	NO RETRO		
IN	2825	Wayne Hills-High S	Bath 108 Bt	1	2L4' T8 U/EL	6	0.4	2L2' T8 15w/ELEE HI/RFL	6	0.2	3,640	OCC SENSOR CEIL DT 1GAN	1	216
IN	2826	Wayne Hills-High S	Bath 108 Gt	1	2L4' T8 U/EL	6	0.4	2L2' T8 15w/ELEE HI/RFL	6	0.2	3,640	OCC SENSOR CEIL DT 1GAN	1	216
IN	2827	Wayne Hills-High S	Office Principal	1	4L4' T8 32w/EL-8'	4	0.4	2L4' T8 28w/ELEE HI/NEW-8'	4	0.3	2,840	NO RETRO		
IN	2828	Wayne Hills-High S	Office Principal	1	2L4' T8 28w/ELEE	2	0.1	1L4' T8 28w/ELEE HI/NEW	2	0.1	2,840	NO RETRO		
IN	2829	Wayne Hills-High S	Office Open Main	1	4L4' T8 32w/EL-8'	8	0.9	2L4' T8 28w/ELEE HI/NEW-8'	8	0.5	3,440	OCC SENSOR CORNER MT.	1	528
IN	2830	Wayne Hills-High S	Office Open Main	1	2L4' T8 32w/EL	4	0.2	1L4' T8 28w/ELEE HI/NEW	4	0.1	3,440	INCLUDED ABOVE		136
IN	2831	Wayne Hills-High S	Kitchen Coffee	1	3L4' T8 32w/EL	4	0.4	3L4' T8 28w/ELEE LO	4	0.3	2,840	OCC SENSOR WALLSWITCH	1	215
IN	2832	Wayne Hills-High S	Storage Vault	1	3L4' T8 32w/EL	1	0.1	3L4' T8 28w/ELEE LO	1	0.1	500	TIMER WALLSWITCH 1GANG	1	9
IN	2833	Wayne Hills-High S	Hall Main Office	1	2L4' T8 32w/EL	3	0.2	1L4' T8 28w/ELEE HI/NEW	3	0.1	3,640	OCC SENSOR CORNER MT.	1	108
IN	2834	Wayne Hills-High S	Conference Main Office	1	3L4' T8 32w/EL	6	0.5	3L4' T8 28w/ELEE LO	6	0.4	2,840	OCC SENSOR WALLSWITCH	1	322
IN	2835	Wayne Hills-High S	Office Vice Principal	1	3L4' T8 32w/EL	6	0.5	3L4' T8 28w/ELEE LO	6	0.4	2,840	OCC SENSOR WALLSWITCH	1	322
IN	2836	Wayne Hills-High S	Office Vice Principal	1	3L4' T8 32w/EL	6	0.5	3L4' T8 28w/ELEE LO	6	0.4	2,840	OCC SENSOR WALLSWITCH	1	322
IN	2837	Wayne Hills-High S	Office Open Guidance	1	4L4' T8 32w/EL-8'	5	0.6	2L4' T8 28w/ELEE HI/NEW-8'	5	0.3	3,440	OCC SENSOR CEILING	2	330
IN	2838	Wayne Hills-High S	Office Open Guidance	1	3L2' T8 17w/EL	1	0.0	3L2' T8 15w/ELEE LO	1	0.0	3,440	INCLUDED ABOVE		40
IN	2839	Wayne Hills-High S	Office 104C	1	3L4' T8 32w/EL	4	0.4	3L4' T8 28w/ELEE LO	4	0.3	2,840	OCC SENSOR CORNER MT.	1	215
IN	2840	Wayne Hills-High S	Office 104E	1	3L4' T8 32w/EL	2	0.2	3L4' T8 28w/ELEE LO	2	0.1	2,840	OCC SENSOR WALLSWITCH	1	107

In or Out	Line	Building Name	Location	Fl	Pre Fixture Description	Pre Qty	Pre kW	Post Fixture Description	Post Qty	Post kW	Annual Hours	*Control Description*	*Control Qty*	Control kWH Saved
IN	2841	Wayne Hills-High S	Office 104F	1	3L4' T8 32w/EL	2	0.2	3L4' T8 28w/ELEE LO	2	0.1	2,840	OCC SENSOR WALLSWITCH	1	107
IN	2842	Wayne Hills-High S	Office 104G	1	3L4' T8 32w/EL	4	0.4	3L4' T8 28w/ELEE LO	4	0.3	2,840	OCC SENSOR CORNER MT.	1	215
IN	2843	Wayne Hills-High S	Office 104H	1	3L4' T8 32w/EL	2	0.2	3L4' T8 28w/ELEE LO	2	0.1	2,840	OCC SENSOR WALLSWITCH	1	107
IN	2844	Wayne Hills-High S	Office Open Medical Exam	1	3L4' T8 32w/EL	4	0.4	3L4' T8 28w/ELEE LO	4	0.3	3,440	OCC SENSOR WALLSWITCH	2	260
IN	2845	Wayne Hills-High S	Office Open Nurse	1	6L4' T8 32w/EL-8'	1	0.2	4L4' T8 28w/ELEE HI/NEW-8'	1	0.1	3,440	OCC SENSOR CORNER MT.	1	130
IN	2846	Wayne Hills-High S	Office Open Nurse	1	3L4' T8 32w/EL	1	0.1	2L4' T8 28w/ELEE/NEW	1	0.0	3,440	INCLUDED ABOVE		50
IN	2847	Wayne Hills-High S	Office Open Nurse	1	6L4' T8 32w/EL-8'	2	0.4	4L4' T8 28w/ELEE HI/NEW-8'	2	0.3	3,440	INCLUDED ABOVE		260
IN	2848	Wayne Hills-High S	Office Open Nurse	1	3L4' T8 32w/EL	2	0.2	2L4' T8 28w/ELEE/NEW	2	0.1	3,440	INCLUDED ABOVE		99
IN	2849	Wayne Hills-High S	Office Open Nurse	1	2L4' T12 EE/EEMAG	1	0.1	2L4' T8 28w/ELEE LO/NEW	1	0.0	3,440	INCLUDED ABOVE		43
IN	2850	Wayne Hills-High S	Office Beds	1	3L2' T8 17w/EL	1	0.0	3L2' T8 15w/ELEE LO	1	0.0	2,840	TIMER WALLSWITCH 1GANG	1	33
IN	2851	Wayne Hills-High S	Office Beds	1	3L2' T8 17w/EL	1	0.0	3L2' T8 15w/ELEE LO	1	0.0	2,840	TIMER WALLSWITCH 1GANG	1	33
IN	2852	Wayne Hills-High S	Storage Air Handler	1	2L4' T8 28w/ELEE	1	0.0	1L4' T8 28w/ELEE HI/NEW	1	0.0	500	NO RETRO		
IN	2853	Wayne Hills-High S	Bath Nurse	1	2x60W INCANDESCENTS	1	0.1	2L2' T8 15w/ELEE LO/NEW	1	0.0	3,640	OCC SENSOR WALLSWITCH	1	26
IN	2854	Wayne Hills-High S	Storage 100	1	2x60W INCANDESCENTS	1	0.1	2L2' T8 15w/ELEE LO/NEW	1	0.0	500	OCC SENSOR WALLSWITCH	1	4
IN	2855	Wayne Hills-High S	Locker 101 Boys Team	1	4L4' T8 32w/EL-8'	5	0.6	2L4' T8 28w/ELEE HI/NEW-8'	5	0.3	3,640	NO RETRO		
IN	2856	Wayne Hills-High S	Locker 101 Boys Team	1	2L4' T8 28w/ELEE	1	0.0	1L4' T8 28w/ELEE HI/NEW	1	0.0	3,640	NO RETRO		
IN	2857	Wayne Hills-High S	Office Exam	1	3L4' T8 32w/EL	1	0.1	3L4' T8 28w/ELEE LO	1	0.1	2,840	NO RETRO		
IN	2858	Wayne Hills-High S	Bath Exam	1	2L4' T8 28w/ELEE	1	0.0	1L4' T8 28w/ELEE HI/NEW	1	0.0	3,640	OCC SENSOR WALLSWITCH	1	36
IN	2859	Wayne Hills-High S	Bath Exam	1	2L4' T8 32w/EL	1	0.1	2L4' T8 28w/ELEE LO/NEW	1	0.0	3,640	INCLUDED ABOVE		46
IN	2860	Wayne Hills-High S	Storage Exam	1	60W INCANDESCENT	2	0.1	2L2' T8 15w/ELEE LO/NEW	2	0.0	500	OCC SENSOR WALLSWITCH	1	7
IN	2861	Wayne Hills-High S	Storage Gatorade	1	60W INCANDESCENT	3	0.2	2L2' T8 15w/ELEE LO/NEW	3	0.1	500	OCC SENSOR WALLSWITCH	1	11
IN	2862	Wayne Hills-High S	Locker Boys	1	2L4' T8 32w/EL	22	1.3	1L4' T8 28w/ELEE HI/NEW	22	0.7	3,640	NO RETRO		
IN	2863	Wayne Hills-High S	Locker Shower	1	35W HI PRESSURE SODI	10	0.5	23W COMPACT SI/29712/CF23I	10	0.2	3,640	NO RETRO		
IN	2864	Wayne Hills-High S	Locker Toilet Area	1	2L4' T8 28w/ELEE	1	0.0	1L4' T8 28w/ELEE HI/NEW	1	0.0	3,640	OCC SENSOR WALLSWITCH	1	36
IN	2865	Wayne Hills-High S	Locker Toilet Area	1	2L4' T8 32w/EL	1	0.1	2L4' T8 28w/ELEE LO/NEW	1	0.0	3,640	INCLUDED ABOVE		46
IN	2866	Wayne Hills-High S	Office Coach	1	4L4' T12 EE/EEMAG-8'	3	0.4	2L4' T8 28w/ELEE HI/NEW-8'	3	0.2	2,840	OCC SENSOR WALLSWITCH	1	164
IN	2867	Wayne Hills-High S	Bath Coach	1	2L2' T12 STD/STD	1	0.1	2L2' T8 15w/ELEE LO/NEW	1	0.0	3,640	OCC SENSOR WALLSWITCH	1	26
IN	2868	Wayne Hills-High S	Bath Coach	1	13W COMPACT HARDWIF	1	0.0	NO RETRO		0.0	3,640	INCLUDED ABOVE		16
IN	2869	Wayne Hills-High S	Locker Girls	1	3L4' T8 32w/EL	2	0.2	3L4' T8 28w/ELEE LO	2	0.1	3,640	NO RETRO		
IN	2870	Wayne Hills-High S	Locker Girls	1	2L4' T8 32w/EL	21	1.3	1L4' T8 28w/ELEE HI/NEW	21	0.7	3,640	NO RETRO		
IN	2871	Wayne Hills-High S	Locker Toilet Area	1	2L4' T8 28w/ELEE	1	0.0	1L4' T8 28w/ELEE HI/NEW	1	0.0	3,640	OCC SENSOR WALLSWITCH	1	36
IN	2872	Wayne Hills-High S	Locker Toilet Area	1	2L4' T8 32w/EL	1	0.1	2L4' T8 28w/ELEE LO/NEW	1	0.0	3,640	INCLUDED ABOVE		46
IN	2873	Wayne Hills-High S	Locker Shower	1	35W HI PRESSURE SODI	10	0.5	23W COMPACT SI/29712/CF23I	10	0.2	3,640	NO RETRO		
IN	2874	Wayne Hills-High S	Office Coach	1	4L4' T8 32w/EL-8'	3	0.3	2L4' T8 28w/ELEE HI/NEW-8'	3	0.2	2,840	OCC SENSOR CEILING	1	164
IN	2875	Wayne Hills-High S	Bath Coach	1	2L4' T12 EE/EEMAG	1	0.1	1L4' T8 28w/ELEE HI/NEW	1	0.0	3,640	OCC SENSOR WALLSWITCH	1	36
IN	2876	Wayne Hills-High S	Bath Coach	1	2L2' T8 17w/EL	1	0.0	2L2' T8 15w/ELEE LO/NEW	1	0.0	3,640	INCLUDED ABOVE		26
IN	2877	Wayne Hills-High S	Hall By Courtyard	1	3L2' T8 17w/EL	3	0.1	3L2' T8 15w/ELEE LO	3	0.1	3,640	DAYLIGHT HARVESTING SYS	3	213
IN	2878	Wayne Hills-High S	Hall By Courtyard	1	13W COMPACT HARDWIF	2	0.0	NO RETRO		0.0	3,640	PHOTO SENSOR FOR ON/OF	1	33
IN	2879	Wayne Hills-High S	Office 153	1	3L4' T8 32w/EL	4	0.4	3L4' T8 28w/ELEE LO	4	0.3	2,840	OCC SENSOR CEILING	1	215
IN	2880	Wayne Hills-High S	Storage Balls	1	2L4' T12 EE/EEMAG	1	0.1	2L4' T8 28w/ELEE LO	1	0.0	500	NO RETRO		

In or Out	Line	Building Name	Location	Fl	Pre Fixture Description	Pre Qty	Pre kW	Post Fixture Description	Post Qty	Post kW	Annual Hours	*Control Description*	*Control Qty*	Control kWH Saved
IN	2881	Wayne Hills-High S	Office 152	1	3L4' T8 32w/EL	3	0.3	3L4' T8 28w/ELEE LO	3	0.2	2,840	OCC SENSOR CEILING	1	161
IN	2882	Wayne Hills-High S	Office 152	1	3L4' T8 32w/EL	1	0.1	3L4' T8 28w/ELEE LO	1	0.1	2,840	INCLUDED ABOVE		54
IN	2883	Wayne Hills-High S	Locker 150 Coach	1	3L2' T8 17w/EL	1	0.0	3L2' T8 15w/ELEE LO	1	0.0	3,640	OCC SENSOR CEILING	1	43
IN	2884	Wayne Hills-High S	Locker 150 Coach	1	3L4' T8 32w/EL	3	0.3	3L4' T8 28w/ELEE LO	3	0.2	3,640	INCLUDED ABOVE		206
IN	2885	Wayne Hills-High S	Bath 150 Coach	1	2L4' T8 32w/EL	2	0.1	1L4' T8 28w/ELEE HI/NEW	2	0.1	3,640	OCC SENSOR WALLSWITCH	1	72
IN	2886	Wayne Hills-High S	Bath 150 Coach	1	2L2' T12 STD/STD	1	0.1	2L2' T8 15w/ELEE LO/NEW	1	0.0	3,640	INCLUDED ABOVE		26
IN	2887	Wayne Hills-High S	Locker 149 Girls	1	3L2' T8 17w/EL	5	0.2	3L2' T8 15w/ELEE LO	5	0.2	3,640	NO RETRO		
IN	2888	Wayne Hills-High S	Storage Cheerleading	1	1L4' T8 32w/EL	1	0.0	1L4' T8 28w/ELEE HI/NEW	1	0.0	500	TIMER WALLSWITCH 1GANG	1	5
IN	2889	Wayne Hills-High S	Storage B	1	1L4' T8 32w/EL	1	0.0	1L4' T8 28w/ELEE HI/NEW	1	0.0	500	OCC SENSOR WALLSWITCH	1	5
IN	2890	Wayne Hills-High S	Storage C	1	1L4' T8 32w/EL	1	0.0	1L4' T8 28w/ELEE HI/NEW	1	0.0	500	OCC SENSOR WALLSWITCH	1	5
IN	2891	Wayne Hills-High S	Storage D	1	1L4' T8 32w/EL	1	0.0	1L4' T8 28w/ELEE HI/NEW	1	0.0	500	OCC SENSOR WALLSWITCH	1	5
IN	2892	Wayne Hills-High S	Locker Shower Area	1	2L4' T8 32w/EL	8	0.5	2L4' T8 28w/ELEE LO	8	0.3	3,640	NO RETRO		
IN	2893	Wayne Hills-High S	Locker 149 Girls	1	2L4' T8 32w/EL	20	1.2	2L4' T8 28w/ELEE LO	20	0.8	3,640	NO RETRO		
IN	2894	Wayne Hills-High S	Bath Girls	1	2L4' T8 28w/ELEE	2	0.1	1L4' T8 28w/ELEE HI/NEW	2	0.1	3,640	OCC SENSOR WALLSWITCH	1	72
IN	2895	Wayne Hills-High S	Storage E	1	60W INCANDESCENT	1	0.1	2L2' T8 15w/ELEE LO/NEW	1	0.0	500	OCC SENSOR WALLSWITCH	1	4
IN	2896	Wayne Hills-High S	Office Coach	1	3L4' T8 32w/EL	4	0.4	3L4' T8 28w/ELEE LO	4	0.3	2,840	OCC SENSOR CEILING	1	215
IN	2897	Wayne Hills-High S	Bath Coach	1	60W INCANDESCENT	1	0.1	11 WATT LED SI/LED10Par20/D	1	0.0	3,640	OCC SENSOR WALLSWITCH	1	12
IN	2898	Wayne Hills-High S	Bath Coach	1	2L2' T8 17w/EL	1	0.0	2L2' T8 15w/ELEE LO/NEW	1	0.0	3,640	INCLUDED ABOVE		26
IN	2899	Wayne Hills-High S	Hall By East 6	1	3L4' T8 32w/EL	3	0.3	3L4' T8 28w/ELEE LO	3	0.2	3,640	#N/A	#N/A	#N/A
IN	2900	Wayne Hills-High S	Gym Girls	1	400W METAL HALIDE	56	25.5	138 WATT LED/NEW	56	7.7	3,440	OCC. SENSOR ON HI BAY FI	6	7,975
IN	2901	Wayne Hills-High S	Storage Volley Balls	1	4L4' T8 32w/EL-8'	2	0.2	2L4' T8 28w/ELEE HI/NEW-8'	2	0.1	500	TIMER WALLSWITCH 1GANG	1	19
IN	2902	Wayne Hills-High S	Hall 145 Boys	1	3L2' T8 17w/EL	4	0.2	3L2' T8 15w/ELEE LO	4	0.2	3,640	OCC SENSOR CORNER MT.	1	170
IN	2903	Wayne Hills-High S	Storage Cooler	1	1L4' T8 32w/EL	1	0.0	1L4' T8 28w/ELEE HI/NEW	1	0.0	500	OCC SENSOR WALLSWITCH	1	5
IN	2904	Wayne Hills-High S	Storage Fencing	1	1L4' T8 32w/EL	1	0.0	1L4' T8 28w/ELEE HI/NEW	1	0.0	500	OCC SENSOR WALLSWITCH	1	5
IN	2905	Wayne Hills-High S	Storage Foot Pylons	1	1L4' T8 32w/EL	1	0.0	1L4' T8 28w/ELEE HI/NEW	1	0.0	500	OCC SENSOR WALLSWITCH	1	5
IN	2906	Wayne Hills-High S	Storage Uniforms	1	1L4' T8 32w/EL	1	0.0	1L4' T8 28w/ELEE HI/NEW	1	0.0	500	OCC SENSOR WALLSWITCH	1	5
IN	2907	Wayne Hills-High S	Locker 145 Boys	1	4L4' T8 32w/EL	16	1.8	2L4' T8 28w/ELEE HI/RFL	16	1.0	3,640	OCC SENSOR CEIL DT 1GAN	4	1,118
IN	2908	Wayne Hills-High S	Locker 145 Boys	1	2L4' T8 32w/EL	3	0.2	2L4' T8 28w/ELEE LO	3	0.1	3,640	INCLUDED ABOVE		138
IN	2909	Wayne Hills-High S	Locker 145 Boys	1	3L2' T8 17w/EL	2	0.1	3L2' T8 15w/ELEE LO	2	0.1	3,640	INCLUDED ABOVE		85
IN	2910	Wayne Hills-High S	Locker Shower Area	1	2L4' T8 32w/EL	8	0.5	2L4' T8 28w/ELEE LO	8	0.3	3,640	NO RETRO		
IN	2911	Wayne Hills-High S	Office Coach	1	4L4' T8 32w/EL	4	0.4	2L4' T8 28w/ELEE HI/RFL	4	0.3	2,840	OCC SENSOR WALLSWITCH	1	218
IN	2912	Wayne Hills-High S	Bath Coach	1	23W COMPACT HARDWIR	1	0.0	NO RETRO		0.0	3,640	OCC SENSOR WALLSWITCH	1	26
IN	2913	Wayne Hills-High S	Bath Coach	1	2L2' T8 17w/EL	1	0.0	2L2' T8 15w/ELEE LO/NEW	1	0.0	3,640	INCLUDED ABOVE		26
IN	2914	Wayne Hills-High S	Closet Clean	1	23W COMPACT HARDWIR	1	0.0	NO RETRO		0.0	500	OCC SENSOR WALLSWITCH	1	4
IN	2915	Wayne Hills-High S	Locker Toilet	1	4L4' T8 32w/EL	1	0.1	2L4' T8 28w/ELEE HI/NEW	1	0.1	3,640	OCC SENSOR WALLSWITCH	1	70
IN	2916	Wayne Hills-High S	Locker Hall	1	3L2' T8 17w/EL	2	0.1	3L2' T8 15w/ELEE LO	2	0.1	3,640	OCC SENSOR CEILING	1	85
IN	2917	Wayne Hills-High S	Hall By Stair East 8	1	4L4' T8 32w/EL	3	0.3	2L4' T8 28w/ELEE HI/RFL	3	0.2	3,640	#N/A	#N/A	#N/A
IN	2918	Wayne Hills-High S	Locker 147	1	4L4' T8 32w/EL-8'	2	0.2	4L4' T8 28w/ELEE LO-8'	2	0.2	3,640	NO RETRO		
IN	2919	Wayne Hills-High S	Locker 147	1	2L4' T8 32w/EL	6	0.4	2L4' T8 28w/ELEE LO	6	0.3	3,640	NO RETRO		
IN	2920	Wayne Hills-High S	Locker 147	1	2L4' T8 32w/EL	3	0.2	2L4' T8 28w/ELEE LO	3	0.1	3,640	NO RETRO		

In or Out	Line	Building Name	Location	Fl	Pre Fixture Description	Pre Qty	Pre kW	Post Fixture Description	Post Qty	Post kW	Annual Hours	*Control Description*	*Control Qty*	Control kWH Saved
IN	2921	Wayne Hills-High S	Office Coach	1	3L4' T8 32w/EL	4	0.4	3L4' T8 28w/ELEE LO	4	0.3	2,840	OCC SENSOR WALLSWITCH	1	215
IN	2922	Wayne Hills-High S	Bath Boys	1	4L4' T8 32w/EL-8'	2	0.2	2L4' T8 28w/ELEE HI/NEW-8'	2	0.1	3,640	OCC SENSOR WALLSWITCH	1	140
IN	2923	Wayne Hills-High S	Bath Boys	1	2L4' T8 28w/ELEE	1	0.0	1L4' T8 28w/ELEE HI/NEW	1	0.0	3,640	INCLUDED ABOVE		36
IN	2924	Wayne Hills-High S	Bath Girls	1	4L4' T8 32w/EL-8'	2	0.2	2L4' T8 28w/ELEE HI/NEW-8'	2	0.1	3,640	OCC SENSOR WALLSWITCH	1	140
IN	2925	Wayne Hills-High S	Bath Girls	1	2L4' T8 28w/ELEE	1	0.0	1L4' T8 28w/ELEE HI/NEW	1	0.0	3,640	INCLUDED ABOVE		36
IN	2926	Wayne Hills-High S	Classroom 144	1	2L4' T8 32w/EL	4	0.2	2L4' T8 28w/ELEE/RFL	4	0.2	1,988	ALREADY EXISTS		
IN	2927	Wayne Hills-High S	Classroom 144	1	3L4' T8 32w/EL	16	1.4	2L4' T8 28w/ELEE/RFL	16	0.8	1,988	ALREADY EXISTS		
IN	2928	Wayne Hills-High S	Classroom 142	1	3L4' T8 32w/EL	6	0.5	2L4' T8 28w/ELEE/RFL	6	0.3	2,840	OCC SENSOR CEILING	1	245
IN	2929	Wayne Hills-High S	Storage 142	1	3L4' T8 32w/EL	1	0.1	3L4' T8 28w/ELEE LO	1	0.1	500	OCC SENSOR WALLSWITCH	1	9
IN	2930	Wayne Hills-High S	Classroom 141	1	2L4' T8 32w/EL	4	0.2	2L4' T8 28w/ELEE/RFL	4	0.2	1,988	ALREADY EXISTS		
IN	2931	Wayne Hills-High S	Classroom 141	1	3L4' T8 32w/EL	13	1.1	2L4' T8 28w/ELEE/RFL	13	0.6	1,988	ALREADY EXISTS		
IN	2932	Wayne Hills-High S	Storage Tennis Balls	1	3L4' T8 32w/EL	1	0.1	3L4' T8 28w/ELEE LO	1	0.1	500	TIMER WALLSWITCH 1GANG	1	9
IN	2933	Wayne Hills-High S	Office 141	1	3L4' T8 32w/EL	2	0.2	3L4' T8 28w/ELEE LO	2	0.1	2,840	OCC SENSOR CEILING	1	107
IN	2934	Wayne Hills-High S	Storage 141 Books	1	3L4' T8 32w/EL	1	0.1	3L4' T8 28w/ELEE LO	1	0.1	500	TIMER WALLSWITCH 1GANG	1	9
IN	2935	Wayne Hills-High S	Storage 139	1	3L4' T8 32w/EL	6	0.5	3L4' T8 28w/ELEE LO	6	0.4	500	OCC SENSOR CEILING	1	57
IN	2936	Wayne Hills-High S	Classroom 137	1	3L4' T8 32w/EL	15	1.3	2L4' T8 28w/ELEE/RFL	15	0.7	2,840	OCC SENSOR CEILING	1	613
IN	2937	Wayne Hills-High S	Bath 137 T	1	2L4' T8 28w/ELEE	1	0.0	2L4' T8 28w/ELEE LO	1	0.0	3,640	OCC SENSOR WALLSWITCH	1	46
IN	2938	Wayne Hills-High S	Storage 137	1	3L4' T8 32w/EL	2	0.2	3L4' T8 28w/ELEE LO	2	0.1	500	TIMER WALLSWITCH 1GANG	1	19
IN	2939	Wayne Hills-High S	Storage Air Handler	1	4L4' T8 32w/EL-8'	1	0.1	4L4' T8 28w/ELEE LO-8'	1	0.1	500	OCC SENSOR WALLSWITCH	1	12
IN	2940	Wayne Hills-High S	Classroom 140	1	3L4' T8 32w/EL	20	1.8	2L4' T8 28w/ELEE/RFL	20	1.0	2,840	NO RETRO		
IN	2941	Wayne Hills-High S	Classroom 138	1	4L4' T8 32w/EL	6	0.7	2L4' T8 28w/ELEE/RFL	6	0.3	1,988	ALREADY EXISTS		
IN	2942	Wayne Hills-High S	Hall Guidance	1	3L2' T8 17w/EL	9	0.4	3L2' T8 15w/ELEE LO	9	0.4	3,640	OCC SENSOR CORNER MT.	1	383
IN	2943	Wayne Hills-High S	Office 136 Ao	1	4L4' T8 32w/EL	2	0.2	4L4' T8 28w/ELEE LO (2Lx2 BAL	2	0.2	1,988	ALREADY EXISTS		
IN	2944	Wayne Hills-High S	Hall 152 To 130	1	3L2' T8 17w/EL	45	2.1	3L2' T8 15w/ELEE LO	45	1.8	3,640	NO RETRO		
IN	2945	Wayne Hills-High S	Hall Display Case	1	2L4' T12 EE/EEMAG	8	0.6	1L4' T8 28w/ELEE HI/NEW	8	0.3	3,640	NO RETRO		
IN	2946	Wayne Hills-High S	Office 136 Bo	1	3L4' T8 32w/EL	4	0.4	3L4' T8 28w/ELEE LO (1L&2L BA	4	0.3	1,988	ALREADY EXISTS		
IN	2947	Wayne Hills-High S	Office Counselor	1	3L4' T8 32w/EL	6	0.5	3L4' T8 28w/ELEE LO	6	0.4	2,840	OCC SENSOR CEILING	1	322
IN	2948	Wayne Hills-High S	Office Mann	1	3L4' T8 32w/EL	4	0.4	3L4' T8 28w/ELEE LO	4	0.3	2,840	OCC SENSOR WALLSWITCH	1	215
IN	2949	Wayne Hills-High S	Office Chiller	1	3L4' T8 32w/EL	4	0.4	3L4' T8 28w/ELEE LO	4	0.3	2,840	OCC SENSOR CEILING	1	215
IN	2950	Wayne Hills-High S	Office Keogh	1	3L4' T8 32w/EL	4	0.4	3L4' T8 28w/ELEE LO	4	0.3	2,840	OCC SENSOR CEILING	1	215
IN	2951	Wayne Hills-High S	Office Savastano	1	3L4' T8 32w/EL	4	0.4	3L4' T8 28w/ELEE LO	4	0.3	2,840	OCC SENSOR CEILING	1	215
IN	2952	Wayne Hills-High S	Office Gorkowski	1	3L4' T8 32w/EL	6	0.5	3L4' T8 28w/ELEE LO	6	0.4	2,840	OCC SENSOR CEILING	1	322
IN	2953	Wayne Hills-High S	Kitchen	1	3L4' T8 32w/EL	4	0.4	3L4' T8 28w/ELEE LO	4	0.3	2,840	OCC SENSOR WALLSWITCH	1	215
IN	2954	Wayne Hills-High S	Office Open Guidance	1	3L4' T8 32w/EL	6	0.5	3L4' T8 28w/ELEE LO	6	0.4	3,440	OCC SENSOR CEILING	1	390
IN	2955	Wayne Hills-High S	Storage Decorations	1	3L4' T8 32w/EL	1	0.1	3L4' T8 28w/ELEE LO	1	0.1	500	OCC SENSOR WALLSWITCH	1	9
IN	2956	Wayne Hills-High S	Bath 133 Wt	1	2L4' T8 32w/EL	1	0.1	1L4' T8 28w/ELEE HI/NEW	1	0.0	3,640	OCC SENSOR WALLSWITCH	1	36
IN	2957	Wayne Hills-High S	Bath 133 Wt	1	4L4' T8 32w/EL-8'	1	0.1	2L4' T8 28w/ELEE HI/NEW-8'	1	0.1	3,640	INCLUDED ABOVE		70
IN	2958	Wayne Hills-High S	Bath 133 Wt	1	2L2' T12 STD/STD	1	0.1	2L2' T8 15w/ELEE LO/NEW	1	0.0	3,640	INCLUDED ABOVE		26
IN	2959	Wayne Hills-High S	Bath 133 Mt	1	2L4' T8 32w/EL	1	0.1	1L4' T8 28w/ELEE HI/NEW	1	0.0	3,640	OCC SENSOR WALLSWITCH	1	36
IN	2960	Wayne Hills-High S	Bath 133 Mt	1	4L4' T8 32w/EL-8'	1	0.1	2L4' T8 28w/ELEE HI/NEW-8'	1	0.1	3,640	INCLUDED ABOVE		70

In or Out	Line	Building Name	Location	Fl	Pre Fixture Description	Pre Qty	Pre kW	Post Fixture Description	Post Qty	Post kW	Annual Hours	*Control Description*	*Control Qty*	Control kWH Saved
IN	2961	Wayne Hills-High S	Bath 133 Mt	1	2L2' T12 STD/STD	1	0.1	2L2' T8 15w/ELEE LO/NEW	1	0.0	3,640	INCLUDED ABOVE		26
IN	2962	Wayne Hills-High S	Hall Stair West 4 To West 3	1	3L2' T8 17w/EL	3	0.1	3L2' T8 15w/ELEE LO	3	0.1	3,640	DAYLIGHT HARVESTING SY	3	213
IN	2963	Wayne Hills-High S	Hall Stair West 4 To West 3	1	13W COMPACT HARDWI	2	0.0	NO RETRO		0.0	3,640	NO RETRO		
IN	2964	Wayne Hills-High S	Classroom 134	1	3L4' T8 32w/EL	21	1.8	2L4' T8 28w/ELEE/RFL	21	1.0	1,988	ALREADY EXISTS		
IN	2965	Wayne Hills-High S	Classroom 134	1	3L4' T8 32w/EL	7	0.6	2L4' T8 28w/ELEE/RFL	7	0.3	2,840	INCLUDED ABOVE		286
IN	2966	Wayne Hills-High S	Bath 133Gt	1	2L4' T8 U/EL	5	0.3	2L2' T8 15w/ELEE HI/RFL	5	0.2	3,640	OCC SENSOR WALLSWITCH	1	180
IN	2967	Wayne Hills-High S	Closet Clean	1	1L4' T8 32w/EL	1	0.0	1L4' T8 28w/ELEE HI/NEW	1	0.0	500	OCC SENSOR WALLSWITCH	1	5
IN	2968	Wayne Hills-High S	Bath 133Bt	1	2L4' T8 32w/EL	6	0.4	1L4' T8 28w/ELEE HI/NEW	6	0.2	3,640	OCC SENSOR WALLSWITCH	1	216
IN	2969	Wayne Hills-High S	Classroom 130	1	3L4' T8 32w/EL	3	0.3	2L4' T8 28w/ELEE/RFL	3	0.1	1,988	ALREADY EXISTS		
IN	2970	Wayne Hills-High S	Classroom 130	1	2L4' T8 28w/ELEE	1	0.0	2L4' T8 28w/ELEE/RFL	1	0.0	1,988	ALREADY EXISTS		
IN	2971	Wayne Hills-High S	Classroom 130	1	3L4' T8 32w/EL	9	0.8	2L4' T8 28w/ELEE/RFL	9	0.4	1,988	ALREADY EXISTS		
IN	2972	Wayne Hills-High S	Classroom 130	1	2L4' T8 32w/EL	3	0.2	2L4' T8 28w/ELEE/RFL	3	0.1	1,988	ALREADY EXISTS		
IN	2973	Wayne Hills-High S	Kitchen 131 Prep Area	1	3L4' T8 32w/EL	13	1.1	3L4' T8 28w/ELEE LO	13	0.8	2,840	NO RETRO		
IN	2974	Wayne Hills-High S	Kitchen Grease Hood	1	2L2' T12 STD/STD	1	0.1	2L2' T8 15w/ELEE LO	1	0.0	2,840	NO RETRO		
IN	2975	Wayne Hills-High S	Cafeteria Seating Area	1	3L4' T8 32w/EL	12	1.1	2L4' T8 28w/ELEE HI/RFL	12	0.8	3,440	OCC SENSOR CEILING	1	793
IN	2976	Wayne Hills-High S	Cafeteria Seating Area	1	3L4' T8 32w/EL	12	1.1	2L4' T8 28w/ELEE HI/RFL	12	0.8	3,440	OCC SENSOR CEILING	1	793
IN	2977	Wayne Hills-High S	Cafeteria Seating Area	1	3L4' T8 32w/EL	12	1.1	2L4' T8 28w/ELEE HI/RFL	12	0.8	3,440	OCC SENSOR CEILING	1	793
IN	2978	Wayne Hills-High S	Cafeteria Seating Area	1	3L4' T8 32w/EL	12	1.1	2L4' T8 28w/ELEE HI/RFL	12	0.8	3,440	OCC SENSOR CEILING	1	793
IN	2979	Wayne Hills-High S	Bldg Mt Fixture 1	ext	3x13W COMPACT HARDV	8	0.4	NO RETRO		0.4	4,380	NO RETRO		
IN	2980	Wayne Hills-High S	Bldg Mt Fixture 2	ext	70W HI PRESSURE SODI	2	0.2	21 WATT LED SI/LED21Par38/D	2	0.0	4,380	NO RETRO		
IN	2981	Wayne Hills-High S	Bldg Mt Fixture 3	ext	23W COMPACT HARDWI	85	2.0	NO RETRO		2.0	4,380	NO RETRO		
IN	2982	Wayne Hills-High S	Bldg Mt Fixture 4	ext	72W COMPACT SCREWIN	1	0.1	NO RETRO		0.1	4,380	NO RETRO		
IN	2983	Wayne Hills-High S	Bldg Mt Fixture 5	ext	50W HI PRESSURE SODI	5	0.3	26 WATT LED/NEW	5	0.1	4,380	NO RETRO		
IN	2984	Wayne Hills-High S	Bldg Mt Fixture 6	ext	250W HI PRESSURE SOD	1	0.3	133 WATT LED/NEW	1	0.1	4,380	NO RETRO		
IN	2985	Wayne Hills-High S	Bldg Mt Fixture 7	ext	90W INCANDESCENT	14	1.3	21 WATT LED SI/LED21Par38/D	14	0.3	4,380	NO RETRO		
IN	2986	Wayne Hills-High S	Bldg Mt Fixture 8	ext	2x26W COMPACT HARDV	9	0.5	NO RETRO		0.5	4,380	NO RETRO		
IN	2987	Wayne Hills-High S	Bldg Mt Fixture 9	ext	90W INCANDESCENT	6	0.5	49 WATT LED/NEW	6	0.3	4,380	NO RETRO		
IN	2988	Wayne Hills-High S	Bldg Mt Fixture 10	ext	70W HI PRESSURE SODI	1	0.1	23W COMPACT SI/29712/CF23I	1	0.0	4,380	NO RETRO		
IN	2989	Preakness (Library	Stair By Classroom 2	s	3L4' T8 32w/EL	5	0.4	3L4' T8 28w/ELEE LO	5	0.3	3,620	NO RETRO		
IN	2990	Preakness (Library	Hall 2Nd Floor	2	3L4' T8 32w/EL	6	0.5	3L4' T8 28w/ELEE LO	6	0.4	3,620	NO RETRO		
IN	2991	Preakness (Library	Closet Clean	2	23W COMPACT HARDWI	1	0.0	NO RETRO		0.0	500	NO RETRO		
IN	2992	Preakness (Library	Bath Men	2	3L4' T8 32w/EL	2	0.2	3L4' T8 28w/ELEE LO	2	0.1	3,320	OCC SENSOR CEIL DT 1GAN	1	125
IN	2993	Preakness (Library	Classroom 4	2	3L4' T8 32w/EL	5	0.4	2L4' T8 28w/ELEE HI/RFL	5	0.3	2,520	OCC SENSOR CEILING	1	242
IN	2994	Preakness (Library	Classroom 4	2	3L4' T8 32w/EL	6	0.5	2L4' T8 28w/ELEE HI/RFL	6	0.4	2,520	INCLUDED ABOVE		290
IN	2995	Preakness (Library	Classroom 2	2	3L4' T8 32w/EL	4	0.4	2L4' T8 28w/ELEE HI/RFL	4	0.3	2,520	INCLUDED ABOVE		194
IN	2996	Preakness (Library	Classroom 2	2	3L4' T8 32w/EL	5	0.4	2L4' T8 28w/ELEE HI/RFL	5	0.3	2,520	OCC SENSOR CEILING	1	242
IN	2997	Preakness (Library	Classroom 3	2	3L4' T8 32w/EL	5	0.4	2L4' T8 28w/ELEE HI/RFL	5	0.3	2,520	INCLUDED ABOVE		242
IN	2998	Preakness (Library	Classroom 3	2	3L4' T8 32w/EL	6	0.5	2L4' T8 28w/ELEE HI/RFL	6	0.4	2,520	OCC SENSOR CEILING	1	290
IN	2999	Preakness (Library	Closet 3	2	3L4' T8 32w/EL	1	0.1	3L4' T8 28w/ELEE LO	1	0.1	500	TIMER WALLSWITCH 1GANG	1	9
IN	3000	Preakness (Library	Classroom 1	2	3L4' T8 32w/EL	4	0.4	2L4' T8 28w/ELEE HI/RFL	4	0.3	2,520	INCLUDED ABOVE		194

In or Out	Line	Building Name	Location	Fl	Pre Fixture Description	Pre Qty	Pre kW	Post Fixture Description	Post Qty	Post kW	Annual Hours	*Control Description*	*Control Qty*	Control kWH Saved
IN	3001	Preakness (Library	Classroom 1	2	3L4' T8 32w/EL	4	0.4	2L4' T8 28w/ELEE HI/RFL	4	0.3	2,520	OCC SENSOR CEILING	1	194
IN	3002	Preakness (Library	Hall Main Office	2	3L4' T8 32w/EL	1	0.1	2L4' T8 28w/ELEE HI/NEW	1	0.1	3,620	OCC SENSOR WALLSWITCH	1	70
IN	3003	Preakness (Library	Hall Main Office	2	1L4' T8 32w/EL	1	0.0	1L4' T8 28w/ELEE HI/NEW	1	0.0	3,620	INCLUDED ABOVE		36
IN	3004	Preakness (Library	Office Old Projection Room	2	100W INCANDESCENT	1	0.1	2L2' T8 15w/ELEE LO/NEW	1	0.0	2,320	OCC SENSOR WALLSWITCH	1	17
IN	3005	Preakness (Library	Office Main	2	2L4' T8 U/EL	1	0.1	2L2' T8 15w/ELEE HI/RFL	1	0.0	2,320	OCC SENSOR WALLSWITCH	1	23
IN	3006	Preakness (Library	Closet By Main Office	2	100W INCANDESCENT	1	0.1	23W COMPACT SI/29712/CF23I	1	0.0	500	OCC SENSOR WALLSWITCH	1	3
IN	3007	Preakness (Library	Bath Women	2	3L4' T8 32w/EL	3	0.3	3L4' T8 28w/ELEE LO	3	0.2	3,320	OCC SENSOR CEIL DT 1GAN	1	188
IN	3008	Preakness (Library	Closet Clean	2	100W INCANDESCENT	1	0.1	11W COMPACT SI/29708/CF11I	1	0.0	500	NO RETRO		
IN	3009	Preakness (Library	Stair	s	3L4' T8 32w/EL	5	0.4	3L4' T8 28w/ELEE LO	5	0.3	3,620	NO RETRO		
IN	3010	Preakness (Library	Hall 11 To 12	1	3L4' T8 32w/EL	6	0.5	3L4' T8 28w/ELEE LO	6	0.4	3,620	NO RETRO		
IN	3011	Preakness (Library	Closet Clean	1	2x60W INCANDESCENTS	1	0.1	2L2' T8 15w/ELEE LO/NEW	1	0.0	500	OCC SENSOR WALLSWITCH	1	4
IN	3012	Preakness (Library	Bath Women	1	3L4' T8 32w/EL	3	0.3	3L4' T8 28w/ELEE LO	3	0.2	3,320	OCC SENSOR CEIL DT 1GAN	1	188
IN	3013	Preakness (Library	Classroom 3	1	3L4' T8 32w/EL	6	0.5	2L4' T8 28w/ELEE HI/RFL	6	0.4	2,520	INCLUDED ABOVE		290
IN	3014	Preakness (Library	Classroom 3	1	3L4' T8 32w/EL	4	0.4	2L4' T8 28w/ELEE HI/RFL	4	0.3	2,520	OCC SENSOR CEILING	1	194
IN	3015	Preakness (Library	Classroom 1	1	3L4' T8 32w/EL	4	0.4	2L4' T8 28w/ELEE HI/RFL	4	0.3	2,520	INCLUDED ABOVE		194
IN	3016	Preakness (Library	Classroom 1	1	3L4' T8 32w/EL	6	0.5	2L4' T8 28w/ELEE HI/RFL	6	0.4	2,520	OCC SENSOR CEILING	1	290
IN	3017	Preakness (Library	Closet 1	1	60W INCANDESCENT	1	0.1	23W COMPACT SI/29712/CF23I	1	0.0	500	NO RETRO		
IN	3018	Preakness (Library	Storage Server	1	3L4' T8 32w/EL	1	0.1	3L4' T8 28w/ELEE LO	1	0.1	500	TIMER WALLSWITCH 1GANG	1	9
IN	3019	Preakness (Library	Office 1	1	3L4' T8 32w/EL	2	0.2	3L4' T8 28w/ELEE LO	2	0.1	2,320	OCC SENSOR CEILING	1	88
IN	3020	Preakness (Library	Classroom 4	1	4L4' T8 32w/EL-8'	6	0.7	2L4' T8 28w/ELEE HI/NEW-8'	6	0.4	2,520	OCC SENSOR CEILING	1	290
IN	3021	Preakness (Library	Classroom 4	1	2L4' T8 32w/EL	3	0.2	1L4' T8 28w/ELEE HI/NEW	3	0.1	2,520	INCLUDED ABOVE		75
IN	3022	Preakness (Library	Classroom 4	1	4L4' T8 32w/EL-8'	3	0.3	2L4' T8 28w/ELEE HI/NEW-8'	3	0.2	2,520	INCLUDED ABOVE		145
IN	3023	Preakness (Library	Classroom 4	1	2L4' T8 32w/EL	1	0.1	1L4' T8 28w/ELEE HI/NEW	1	0.0	2,520	INCLUDED ABOVE		25
IN	3024	Preakness (Library	Classroom 2	1	4L4' T8 32w/EL-8'	9	1.0	2L4' T8 28w/ELEE HI/NEW-8'	9	0.6	2,520	OCC SENSOR CEILING	1	435
IN	3025	Preakness (Library	Classroom 2	1	2L4' T8 32w/EL	3	0.2	1L4' T8 28w/ELEE HI/NEW	3	0.1	2,520	INCLUDED ABOVE		75
IN	3026	Preakness (Library	Bath Boys	1	3L4' T8 32w/EL	3	0.3	3L4' T8 28w/ELEE LO	3	0.2	3,320	OCC SENSOR CEIL DT 1GAN	1	188
IN	3027	Preakness (Library	Closet Clean	1	60W INCANDESCENT	1	0.1	23W COMPACT SI/29712/CF23I	1	0.0	500	OCC SENSOR WALLSWITCH	1	3
IN	3028	Preakness (Library	Stair To Main Lobby	s	2L4' T8 32w/EL	1	0.1	2L4' T8 28w/ELEE LO	1	0.0	3,620	NO RETRO		
IN	3029	Preakness (Library	Lobby Main	1	2L4' T8 32w/EL	2	0.1	1L4' T8 28w/ELEE HI/NEW	2	0.1	3,620	NO RETRO		
IN	3030	Preakness (Library	Hall Health Services	1	2L4' T8 32w/EL	6	0.4	1L4' T8 28w/ELEE HI/NEW	6	0.2	3,620	NO RETRO		
IN	3031	Preakness (Library	Closet Clean	1	2L4' T12 EE/EEMAG	1	0.1	1L4' T8 28w/ELEE HI/NEW	1	0.0	500	OCC SENSOR WALLSWITCH	1	5
IN	3032	Preakness (Library	Office Health	1	3L4' T8 32w/EL	5	0.4	3L4' T8 28w/ELEE LO	5	0.3	2,320	NO RETRO		
IN	3033	Preakness (Library	Office Open Copy	1	2x60W INCANDESCENTS	1	0.1	2L2' T8 15w/ELEE LO/NEW	1	0.0	2,720	NO RETRO		
IN	3034	Preakness (Library	Office 7	1	3L4' T8 32w/EL	3	0.3	3L4' T8 28w/ELEE LO	3	0.2	2,320	OCC SENSOR CEILING	1	132
IN	3035	Preakness (Library	Office 7	1	1L2' T12 STD/STD	1	0.0	1L2' T8 15w/ELEE LO/NEW	1	0.0	2,320	NO RETRO		
IN	3036	Preakness (Library	Bath 7	1	60W INCANDESCENT	1	0.1	1L2' T8 15w/ELEE LO/NEW	1	0.0	3,320	TIMER WALLSWITCH 1GANG	1	14
IN	3037	Preakness (Library	Office Open Sub Recruitment Ro	1	3L4' T8 32w/EL	19	1.7	3L4' T8 28w/ELEE LO	19	1.2	2,720	OCC SENSOR CEILING	4	977
IN	3038	Preakness (Library	Bath Sub Recruitment Room 9	1	2L4' T12 EE/EEMAG	1	0.1	1L4' T8 28w/ELEE HI/NEW	1	0.0	3,320	TIMER WALLSWITCH 1GANG	1	33
IN	3039	Preakness (Library	Classroom 11	1	3L4' T8 32w/EL	11	1.0	2L4' T8 28w/ELEE HI/RFL	11	0.7	2,520	OCC SENSOR CEILING	1	532
IN	3040	Preakness (Library	Bath 11	1	60W INCANDESCENT	1	0.1	11W COMPACT SI/29708/CF11I	1	0.0	3,320	TIMER WALLSWITCH 1GANG	1	11

In or Out	Line	Building Name	Location	Fl	Pre Fixture Description	Pre Qty	Pre kW	Post Fixture Description	Post Qty	Post kW	Annual Hours	*Control Description*	*Control Qty*	Control kWH Saved
IN	3041	Preakness (Library	Classroom 13	1	3L4' T8 32w/EL	14	1.2	2L4' T8 28w/ELEE HI/RFL	14	0.9	2,520	NO RETRO		
IN	3042	Preakness (Library	Classroom 12	1	3L4' T8 32w/EL	12	1.1	2L4' T8 28w/ELEE HI/RFL	12	0.8	2,520	OCC SENSOR CEILING	1	581
IN	3043	Preakness (Library	Office Open 10	1	3L4' T8 32w/EL	8	0.7	3L4' T8 28w/ELEE LO	8	0.5	2,720	OCC SENSOR CEILING	2	411
IN	3044	Preakness (Library	Storage Supplies	1	2L4' T8 U/EL	2	0.1	2L2' T8 15w/ELEE HI/RFL	2	0.1	2,120	OCC SENSOR WALLSWITCH	1	42
IN	3045	Preakness (Library	Bath 10	1	2L2' T8 17w/EL	1	0.0	2L2' T8 15w/ELEE LO/NEW	1	0.0	3,320	OCC SENSOR WALLSWITCH	1	24
IN	3046	Preakness (Library	Office 10	1	3L4' T8 32w/EL	2	0.2	3L4' T8 28w/ELEE LO	2	0.1	2,320	OCC SENSOR WALLSWITCH	1	88
IN	3047	Preakness (Library	Conference 10	1	3L4' T8 32w/EL	2	0.2	3L4' T8 28w/ELEE LO	2	0.1	2,320	OCC SENSOR WALLSWITCH	1	88
IN	3048	Preakness (Library	Office Locksmith	1	4L4' T8 32w/EL	2	0.2	2L4' T8 28w/ELEE HI/NEW	2	0.1	2,320	OCC SENSOR CORNER MT.	1	89
IN	3049	Preakness (Library	Bath Locksmit6H	1	2L2' T12 STD/STD	1	0.1	2L2' T8 15w/ELEE LO/NEW	1	0.0	3,320	OCC SENSOR WALLSWITCH	1	24
IN	3050	Preakness (Library	Bath Locksmit6H	1	60W INCANDESCENT	1	0.1	2L2' T8 15w/ELEE LO/NEW	1	0.0	3,320	INCLUDED ABOVE		24
IN	3051	Preakness (Library	Hall Aud	1	3L4' T8 32w/EL	3	0.3	3L4' T8 28w/ELEE LO	3	0.2	3,620	NO RETRO		
IN	3052	Preakness (Library	Auditorium	1	400W METAL HALIDE	10	4.6	138 WATT LED/NEW	10	1.4	2,320	OCC. SENSOR ON HI BAY FI	10	960
IN	3053	Preakness (Library	Stage	1	100W INCANDESCENT	3	0.3	23W COMPACT SI/29712/CF23	3	0.1	2,320	NO RETRO		
IN	3054	Preakness (Library	Storage Stage	1	2L4' T8 32w/EL	2	0.1	1L4' T8 28w/ELEE HI/NEW	2	0.1	500	NO RETRO		
IN	3055	Preakness (Library	Storage Stage	1	2L4' T8 32w/EL	2	0.1	1L4' T8 28w/ELEE HI/NEW	2	0.1	500	NO RETRO		
IN	3056	Preakness (Library	Stair To Basement	s	3L4' T12 EE/EEMAG	1	0.1	3L4' T8 28w/ELEE LO	1	0.1	3,620	NO RETRO		
IN	3057	Preakness (Library	Hall Basement	b	4L4' T8 32w/EL	10	1.1	2L4' T8 28w/ELEE HI/RFL	10	0.6	3,620	NO RETRO		
IN	3058	Preakness (Library	Office Open Bto	b	4L4' T8 32w/EL	20	2.2	2L4' T8 28w/ELEE HI/RFL	20	1.3	2,720	NO RETRO		
IN	3059	Preakness (Library	Mechanical Boiler	b	2x13W COMPACT HARDV	1	0.0	NO RETRO		0.0	500	OCC SENSOR WALLSWITCH	1	5
IN	3060	Preakness (Library	Mechanical Boiler	b	2x13W COMPACT HARDV	1	0.0	NO RETRO		0.0	500	INCLUDED ABOVE		5
IN	3061	Preakness (Library	Mechanical Boiler	b	2L4' T8 32w/EL	1	0.1	1L4' T8 28w/ELEE HI/NEW	1	0.0	500	NO RETRO		
IN	3062	Preakness (Library	Mechanical Boiler	b	2L4' T8 32w/EL	2	0.1	2L4' T8 28w/ELEE HI/NEW	2	0.1	500	NO RETRO		
IN	3063	Preakness (Library	Office Open Custodian	b	3L4' T8 32w/EL	5	0.4	2L4' T8 28w/ELEE HI/NEW	5	0.3	2,720	TIMER WALLSWITCH 1GANG	2	261
IN	3064	Preakness (Library	Office 1	b	3L4' T8 32w/EL	4	0.4	3L4' T8 28w/ELEE LO	4	0.3	2,320	OCC SENSOR CEILING	1	175
IN	3065	Preakness (Library	Office Police	b	3L4' T8 32w/EL	12	1.1	3L4' T8 28w/ELEE LO	12	0.8	2,320	OCC SENSOR CEILING	1	526
IN	3066	Preakness (Library	Library	1	60W INCANDESCENT	2	0.1	11 WATT LED SI/LED10Par20/D	2	0.0	2,520	NO RETRO		
IN	3067	Preakness (Library	Library	1	3L4' T8 32w/EL	71	6.2	2L4' T8 28w/ELEE HI/RFL	71	4.5	2,520	NO RETRO		
IN	3068	Preakness (Library	Bath Boys	1	60W INCANDESCENT	1	0.1	11W COMPACT SI/29708/CF11	1	0.0	3,320	TIMER WALLSWITCH 1GANG	1	11
IN	3069	Preakness (Library	Bath Girls	1	60W INCANDESCENT	1	0.1	11W COMPACT SI/29708/CF11	1	0.0	3,320	TIMER WALLSWITCH 1GANG	1	11
IN	3070	Preakness (Library	Hall Library	1	2L4' T8 32w/EL	7	0.4	1L4' T8 28w/ELEE HI/NEW	7	0.2	3,620	NO RETRO		
IN	3071	Preakness (Library	Hall Library	1	2x20 INCANDESCENTS	1	0.0	3 WATT LED/NEW EXIT BATTE	1	0.0	8,760	NO RETRO		
IN	3072	Preakness (Library	Conference	1	3L4' T8 32w/EL	11	1.0	3L4' T8 28w/ELEE LO	11	0.7	2,320	OCC SENSOR CEILING	1	482
IN	3073	Preakness (Library	Closet Clean	1	60W INCANDESCENT	1	0.1	11W COMPACT SI/29708/CF11	1	0.0	500	TIMER WALLSWITCH 1GANG	1	2
IN	3074	Preakness (Library	Closet Clean	1	3L4' T8 32w/EL	1	0.1	3L4' T8 28w/ELEE LO	1	0.1	500	NO RETRO		
IN	3075	Preakness (Library	Kitchen Clean	1	1L2' T12 STD/STD	1	0.0	1L2' T8 15w/ELEE LO/NEW	1	0.0	1,920	NO RETRO		
IN	3076	Preakness (Library	Bath Unisex	1	2L4' T8 32w/EL	1	0.1	1L4' T8 28w/ELEE HI/NEW	1	0.0	3,320	OCC SENSOR WALLSWITCH	1	33
IN	3077	Preakness (Library	Bath Unisex	1	1L2' T12 STD/STD	1	0.0	1L2' T8 15w/ELEE LO/NEW	1	0.0	3,320	INCLUDED ABOVE		14
IN	3078	Preakness (Library	Closet Clean	1	60W INCANDESCENT	1	0.1	11W COMPACT SI/29708/CF11	1	0.0	500	NO RETRO		
IN	3079	Preakness (Library	Bath Unisex	1	2L4' T8 32w/EL	1	0.1	1L4' T8 28w/ELEE HI/NEW	1	0.0	3,320	OCC SENSOR WALLSWITCH	1	33
IN	3080	Preakness (Library	Bath Unisex	1	1L2' T12 STD/STD	1	0.0	1L2' T8 15w/ELEE LO/NEW	1	0.0	3,320	INCLUDED ABOVE		14

In or Out	Line	Building Name	Location	Fl	Pre Fixture Description	Pre Qty	Pre kW	Post Fixture Description	Post Qty	Post kW	Annual Hours	*Control Description*	*Control Qty*	Control kWH Saved
IN	3081	Preakness (Library	Office Open Staff	1	3L4' T8 32w/EL	9	0.8	3L4' T8 28w/ELEE LO	9	0.6	2,720	OCC SENSOR CEILING	1	463
IN	3082	Preakness (Library	Office Staff	1	3L4' T8 32w/EL	3	0.3	3L4' T8 28w/ELEE LO	3	0.2	2,320	OCC SENSOR CEILING	1	132
IN	3083	Preakness (Library	Bldg Mt Fixture 1	ext	60W INCANDESCENT	4	0.2	11 WATT LED SI/LED10Par20/D	4	0.0	4,380	NO RETRO		
IN	3084	Preakness (Library	Bldg Mt Fixture 2	ext	100W HI PRESSURE SOD	3	0.4	50 WATT LED/NEW	3	0.2	4,380	NO RETRO		
IN	3085	Preakness (Library	Bldg Mt Fixture 3	ext	100W HI PRESSURE SOD	2	0.3	50 WATT LED/NEW	2	0.1	4,380	NO RETRO		
IN	3086	Preakness (Library	Bldg Mt Fixture 4	ext	60W INCANDESCENT	2	0.1	23W COMPACT SI/29712/CF23I	2	0.0	4,380	NO RETRO		
IN	3087	Preakness (Library	Bldg Mt Fixture 5	ext	250W HI PRESSURE SOD	6	1.8	133 WATT LED/NEW	6	0.8	4,380	NO RETRO		
IN	3088	Preakness (Library	Bldg Mt Fixture 6	ext	1000W METAL HALIDE	2	2.2	231 WATT LED/NEW	2	0.5	4,380	NO RETRO		
IN	3089	Preakness (Library	Bldg Mt Fixture 7	ext	150W HI PRESSURE SOD	1	0.2	133 WATT LED/NEW	1	0.1	4,380	NO RETRO		
IN	3090	Preakness (Library	Bldg Mt Fixture 8	ext	50W HI PRESSURE SODI	2	0.1	26 WATT LED/NEW	2	0.1	4,380	NO RETRO		
IN	3091	Preakness (Library	Bldg Mt Fixture 9	ext	23W COMPACT HARDWIF	2	0.0	NO RETRO		0.0	4,380	NO RETRO		
IN	3092	Preakness (Library	Parking Lot Fixture 10	ext	400W HI PRESSURE SOD	2	0.9	231 WATT LED/NEW	2	0.5	4,380	NO RETRO		
IN	3093	Schuyler-Colfax-Mi	Classroom Portables 1	1	2L4' T12 EE/EEMAG	16	1.1	1L4' T8 28w/ELEE HI/NEW	16	0.5	2,840	OCC SENSOR CEILING	1	450
IN	3094	Schuyler-Colfax-Mi	Classroom Portables 2	1	2L4' T12 EE/EEMAG	16	1.1	1L4' T8 28w/ELEE HI/NEW	16	0.5	2,840	OCC SENSOR CEILING	1	450
IN	3095	Schuyler-Colfax-Mi	Cafeteria Seating Area	1	6L4' T8 32w/EL-8'	32	5.8	4L4' T8 28w/ELEE HI/NEW-8'	32	4.0	3,440	OCC SENSOR CEILING	4	4,161
IN	3096	Schuyler-Colfax-Mi	Stage	1	2L8' T12 HO STD/EL	6	1.2	4L4' T8 28w/ELEE HI/STRIP KIT	6	0.8	3,440	NO RETRO		
IN	3097	Schuyler-Colfax-Mi	Stage	1	60W INCANDESCENT	4	0.2	23W COMPACT SI/29712/CF23I	4	0.1	3,440	NO RETRO		
IN	3098	Schuyler-Colfax-Mi	Kitchen 163 Prep Area	1	4L4' T12 EE/EEMAG-8'	11	1.5	4L4' T8 28w/ELEE LO/NEW-8'	11	0.9	2,840	NO RETRO		
IN	3099	Schuyler-Colfax-Mi	Kitchen 163 Prep Area	1	2L4' T12 EE/EEMAG	5	0.4	2L4' T8 28w/ELEE LO/NEW	5	0.2	2,840	NO RETRO		
IN	3100	Schuyler-Colfax-Mi	Kitchen Grease Hood	1	60W INCANDESCENT	16	1.0	23W COMPACT SI/29712/CF23I	16	0.4	2,840	NO RETRO		
IN	3101	Schuyler-Colfax-Mi	Bath 163 Tr	1	1L4' T12 EE/EEMAG	1	0.0	1L4' T8 28w/ELEE LO/NEW	1	0.0	3,640	OCC SENSOR WALLSWITCH	1	24
IN	3102	Schuyler-Colfax-Mi	Storage 163 As	1	60W INCANDESCENT	1	0.1	2L2' T8 15w/ELEE LO/NEW	1	0.0	500	NO RETRO		
IN	3103	Schuyler-Colfax-Mi	Storage 163 Ds	1	4L4' T12 EE/EEMAG-8'	1	0.1	2L4' T8 28w/ELEE HI/NEW-8'	1	0.1	500	NO RETRO		
IN	3104	Schuyler-Colfax-Mi	Storage 163Cs	1	4L4' T12 EE/EEMAG-8'	2	0.3	2L4' T8 28w/ELEE HI/NEW-8'	2	0.1	500	NO RETRO		
IN	3105	Schuyler-Colfax-Mi	Mechanical 163 Me	1	60W INCANDESCENT	1	0.1	13 WATT LED/NEW	1	0.0	500	TIMER WALLSWITCH 1GANG	1	2
IN	3106	Schuyler-Colfax-Mi	Office 163 Ao	1	2L4' T12 EE/EEMAG	1	0.1	1L4' T8 28w/ELEE HI/NEW	1	0.0	2,840	OCC SENSOR WALLSWITCH	1	28
IN	3107	Schuyler-Colfax-Mi	Cafeteria Seating Area	1	4L4' T12 EE/EEMAG-8'	32	4.5	4L4' T8 28w/ELEE LO-8'	32	2.7	3,440	OCC SENSOR CEILING	4	2,741
IN	3108	Schuyler-Colfax-Mi	Cafeteria Seating Area	1	2L4' T12 EE/EEMAG	16	1.1	2L4' T8 28w/ELEE LO	16	0.7	3,440	INCLUDED ABOVE		694
IN	3109	Schuyler-Colfax-Mi	Cafeteria Seating Area	1	4L4' T8 32w/EL	12	1.3	4L4' T8 28w/ELEE/NEW	12	1.1	3,440	INCLUDED ABOVE		1,164
IN	3110	Schuyler-Colfax-Mi	Office 162 Sc	1	2L8' T12 EE/EEMAG	1	0.1	4L4' T8 28w/ELEE LO/STRIP KI	1	0.1	2,840	OCC SENSOR CEILING	1	71
IN	3111	Schuyler-Colfax-Mi	Office 162 Sc	1	4L4' T12 EE/EEMAG	2	0.3	2L4' T8 28w/ELEE HI/NEW	2	0.1	2,840	NO RETRO		
IN	3112	Schuyler-Colfax-Mi	Office 162 Sc	1	4L4' T12 EE/EEMAG	1	0.1	2L4' T8 28w/ELEE HI/NEW	1	0.1	2,840	NO RETRO		
IN	3113	Schuyler-Colfax-Mi	Storage 162 Sc	1	4L4' T12 EE/EEMAG	2	0.3	2L4' T8 28w/ELEE HI/NEW	2	0.1	2,440	NO RETRO		
IN	3114	Schuyler-Colfax-Mi	Classroom 164	1	2L4' T8 32w/EL	1	0.1	2L4' T8 28w/ELEE HI/RFL	1	0.1	2,840	OCC SENSOR WALLSWITCH	1	55
IN	3115	Schuyler-Colfax-Mi	Classroom 164	1	4L4' T12 EE/EEMAG	10	1.4	2L4' T8 28w/ELEE HI/RFL	10	0.6	2,840	NO RETRO		
IN	3116	Schuyler-Colfax-Mi	Classroom 164	1	4L4' T8 32w/EL	10	1.1	2L4' T8 28w/ELEE HI/RFL	10	0.6	2,840	NO RETRO		
IN	3117	Schuyler-Colfax-Mi	Classroom 164	1	3L4' T12 EE/EEMAG	8	0.9	2L4' T8 28w/ELEE HI/RFL	8	0.5	2,840	NO RETRO		
IN	3118	Schuyler-Colfax-Mi	Office 164Ao	1	3L4' T8 32w/EL	4	0.4	3L4' T8 28w/ELEE LO	4	0.3	2,840	OCC SENSOR CEILING	1	215
IN	3119	Schuyler-Colfax-Mi	Storage Instruments	1	1L4' T12 EE/EEMAG	2	0.1	1L4' T8 28w/ELEE HI/NEW	2	0.1	2,440	TIMER WALLSWITCH 1GANG	1	48
IN	3120	Schuyler-Colfax-Mi	Storage Instruments	1	2L4' T8 32w/EL	1	0.1	1L4' T8 28w/ELEE HI/NEW	1	0.0	2,440	OCC SENSOR WALLSWITCH	1	24

In or Out	Line	Building Name	Location	Fl	Pre Fixture Description	Pre Qty	Pre kW	Post Fixture Description	Post Qty	Post kW	Annual Hours	*Control Description*	*Control Qty*	Control kWH Saved
IN	3121	Schuyler-Colfax-Mi	Hall By Practice Rooms	1	2L4' T8 U/EL	2	0.1	2L2' T8 15w/ELEE HI/RFL	2	0.1	3,640	TIMER WALLSWITCH 1GANG	1	72
IN	3122	Schuyler-Colfax-Mi	Hall By Practice Rooms	1	4L4' T8 32w/EL	1	0.1	2L4' T8 28w/ELEE HI/RFL	1	0.1	3,640	INCLUDED ABOVE		70
IN	3123	Schuyler-Colfax-Mi	Hall By Practice Rooms	1	2L4' T8 U/EL	1	0.1	2L2' T8 15w/ELEE HI/RFL	1	0.0	3,640	OCC SENSOR WALLSWITCH	1	36
IN	3124	Schuyler-Colfax-Mi	Storage 1	1	2L4' T8 U/EL	1	0.1	2L2' T8 15w/ELEE HI/RFL	1	0.0	500	NO RETRO		
IN	3125	Schuyler-Colfax-Mi	Storage 2	1	2L4' T8 U/EL	1	0.1	2L2' T8 15w/ELEE HI/RFL	1	0.0	500	NO RETRO		
IN	3126	Schuyler-Colfax-Mi	Storage 3	1	2L4' T8 U/EL	1	0.1	2L2' T8 15w/ELEE HI/RFL	1	0.0	500	NO RETRO		
IN	3127	Schuyler-Colfax-Mi	Bath Staff	1	2L4' T8 32w/EL	1	0.1	1L4' T8 28w/ELEE HI/NEW	1	0.0	3,640	OCC SENSOR CEIL DT 1GAN	1	36
IN	3128	Schuyler-Colfax-Mi	Bath Staff	1	3L4' T8 32w/EL	1	0.1	3L4' T8 28w/ELEE LO	1	0.1	3,640	OCC SENSOR CEIL DT 1GAN	1	69
IN	3129	Schuyler-Colfax-Mi	Bath Staff	1	32W CIRCLELINE HARDW	1	0.0	2L2' T8 15w/ELEE LO/NEW	1	0.0	3,640	OCC SENSOR CEIL DT 1GAN	1	26
IN	3130	Schuyler-Colfax-Mi	Bath Staff	1	3L4' T8 32w/EL	2	0.2	3L4' T8 28w/ELEE LO	2	0.1	3,640	OCC SENSOR CEIL DT 1GAN	1	138
IN	3131	Schuyler-Colfax-Mi	Bath Staff	1	4L4' T8 32w/EL-8'	1	0.1	2L4' T8 28w/ELEE HI/NEW-8'	1	0.1	3,640	INCLUDED ABOVE		70
IN	3132	Schuyler-Colfax-Mi	Bath 148 Bt	1	32W CIRCLELINE HARDW	1	0.0	2L2' T8 15w/ELEE LO/NEW	1	0.0	3,640	OCC SENSOR CEIL DT 1GAN	1	26
IN	3133	Schuyler-Colfax-Mi	Bath 148 Bt	1	32W CIRCLELINE HARDW	2	0.1	2L2' T8 15w/ELEE LO/NEW	2	0.0	3,640	OCC SENSOR CEIL DT 1GAN	1	52
IN	3134	Schuyler-Colfax-Mi	Bath 148 Bt	1	3L4' T8 32w/EL	1	0.1	3L4' T8 28w/ELEE LO	1	0.1	3,640	INCLUDED ABOVE		69
IN	3135	Schuyler-Colfax-Mi	Bath 148 Bt	1	4L4' T8 32w/EL-8'	1	0.1	2L4' T8 28w/ELEE HI/NEW-8'	1	0.1	3,640	INCLUDED ABOVE		70
IN	3136	Schuyler-Colfax-Mi	Closet Clean	1	23W COMPACT HARDWIF	2	0.0	NO RETRO		0.0	500	OCC SENSOR WALLSWITCH	1	7
IN	3137	Schuyler-Colfax-Mi	Classroom 101 Science	1	2L4' T8 32w/EL	13	0.8	2L4' T8 28w/ELEE HI/RFL	13	0.8	2,840	OCC SENSOR CEILING	4	709
IN	3138	Schuyler-Colfax-Mi	Classroom 101 Science	1	2L4' T8 U/EL	2	0.1	2L2' T8 15w/ELEE HI/RFL	2	0.1	2,840	INCLUDED ABOVE		56
IN	3139	Schuyler-Colfax-Mi	Storage 101 Ao	1	2L4' T8 32w/EL	2	0.1	2L4' T8 28w/ELEE LO	2	0.1	2,440	OCC SENSOR CEILING	1	61
IN	3140	Schuyler-Colfax-Mi	Storage 101 As	1	60W INCANDESCENT	1	0.1	13 WATT LED/NEW	1	0.0	500	OCC SENSOR WALLSWITCH	1	2
IN	3141	Schuyler-Colfax-Mi	Storage Beakers	1	3L4' T8 32w/EL	2	0.2	2L4' T8 28w/ELEE HI/RFL	2	0.1	2,440	OCC SENSOR WALLSWITCH	1	94
IN	3142	Schuyler-Colfax-Mi	Classroom 102	1	2L4' T8 32w/EL	14	0.8	2L4' T8 28w/ELEE HI/RFL	14	0.9	2,840	OCC SENSOR CEILING	4	763
IN	3143	Schuyler-Colfax-Mi	Classroom 102	1	2L4' T8 U/EL	2	0.1	2L2' T8 15w/ELEE HI/RFL	2	0.1	2,840	INCLUDED ABOVE		56
IN	3144	Schuyler-Colfax-Mi	Storage 102 Sc	1	3L4' T8 32w/EL	1	0.1	3L4' T8 28w/ELEE LO	1	0.1	500	OCC SENSOR WALLSWITCH	1	9
IN	3145	Schuyler-Colfax-Mi	Classroom 104	1	4L4' T12 EE/EEMAG-8'	8	1.1	2L4' T8 28w/ELEE HI/NEW-8'	8	0.5	2,840	OCC SENSOR CEILING	1	436
IN	3146	Schuyler-Colfax-Mi	Classroom 104	1	2L4' T12 EE/EEMAG	1	0.1	1L4' T8 28w/ELEE HI/NEW	1	0.0	2,840	INCLUDED ABOVE		28
IN	3147	Schuyler-Colfax-Mi	Classroom 104	1	2L4' T12 EE/EEMAG-8'	1	0.1	2L4' T8 28w/ELEE HI/NEW-8'	1	0.1	2,840	INCLUDED ABOVE		55
IN	3148	Schuyler-Colfax-Mi	Classroom 104	1	1L4' T12 EE/EEMAG	1	0.0	1L4' T8 28w/ELEE HI/NEW	1	0.0	2,840	INCLUDED ABOVE		28
IN	3149	Schuyler-Colfax-Mi	Office Middle	1	1L4' T12 EE/EEMAG	4	0.2	1L4' T8 28w/ELEE LO/NEW	4	0.1	2,840	OCC SENSOR CEILING	1	75
IN	3150	Schuyler-Colfax-Mi	Office Middle	1	1L2' T12 STD/STD	1	0.0	1L2' T8 15w/ELEE LO/NEW	1	0.0	2,840	INCLUDED ABOVE		12
IN	3151	Schuyler-Colfax-Mi	Classroom 107	1	4L4' T12 EE/EEMAG-8'	8	1.1	2L4' T8 28w/ELEE HI/NEW-8'	8	0.5	2,840	OCC SENSOR CEILING	1	436
IN	3152	Schuyler-Colfax-Mi	Classroom 107	1	2L4' T12 EE/EEMAG	1	0.1	1L4' T8 28w/ELEE HI/NEW	1	0.0	2,840	INCLUDED ABOVE		28
IN	3153	Schuyler-Colfax-Mi	Classroom 107	1	2L4' T12 EE/EEMAG-8'	2	0.1	2L4' T8 28w/ELEE HI/NEW-8'	2	0.1	2,840	INCLUDED ABOVE		109
IN	3154	Schuyler-Colfax-Mi	Classroom 106	1	4L4' T12 EE/EEMAG-8'	8	1.1	2L4' T8 28w/ELEE HI/NEW-8'	8	0.5	2,840	OCC SENSOR CEILING	1	436
IN	3155	Schuyler-Colfax-Mi	Classroom 106	1	2L4' T12 EE/EEMAG	1	0.1	1L4' T8 28w/ELEE HI/NEW	1	0.0	2,840	INCLUDED ABOVE		28
IN	3156	Schuyler-Colfax-Mi	Classroom 106	1	2L4' T12 EE/EEMAG-8'	1	0.1	2L4' T8 28w/ELEE HI/NEW-8'	1	0.1	2,840	INCLUDED ABOVE		55
IN	3157	Schuyler-Colfax-Mi	Classroom 106	1	1L4' T12 EE/EEMAG	1	0.0	1L4' T8 28w/ELEE HI/NEW	1	0.0	2,840	INCLUDED ABOVE		28
IN	3158	Schuyler-Colfax-Mi	Classroom 105	1	4L4' T12 EE/EEMAG-8'	8	1.1	2L4' T8 28w/ELEE HI/NEW-8'	8	0.5	2,840	OCC SENSOR CEILING	1	436
IN	3159	Schuyler-Colfax-Mi	Classroom 105	1	2L4' T12 EE/EEMAG	1	0.1	1L4' T8 28w/ELEE HI/NEW	1	0.0	2,840	INCLUDED ABOVE		28
IN	3160	Schuyler-Colfax-Mi	Classroom 105	1	2L4' T12 EE/EEMAG-8'	1	0.1	2L4' T8 28w/ELEE HI/NEW-8'	1	0.1	2,840	INCLUDED ABOVE		55

In or Out	Line	Building Name	Location	Fl	Pre Fixture Description	Pre Qty	Pre kW	Post Fixture Description	Post Qty	Post kW	Annual Hours	*Control Description*	*Control Qty*	Control kWH Saved
IN	3161	Schuyler-Colfax-Mi	Classroom 105	1	1L4' T12 EE/EEMAG	1	0.0	1L4' T8 28w/ELEE HI/NEW	1	0.0	2,840	INCLUDED ABOVE		28
IN	3162	Schuyler-Colfax-Mi	Classroom 103	1	4L4' T12 EE/EEMAG-8'	9	1.3	2L4' T8 28w/ELEE HI/NEW-8'	9	0.6	2,840	OCC SENSOR CEILING	1	491
IN	3163	Schuyler-Colfax-Mi	Classroom 103	1	2L4' T12 EE/EEMAG-8'	3	0.2	1L4' T8 28w/ELEE HI/NEW	3	0.1	2,840	INCLUDED ABOVE		84
IN	3164	Schuyler-Colfax-Mi	Classroom 109	1	6L4' T8 32w/EL-8'	6	1.1	6L4' T8 28w/ELEE LO-8'	6	0.8	2,840	NO RETRO		
IN	3165	Schuyler-Colfax-Mi	Classroom 109	1	6L4' T8 32w/EL-8'	6	1.1	6L4' T8 28w/ELEE LO-8'	6	0.8	2,840	NO RETRO		
IN	3166	Schuyler-Colfax-Mi	Classroom 108	1	4L4' T12 EE/EEMAG-8'	9	1.3	2L4' T8 28w/ELEE HI/NEW-8'	9	0.6	2,840	OCC SENSOR CEILING	1	491
IN	3167	Schuyler-Colfax-Mi	Classroom 108	1	2L4' T12 EE/EEMAG-8'	3	0.2	2L4' T8 28w/ELEE HI/NEW-8'	3	0.2	2,840	INCLUDED ABOVE		164
IN	3168	Schuyler-Colfax-Mi	Classroom 110	1	4L4' T12 EE/EEMAG-8'	8	1.1	2L4' T8 28w/ELEE HI/NEW-8'	8	0.5	2,840	OCC SENSOR CEILING	1	436
IN	3169	Schuyler-Colfax-Mi	Classroom 110	1	2L4' T12 EE/EEMAG	1	0.1	1L4' T8 28w/ELEE HI/NEW	1	0.0	2,840	INCLUDED ABOVE		28
IN	3170	Schuyler-Colfax-Mi	Classroom 110	1	2L4' T12 EE/EEMAG-8'	2	0.1	2L4' T8 28w/ELEE HI/NEW-8'	2	0.1	2,840	INCLUDED ABOVE		109
IN	3171	Schuyler-Colfax-Mi	Office Middle	1	2L4' T8 32w/EL-8'	4	0.2	2L4' T8 28w/ELEE LO/NEW-8'	4	0.2	2,840	OCC SENSOR CEILING	1	143
IN	3172	Schuyler-Colfax-Mi	Office Middle	1	2L2' T8 17w/EL	1	0.0	2L2' T8 15w/ELEE LO/NEW	1	0.0	2,840	INCLUDED ABOVE		20
IN	3173	Schuyler-Colfax-Mi	Classroom 111	1	4L4' T12 EE/EEMAG-8'	8	1.1	2L4' T8 28w/ELEE HI/NEW-8'	8	0.5	2,840	OCC SENSOR CEILING	1	436
IN	3174	Schuyler-Colfax-Mi	Classroom 111	1	2L4' T12 EE/EEMAG	1	0.1	1L4' T8 28w/ELEE HI/NEW	1	0.0	2,840	INCLUDED ABOVE		28
IN	3175	Schuyler-Colfax-Mi	Classroom 111	1	2L4' T12 EE/EEMAG-8'	2	0.1	2L4' T8 28w/ELEE HI/NEW-8'	2	0.1	2,840	INCLUDED ABOVE		109
IN	3176	Schuyler-Colfax-Mi	Classroom 112	1	4L4' T12 EE/EEMAG-8'	8	1.1	2L4' T8 28w/ELEE HI/NEW-8'	8	0.5	2,840	OCC SENSOR CEILING	1	436
IN	3177	Schuyler-Colfax-Mi	Classroom 112	1	2L4' T12 EE/EEMAG	1	0.1	1L4' T8 28w/ELEE HI/NEW	1	0.0	2,840	INCLUDED ABOVE		28
IN	3178	Schuyler-Colfax-Mi	Classroom 112	1	2L4' T12 EE/EEMAG-8'	1	0.1	2L4' T8 28w/ELEE HI/NEW-8'	1	0.1	2,840	INCLUDED ABOVE		55
IN	3179	Schuyler-Colfax-Mi	Classroom 112	1	1L4' T12 EE/EEMAG	1	0.0	1L4' T8 28w/ELEE HI/NEW	1	0.0	2,840	INCLUDED ABOVE		28
IN	3180	Schuyler-Colfax-Mi	Classroom 113	1	4L4' T12 EE/EEMAG-8'	8	1.1	2L4' T8 28w/ELEE HI/NEW-8'	8	0.5	2,840	OCC SENSOR CEILING	1	436
IN	3181	Schuyler-Colfax-Mi	Classroom 113	1	2L4' T12 EE/EEMAG	1	0.1	1L4' T8 28w/ELEE HI/NEW	1	0.0	2,840	INCLUDED ABOVE		28
IN	3182	Schuyler-Colfax-Mi	Classroom 113	1	2L4' T12 EE/EEMAG-8'	1	0.1	2L4' T8 28w/ELEE HI/NEW-8'	1	0.1	2,840	INCLUDED ABOVE		55
IN	3183	Schuyler-Colfax-Mi	Classroom 113	1	1L4' T12 EE/EEMAG	1	0.0	1L4' T8 28w/ELEE HI/NEW	1	0.0	2,840	INCLUDED ABOVE		28
IN	3184	Schuyler-Colfax-Mi	Classroom 114	1	6L4' T8 32w/EL-8'	6	1.1	6L4' T8 28w/ELEE LO-8'	6	0.8	2,840	OCC SENSOR CEILING	1	644
IN	3185	Schuyler-Colfax-Mi	Classroom 115	1	4L4' T12 EE/EEMAG-8'	9	1.3	2L4' T8 28w/ELEE HI/NEW-8'	9	0.6	2,840	OCC SENSOR CEILING	1	491
IN	3186	Schuyler-Colfax-Mi	Classroom 115	1	2L4' T12 EE/EEMAG-8'	2	0.1	2L4' T8 28w/ELEE HI/NEW-8'	2	0.1	2,840	INCLUDED ABOVE		109
IN	3187	Schuyler-Colfax-Mi	Classroom 115	1	1L4' T12 EE/EEMAG	1	0.0	1L4' T8 28w/ELEE HI/NEW	1	0.0	2,840	INCLUDED ABOVE		28
IN	3188	Schuyler-Colfax-Mi	Classroom 116	1	4L4' T12 EE/EEMAG-8'	8	1.1	2L4' T8 28w/ELEE HI/NEW-8'	8	0.5	2,840	OCC SENSOR CEILING	1	436
IN	3189	Schuyler-Colfax-Mi	Classroom 116	1	2L4' T12 EE/EEMAG	1	0.1	1L4' T8 28w/ELEE HI/NEW	1	0.0	2,840	INCLUDED ABOVE		28
IN	3190	Schuyler-Colfax-Mi	Classroom 116	1	2L4' T12 EE/EEMAG-8'	1	0.1	2L4' T8 28w/ELEE HI/NEW-8'	1	0.1	2,840	INCLUDED ABOVE		55
IN	3191	Schuyler-Colfax-Mi	Classroom 116	1	1L4' T12 EE/EEMAG	1	0.0	1L4' T8 28w/ELEE HI/NEW	1	0.0	2,840	INCLUDED ABOVE		28
IN	3192	Schuyler-Colfax-Mi	Office Middle	1	2L4' T8 32w/EL-8'	4	0.2	2L4' T8 28w/ELEE LO/NEW-8'	4	0.2	2,840	OCC SENSOR CEILING	1	143
IN	3193	Schuyler-Colfax-Mi	Office Middle	1	2L2' T8 17w/EL	1	0.0	2L2' T8 15w/ELEE LO/NEW	1	0.0	2,840	OCC SENSOR WALLSWITCH	1	20
IN	3194	Schuyler-Colfax-Mi	Classroom 117	1	4L4' T12 EE/EEMAG-8'	8	1.1	2L4' T8 28w/ELEE HI/NEW-8'	8	0.5	2,840	OCC SENSOR CEILING	1	436
IN	3195	Schuyler-Colfax-Mi	Classroom 117	1	2L4' T12 EE/EEMAG	1	0.1	1L4' T8 28w/ELEE HI/NEW	1	0.0	2,840	INCLUDED ABOVE		28
IN	3196	Schuyler-Colfax-Mi	Classroom 117	1	2L4' T12 EE/EEMAG-8'	1	0.1	2L4' T8 28w/ELEE HI/NEW-8'	1	0.1	2,840	INCLUDED ABOVE		55
IN	3197	Schuyler-Colfax-Mi	Classroom 117	1	1L4' T12 EE/EEMAG	1	0.0	1L4' T8 28w/ELEE HI/NEW	1	0.0	2,840	INCLUDED ABOVE		28
IN	3198	Schuyler-Colfax-Mi	Classroom 118	1	4L4' T12 EE/EEMAG-8'	8	1.1	2L4' T8 28w/ELEE HI/NEW-8'	8	0.5	2,840	OCC SENSOR CEILING	1	436
IN	3199	Schuyler-Colfax-Mi	Classroom 118	1	2L4' T12 EE/EEMAG	1	0.1	1L4' T8 28w/ELEE HI/NEW	1	0.0	2,840	INCLUDED ABOVE		28
IN	3200	Schuyler-Colfax-Mi	Classroom 118	1	2L4' T12 EE/EEMAG-8'	2	0.1	2L4' T8 28w/ELEE HI/NEW-8'	2	0.1	2,840	INCLUDED ABOVE		109

In or Out	Line	Building Name	Location	Fl	Pre Fixture Description	Pre Qty	Pre kW	Post Fixture Description	Post Qty	Post kW	Annual Hours	*Control Description*	*Control Qty*	Control kWH Saved
IN	3201	Schuyler-Colfax-Mi	Classroom 119	1	4L4' T12 EE/EEMAG-8'	8	1.1	2L4' T8 28w/ELEE HI/NEW-8'	8	0.5	2,840	OCC SENSOR CEILING	1	436
IN	3202	Schuyler-Colfax-Mi	Classroom 119	1	2L4' T12 EE/EEMAG	1	0.1	1L4' T8 28w/ELEE HI/NEW	1	0.0	2,840	INCLUDED ABOVE		28
IN	3203	Schuyler-Colfax-Mi	Classroom 119	1	2L4' T12 EE/EEMAG-8'	2	0.1	2L4' T8 28w/ELEE HI/NEW-8'	2	0.1	2,840	INCLUDED ABOVE		109
IN	3204	Schuyler-Colfax-Mi	Classroom 121	1	6L4' T12 EE/EEMAG-8'	9	1.9	4L4' T8 28w/ELEE/NEW-8'	9	0.8	2,840	OCC SENSOR CEILING	1	721
IN	3205	Schuyler-Colfax-Mi	Classroom 121	1	1L4' T8 32w/EL	3	0.1	1L4' T8 28w/ELEE HI/NEW	3	0.1	2,840	INCLUDED ABOVE		84
IN	3206	Schuyler-Colfax-Mi	Classroom 122	1	6L4' T12 EE/EEMAG-8'	9	1.9	4L4' T8 28w/ELEE/NEW-8'	9	0.8	2,840	OCC SENSOR CEILING	1	721
IN	3207	Schuyler-Colfax-Mi	Classroom 122	1	1L4' T8 32w/EL	3	0.1	1L4' T8 28w/ELEE HI/NEW	3	0.1	2,840	INCLUDED ABOVE		84
IN	3208	Schuyler-Colfax-Mi	Classroom 123	1	4L4' T12 EE/EEMAG-8'	9	1.3	4L4' T8 28w/ELEE/NEW-8'	9	0.8	2,840	OCC SENSOR CEILING	1	721
IN	3209	Schuyler-Colfax-Mi	Classroom 123	1	1L4' T8 32w/EL	3	0.1	1L4' T8 28w/ELEE HI/NEW	3	0.1	2,840	INCLUDED ABOVE		84
IN	3210	Schuyler-Colfax-Mi	Classroom 124	1	4L4' T12 EE/EEMAG-8'	8	1.1	2L4' T8 28w/ELEE HI/NEW-8'	8	0.5	2,840	OCC SENSOR CEILING	1	436
IN	3211	Schuyler-Colfax-Mi	Classroom 124	1	2L4' T12 EE/EEMAG	2	0.1	1L4' T8 28w/ELEE HI/NEW	2	0.1	2,840	INCLUDED ABOVE		56
IN	3212	Schuyler-Colfax-Mi	Classroom 124	1	4L4' T8 32w/EL-8'	1	0.1	2L4' T8 28w/ELEE HI/NEW-8'	1	0.1	2,840	INCLUDED ABOVE		55
IN	3213	Schuyler-Colfax-Mi	Office 124	1	4L4' T12 EE/EEMAG-8'	1	0.1	2L4' T8 28w/ELEE HI/NEW-8'	1	0.1	2,840	OCC SENSOR CEILING	1	55
IN	3214	Schuyler-Colfax-Mi	Office 124	1	2L4' T12 EE/EEMAG	1	0.1	1L4' T8 28w/ELEE HI/NEW	1	0.0	2,840	INCLUDED ABOVE		28
IN	3215	Schuyler-Colfax-Mi	Office 124	1	2L4' T8 32w/EL-8'	1	0.1	2L4' T8 28w/ELEE LO/NEW-8'	1	0.0	2,840	INCLUDED ABOVE		36
IN	3216	Schuyler-Colfax-Mi	Office 124	1	1L4' T8 32w/EL	1	0.0	1L4' T8 28w/ELEE LO/NEW	1	0.0	2,840	INCLUDED ABOVE		19
IN	3217	Schuyler-Colfax-Mi	Classroom 120	1	4L4' T12 EE/EEMAG-8'	9	1.3	2L4' T8 28w/ELEE HI/NEW-8'	9	0.6	2,840	OCC SENSOR CEILING	1	491
IN	3218	Schuyler-Colfax-Mi	Classroom 120	1	2L4' T8 32w/EL-8'	3	0.2	2L4' T8 28w/ELEE HI/NEW-8'	3	0.2	2,840	INCLUDED ABOVE		164
IN	3219	Schuyler-Colfax-Mi	Hall D	1	2L4' T12 EE/EEMAG	12	0.8	2L4' T8 28w/ELEE/NEW	12	0.6	3,640	NO RETRO		
IN	3220	Schuyler-Colfax-Mi	Hall D	1	1L4' T12 EE/EEMAG	1	0.0	1L4' T8 28w/ELEE LO/NEW	1	0.0	3,640	NO RETRO		
IN	3221	Schuyler-Colfax-Mi	Hall C	1	2L4' T12 EE/EEMAG	12	0.8	2L4' T8 28w/ELEE/NEW	12	0.6	3,640	NO RETRO		
IN	3222	Schuyler-Colfax-Mi	Hall C	1	1L4' T12 EE/EEMAG	1	0.0	1L4' T8 28w/ELEE LO/NEW	1	0.0	3,640	NO RETRO		
IN	3223	Schuyler-Colfax-Mi	Hall B	1	4L4' T8 32w/EL	9	1.0	2L4' T8 28w/ELEE HI/RFL	9	0.6	3,640	NO RETRO		
IN	3224	Schuyler-Colfax-Mi	Hall B	1	2L4' T12 EE/EEMAG	1	0.1	1L4' T8 28w/ELEE HI/NEW	1	0.0	3,640	NO RETRO		
IN	3225	Schuyler-Colfax-Mi	Hall B	1	1L4' T12 EE/EEMAG	1	0.0	1L4' T8 28w/ELEE LO/NEW	1	0.0	3,640	NO RETRO		
IN	3226	Schuyler-Colfax-Mi	Hall 102 To 101	1	2L4' T12 EE/EEMAG	1	0.1	1L4' T8 28w/ELEE HI/NEW	1	0.0	3,640	NO RETRO		
IN	3227	Schuyler-Colfax-Mi	Hall 102 To 101	1	3L4' T8 32w/EL	9	0.8	3L4' T8 28w/ELEE LO	9	0.6	3,640	NO RETRO		
IN	3228	Schuyler-Colfax-Mi	Gym Main	1	400W METAL HALIDE	46	20.9	138 WATT LED/NEW	46	6.3	3,440	OCC. SENSOR ON HI BAY FI	46	6,551
IN	3229	Schuyler-Colfax-Mi	Gym Main	1	4L4' T12 EE/EEMAG	7	1.0	REMOVE FIXTURE	7		3,440	NO RETRO		
IN	3230	Schuyler-Colfax-Mi	Storage 126 Sc	1	4L4' T8 32w/EL	2	0.2	2L4' T8 28w/ELEE HI/RFL	2	0.1	500	NO RETRO		
IN	3231	Schuyler-Colfax-Mi	Storage Ping Pong Tables	1	4L4' T8 32w/EL	2	0.2	2L4' T8 28w/ELEE HI/RFL	2	0.1	2,440	NO RETRO		
IN	3232	Schuyler-Colfax-Mi	Storage 126 Sc	1	2L4' T12 EE/EEMAG	1	0.1	1L4' T8 28w/ELEE HI/NEW	1	0.0	500	OCC SENSOR WALLSWITCH	1	5
IN	3233	Schuyler-Colfax-Mi	Hall Gym	1	2L4' T8 32w/EL	9	0.5	2L4' T8 28w/ELEE/NEW	9	0.4	3,640	NO RETRO		
IN	3234	Schuyler-Colfax-Mi	Hall Gym	1	4L4' T12 EE/EEMAG	8	1.1	2L4' T8 28w/ELEE HI/NEW	8	0.5	3,640	NO RETRO		
IN	3235	Schuyler-Colfax-Mi	Gym 128 Aux	1	4L4' T12 EE/EEMAG	24	3.4	2L4' T8 28w/ELEE HI/NEW	24	1.5	3,440	NO RETRO		
IN	3236	Schuyler-Colfax-Mi	Gym 129 Aux	1	4L4' T12 EE/EEMAG	24	3.4	2L4' T8 28w/ELEE HI/NEW	24	1.5	3,440	NO RETRO		
IN	3237	Schuyler-Colfax-Mi	Storage 129 As	1	2L4' T8 32w/EL	1	0.1	1L4' T8 28w/ELEE HI/NEW	1	0.0	500	OCC SENSOR WALLSWITCH	1	5
IN	3238	Schuyler-Colfax-Mi	Hall 130 Girls Locker	1	60W INCANDESCENT	1	0.1	11W COMPACT SI/29708/CF11I	1	0.0	3,640	OCC SENSOR WALLSWITCH	1	12
IN	3239	Schuyler-Colfax-Mi	Closet Clean	1	60W INCANDESCENT	1	0.1	23W COMPACT SI/29712/CF23I	1	0.0	500	TIMER WALLSWITCH 1GANG	1	3
IN	3240	Schuyler-Colfax-Mi	Locker 130 Girls	1	3L2' T8 17w/EL	2	0.1	3L2' T8 15w/ELEE LO	2	0.1	3,640	NO RETRO		

In or Out	Line	Building Name	Location	Fl	Pre Fixture Description	Pre Qty	Pre kW	Post Fixture Description	Post Qty	Post kW	Annual Hours	*Control Description*	*Control Qty*	Control kWH Saved
IN	3241	Schuyler-Colfax-Mi	Locker 130 Girls	1	3L4' T8 32w/EL	8	0.7	3L4' T8 28w/ELEE LO	8	0.5	3,640	NO RETRO		
IN	3242	Schuyler-Colfax-Mi	Locker Toilet Area	1	2L2' T12 STD/STD	2	0.1	2L2' T8 15w/ELEE LO/NEW	2	0.0	3,640	OCC SENSOR WALLSWITCH	1	52
IN	3243	Schuyler-Colfax-Mi	Locker Toilet Area	1	2L4' T8 32w/EL	3	0.2	2L4' T8 28w/ELEE LO/NEW	3	0.1	3,640	INCLUDED ABOVE		138
IN	3244	Schuyler-Colfax-Mi	Office Coach	1	2L4' T8 U/EL	2	0.1	2L2' T8 15w/ELEE HI/RFL	2	0.1	2,840	OCC SENSOR WALLSWITCH	1	56
IN	3245	Schuyler-Colfax-Mi	Bath Coach	1	3x13W COMPACT HARDV	1	0.0	NO RETRO		0.0	3,640	OCC SENSOR WALLSWITCH	1	49
IN	3246	Schuyler-Colfax-Mi	Hall By 131 In Girls Locker	1	2x13W COMPACT HARDV	1	0.0	NO RETRO		0.0	3,640	NO RETRO		
IN	3247	Schuyler-Colfax-Mi	Office Open 131	1	8L4' T12 EE/EEMAG	10	2.8	8L4' T8 28w/ELEE LO	10	1.7	3,440	OCC. SENSOR ON HI BAY FI	10	1,713
IN	3248	Schuyler-Colfax-Mi	Storage 131 Co	1	2L4' T8 32w/EL	1	0.1	1L4' T8 28w/ELEE HI/NEW	1	0.0	2,440	TIMER WALLSWITCH 1GANG	1	24
IN	3249	Schuyler-Colfax-Mi	Conference 131 Co	1	8L4' T12 EE/EEMAG	1	0.3	8L4' T8 28w/ELEE LO	1	0.2	2,840	OCC SENSOR CEILING	1	141
IN	3250	Schuyler-Colfax-Mi	Storage 131 Go	1	60W INCANDESCENT	1	0.1	23W COMPACT SI/29712/CF23I	1	0.0	500	OCC SENSOR WALLSWITCH	1	3
IN	3251	Schuyler-Colfax-Mi	Classroom 132	1	8L4' T12 EE/EEMAG	8	2.2	8L4' T8 28w/ELEE LO	8	1.3	2,840	OCC SENSOR CEILING	1	1,131
IN	3252	Schuyler-Colfax-Mi	Storage 128Bs	1	3x13W COMPACT HARDV	1	0.0	NO RETRO		0.0	500	OCC SENSOR WALLSWITCH	1	7
IN	3253	Schuyler-Colfax-Mi	Storage 128As	1	60W INCANDESCENT	1	0.1	13 WATT LED/NEW	1	0.0	500	OCC SENSOR WALLSWITCH	1	2
IN	3254	Schuyler-Colfax-Mi	Classroom 133	1	8L4' T12 EE/EEMAG	8	2.2	8L4' T8 28w/ELEE LO	8	1.3	2,840	OCC SENSOR CEILING	1	1,131
IN	3255	Schuyler-Colfax-Mi	Bath 136 Gt	1	32W CIRCLELINE HARDW	1	0.0	2L2' T8 15w/ELEE LO/NEW	1	0.0	3,640	OCC SENSOR CEIL DT 1GAN	1	26
IN	3256	Schuyler-Colfax-Mi	Bath 136 Gt	1	1L4' T12 EE/EEMAG	1	0.0	1L4' T8 28w/ELEE LO/NEW	1	0.0	3,640	OCC SENSOR CEIL DT 1GAN	1	24
IN	3257	Schuyler-Colfax-Mi	Bath 136 Gt	1	3L4' T8 32w/EL	1	0.1	3L4' T8 28w/ELEE LO	1	0.1	3,640	INCLUDED ABOVE		69
IN	3258	Schuyler-Colfax-Mi	Bath 136 Bt	1	32W CIRCLELINE HARDW	1	0.0	2L2' T8 15w/ELEE LO/NEW	1	0.0	3,640	OCC SENSOR CEIL DT 1GAN	2	26
IN	3259	Schuyler-Colfax-Mi	Bath 136 Bt	1	2L4' T8 32w/EL	2	0.1	2L4' T8 28w/ELEE LO/NEW	2	0.1	3,640	INCLUDED ABOVE		92
IN	3260	Schuyler-Colfax-Mi	Closet Clean	1	23W COMPACT HARDWIF	1	0.0	NO RETRO		0.0	500	OCC SENSOR WALLSWITCH	1	4
IN	3261	Schuyler-Colfax-Mi	Bath 125 Bt	1	2L4' T8 32w/EL	1	0.1	2L4' T8 28w/ELEE LO	1	0.0	3,640	OCC SENSOR CEIL DT 1GAN	1	46
IN	3262	Schuyler-Colfax-Mi	Bath 125 Bt	1	4L4' T12 EE/EEMAG	2	0.3	2L4' T8 28w/ELEE HI/RFL	2	0.1	3,640	INCLUDED ABOVE		140
IN	3263	Schuyler-Colfax-Mi	Closet Clean	1	2L4' T8 32w/EL	1	0.1	2L4' T8 28w/ELEE LO/NEW	1	0.0	500	OCC SENSOR WALLSWITCH	1	6
IN	3264	Schuyler-Colfax-Mi	Bath 125 Bt	1	2L4' T8 32w/EL	1	0.1	2L4' T8 28w/ELEE LO	1	0.0	3,640	OCC SENSOR CEIL DT 1GAN	1	46
IN	3265	Schuyler-Colfax-Mi	Bath 125 Bt	1	2L4' T12 EE/EEMAG	1	0.1	1L4' T8 28w/ELEE HI/NEW	1	0.0	3,640	INCLUDED ABOVE		36
IN	3266	Schuyler-Colfax-Mi	Bath 125 Bt	1	2L4' T8 32w/EL	1	0.1	1L4' T8 28w/ELEE HI/NEW	1	0.0	3,640	INCLUDED ABOVE		36
IN	3267	Schuyler-Colfax-Mi	Bath 125 Bt	1	2L2' T8 17w/EL	1	0.0	2L2' T8 15w/ELEE LO/NEW	1	0.0	3,640	INCLUDED ABOVE		26
IN	3268	Schuyler-Colfax-Mi	Locker 127 Boys	1	3L2' T8 17w/EL	1	0.0	3L2' T8 15w/ELEE LO	1	0.0	3,640	NO RETRO		
IN	3269	Schuyler-Colfax-Mi	Locker 127 Boys	1	3L4' T8 32w/EL	9	0.8	3L4' T8 28w/ELEE LO	9	0.6	3,640	NO RETRO		
IN	3270	Schuyler-Colfax-Mi	Locker 127 Boys	1	100W INCANDESCENT	6	0.6	23W COMPACT SI/29712/CF23I	6	0.1	100	NO RETRO		
IN	3271	Schuyler-Colfax-Mi	Office 127 Ao	1	3L4' T8 32w/EL	2	0.2	2L4' T8 28w/ELEE HI/NEW	2	0.1	2,840	OCC SENSOR WALLSWITCH	1	109
IN	3272	Schuyler-Colfax-Mi	Bath B	1	60W INCANDESCENT	1	0.1	11W COMPACT SI/29708/CF11I	1	0.0	3,640	OCC SENSOR WALLSWITCH	1	12
IN	3273	Schuyler-Colfax-Mi	Closet Clean	1	60W INCANDESCENT	1	0.1	23W COMPACT SI/29712/CF23I	1	0.0	500	OCC SENSOR WALLSWITCH	1	3
IN	3274	Schuyler-Colfax-Mi	Storage 127 Sc	1	3L4' T8 32w/EL	4	0.4	3L4' T8 28w/ELEE LO	4	0.3	500	OCC SENSOR WALLSWITCH	1	38
IN	3275	Schuyler-Colfax-Mi	Bath 127 Boys	1	2L4' T12 EE/EEMAG	2	0.1	1L4' T8 28w/ELEE HI/NEW	2	0.1	3,640	OCC SENSOR CEIL DT 1GAN	1	72
IN	3276	Schuyler-Colfax-Mi	Bath 127 Boys	1	2L2' T8 17w/EL	1	0.0	2L2' T8 15w/ELEE LO/NEW	1	0.0	3,640	INCLUDED ABOVE		26
IN	3277	Schuyler-Colfax-Mi	Hall Door 6 To Door 1	1	3L4' T8 32w/EL	35	3.1	3L4' T8 28w/ELEE LO	35	2.2	3,640	NO RETRO		
IN	3278	Schuyler-Colfax-Mi	Office Open Main	1	3L4' T8 32w/EL	10	0.9	3L4' T8 28w/ELEE LO	10	0.6	3,440	NO RETRO		
IN	3279	Schuyler-Colfax-Mi	Office Open Main	1	3L4' T8 32w/EL	10	0.9	2L4' T8 28w/ELEE HI/RFL	10	0.6	3,440	OCC SENSOR CEILING	1	660
IN	3280	Schuyler-Colfax-Mi	Office Open Main	1	1L4' T12 EE/EEMAG	1	0.0	1L4' T8 28w/ELEE LO	1	0.0	3,440	INCLUDED ABOVE		23

In or Out	Line	Building Name	Location	Fl	Pre Fixture Description	Pre Qty	Pre kW	Post Fixture Description	Post Qty	Post kW	Annual Hours	*Control Description*	*Control Qty*	Control kWH Saved
IN	3281	Schuyler-Colfax-Mi	Office Nurse	1	3L4' T8 32w/EL	1	0.1	3L4' T8 28w/ELEE LO (1L&2L BA	1	0.1	2,840	OCC SENSOR WALLSWITCH	1	55
IN	3282	Schuyler-Colfax-Mi	Office 137 Fo	1	3L4' T8 32w/EL	1	0.1	3L4' T8 28w/ELEE LO (1L&2L BA	1	0.1	2,840	OCC SENSOR WALLSWITCH	1	55
IN	3283	Schuyler-Colfax-Mi	Office 137 Eo	1	4L4' T8 32w/EL	2	0.2	4L4' T8 28w/ELEE LO (2Lx2 BAL	2	0.2	2,840	OCC SENSOR WALLSWITCH	1	143
IN	3284	Schuyler-Colfax-Mi	Office Open Nurse	1	4L4' T8 32w/EL	2	0.2	4L4' T8 28w/ELEE LO (2Lx2 BAL	2	0.2	3,440	OCC SENSOR CEILING	1	173
IN	3285	Schuyler-Colfax-Mi	Office Open Nurse	1	2L4' T8 32w/EL	1	0.1	1L4' T8 28w/ELEE HI/NEW	1	0.0	3,440	INCLUDED ABOVE		34
IN	3286	Schuyler-Colfax-Mi	Bath Nurse	1	1L4' T8 32w/EL	1	0.0	1L4' T8 28w/ELEE LO	1	0.0	3,640	OCC SENSOR WALLSWITCH	1	24
IN	3287	Schuyler-Colfax-Mi	Closet Med Supplies	1	1L4' T8 32w/EL	1	0.0	1L4' T8 28w/ELEE LO	1	0.0	500	OCC SENSOR WALLSWITCH	1	3
IN	3288	Schuyler-Colfax-Mi	Office Med Supplies	1	3L4' T8 32w/EL	2	0.2	3L4' T8 28w/ELEE LO (1L&2L BA	2	0.1	2,840	OCC SENSOR WALLSWITCH	1	109
IN	3289	Schuyler-Colfax-Mi	Office Open Exam	1	4L4' T8 32w/EL	2	0.2	4L4' T8 28w/ELEE LO (2Lx2 BAL	2	0.2	3,440	OCC SENSOR CEILING	1	173
IN	3290	Schuyler-Colfax-Mi	Hall Book Shelf	1	2L4' T12 EE/EEMAG-8'	1	0.1	2L4' T8 28w/ELEE LO/STRIP KI	1	0.0	3,640	TIMER WALLSWITCH 1GANG	1	46
IN	3291	Schuyler-Colfax-Mi	Conference 137 Ho	1	1L4' T12 EE/EEMAG	1	0.0	1L4' T8 28w/ELEE LO	1	0.0	2,840	OCC SENSOR WALLSWITCH	1	19
IN	3292	Schuyler-Colfax-Mi	Office Asst. Principal	1	4L4' T8 32w/EL	2	0.2	4L4' T8 28w/ELEE LO (2Lx2 BAL	2	0.2	2,840	OCC SENSOR WALLSWITCH	1	143
IN	3293	Schuyler-Colfax-Mi	Office Principal	1	3L4' T8 32w/EL	4	0.4	3L4' T8 28w/ELEE LO (1L&2L BA	4	0.3	2,840	OCC SENSOR CEILING	1	218
IN	3294	Schuyler-Colfax-Mi	Conference 137 Bo	1	3L4' T8 32w/EL	2	0.2	3L4' T8 28w/ELEE LO (1L&2L BA	2	0.1	2,840	OCC SENSOR CEILING	1	109
IN	3295	Schuyler-Colfax-Mi	Storage 137 Ao	1	4L4' T8 32w/EL	2	0.2	4L4' T8 28w/ELEE LO (2Lx2 BAL	2	0.2	2,440	OCC SENSOR WALLSWITCH	1	123
IN	3296	Schuyler-Colfax-Mi	Lounge 138 Staff	1	4L4' T12 EE/EEMAG	2	0.3	2L4' T8 28w/ELEE HI/NEW	2	0.1	2,520	OCC SENSOR WALLSWITCH	1	97
IN	3297	Schuyler-Colfax-Mi	Kitchen 138 Staff	1	4L4' T12 EE/EEMAG	2	0.3	4L4' T8 28w/ELEE LO	2	0.2	2,840	OCC SENSOR WALLSWITCH	1	141
IN	3298	Schuyler-Colfax-Mi	Hall 148Bt To 150Sc	1	3L4' T8 32w/EL	9	0.8	3L4' T8 28w/ELEE LO	9	0.6	3,640	NO RETRO		
IN	3299	Schuyler-Colfax-Mi	Hall Boys Locker To Girls Locker	1	3L4' T8 32w/EL	9	0.8	3L4' T8 28w/ELEE LO	9	0.6	3,640	NO RETRO		
IN	3300	Schuyler-Colfax-Mi	Library 139 Ao	1	4L4' T12 EE/EEMAG	4	0.6	2L4' T8 28w/ELEE HI/RFL	4	0.3	2,840	OCC SENSOR CEILING	1	218
IN	3301	Schuyler-Colfax-Mi	Library 139 Bo	1	4L4' T12 EE/EEMAG	6	0.8	2L4' T8 28w/ELEE HI/RFL	6	0.4	2,840	OCC SENSOR CEILING	1	327
IN	3302	Schuyler-Colfax-Mi	Library	1	4L2' T12 STD/STD	3	0.3	2L2' T8 15w/ELEE HI/RFL	3	0.1	2,840	NO RETRO		
IN	3303	Schuyler-Colfax-Mi	Library	1	4L4' T12 EE/EEMAG	56	7.8	2L4' T8 28w/ELEE HI/RFL	56	3.6	2,840	NO RETRO		
IN	3304	Schuyler-Colfax-Mi	Library	1	4L4' T12 EE/EEMAG-8'	6	0.8	4L4' T8 28w/ELEE LO-8'	6	0.5	2,840	NO RETRO		
IN	3305	Schuyler-Colfax-Mi	Library	1	2L4' T12 EE/EEMAG	1	0.1	2L4' T8 28w/ELEE LO	1	0.0	2,840	NO RETRO		
IN	3306	Schuyler-Colfax-Mi	Office 139 Co	1	4L4' T12 EE/EEMAG	4	0.6	2L4' T8 28w/ELEE HI/RFL	4	0.3	2,840	OCC SENSOR WALLSWITCH	1	218
IN	3307	Schuyler-Colfax-Mi	Office Open 139 Sb	1	4L4' T12 EE/EEMAG	6	0.8	2L4' T8 28w/ELEE HI/RFL	6	0.4	3,440	OCC SENSOR CEILING	1	396
IN	3308	Schuyler-Colfax-Mi	Office 139 Sa	1	4L4' T12 EE/EEMAG	4	0.6	2L4' T8 28w/ELEE HI/RFL	4	0.3	2,840	OCC SENSOR WALLSWITCH	1	218
IN	3309	Schuyler-Colfax-Mi	Storage 150 Sc	1	2L4' T12 EE/EEMAG	4	0.3	1L4' T8 28w/ELEE HI/NEW	4	0.1	500	OCC SENSOR WALLSWITCH	1	20
IN	3310	Schuyler-Colfax-Mi	Classroom 152Sgi	1	4L4' T12 EE/EEMAG-8'	5	0.7	2L4' T8 28w/ELEE HI/NEW-8'	5	0.3	2,840	OCC SENSOR CEILING	1	273
IN	3311	Schuyler-Colfax-Mi	Classroom 152Sgi	1	2L4' T8 32w/EL	1	0.1	1L4' T8 28w/ELEE HI/NEW	1	0.0	2,840	INCLUDED ABOVE		28
IN	3312	Schuyler-Colfax-Mi	Classroom 153Sgi	1	4L4' T12 EE/EEMAG-8'	5	0.7	2L4' T8 28w/ELEE HI/NEW-8'	5	0.3	2,840	OCC SENSOR CEILING	1	273
IN	3313	Schuyler-Colfax-Mi	Classroom 153Sgi	1	2L4' T8 32w/EL	1	0.1	1L4' T8 28w/ELEE HI/NEW	1	0.0	2,840	INCLUDED ABOVE		28
IN	3314	Schuyler-Colfax-Mi	Classroom 154Sgi	1	4L4' T12 EE/EEMAG-8'	6	0.8	2L4' T8 28w/ELEE HI/NEW-8'	6	0.4	2,840	OCC SENSOR CEILING	1	327
IN	3315	Schuyler-Colfax-Mi	Office Open 161 Ma	1	4L4' T8 32w/EL	2	0.2	2L4' T8 28w/ELEE/NEW	2	0.1	3,440	NO RETRO		
IN	3316	Schuyler-Colfax-Mi	Office Open 161 Ma	1	1L2' T12 STD/STD	4	0.1	1L2' T8 15w/ELEE LO/NEW	4	0.1	3,440	NO RETRO		
IN	3317	Schuyler-Colfax-Mi	Office Open 161 Ma	1	60W INCANDESCENT	1	0.1	23W COMPACT SI/29712/CF23I	1	0.0	3,440	NO RETRO		
IN	3318	Schuyler-Colfax-Mi	Mechanical Electrical	1	2L4' T8 32w/EL	1	0.1	1L4' T8 28w/ELEE HI/NEW	1	0.0	500	OCC SENSOR WALLSWITCH	1	5
IN	3319	Schuyler-Colfax-Mi	Closet Clean	1	42W COMPACT HARDWIF	1	0.0	NO RETRO		0.0	500	OCC SENSOR WALLSWITCH	1	7
IN	3320	Schuyler-Colfax-Mi	Mechanical Boiler	1	4L4' T8 32w/EL-8'	6	0.7	4L4' T8 28w/ELEE LO-8'	6	0.5	500	TIMER WALLSWITCH 1GANG	1	75

In or Out	Line	Building Name	Location	Fl	Pre Fixture Description	Pre Qty	Pre kW	Post Fixture Description	Post Qty	Post kW	Annual Hours	*Control Description*	*Control Qty*	Control kWH Saved
IN	3321	Schuyler-Colfax-Mi	Mechanical Boiler	1	2L4' T8 32w/EL	1	0.1	1L4' T8 28w/ELEE HI/NEW	1	0.0	500	INCLUDED ABOVE		5
IN	3322	Schuyler-Colfax-Mi	Classroom 160	1	3L4' T8 32w/EL	19	1.7	2L4' T8 28w/ELEE HI/RFL	19	1.2	2,840	OCC SENSOR CEILING	2	1,036
IN	3323	Schuyler-Colfax-Mi	Storage 159 Pr	1	2L4' T12 EE/EEMAG	3	0.2	1L4' T8 28w/ELEE HI/NEW	3	0.1	2,440	OCC SENSOR CEILING	1	72
IN	3324	Schuyler-Colfax-Mi	Classroom 159	1	3L4' T8 32w/EL	19	1.7	2L4' T8 28w/ELEE HI/RFL	19	1.2	2,840	OCC SENSOR CEILING	4	1,036
IN	3325	Schuyler-Colfax-Mi	Classroom 158	1	4L4' T12 EE/EEMAG-8'	11	1.5	2L4' T8 28w/ELEE HI/NEW-8'	11	0.7	2,840	OCC SENSOR CEILING	1	600
IN	3326	Schuyler-Colfax-Mi	Office Middle	1	4L4' T12 EE/EEMAG-8'	4	0.6	2L4' T8 28w/ELEE HI/NEW-8'	4	0.3	2,840	OCC SENSOR CEILING	1	218
IN	3327	Schuyler-Colfax-Mi	Office Middle	1	1L2' T8 17w/EL	1	0.0	2L2' T8 15w/ELEE LO/NEW	1	0.0	2,840	OCC SENSOR WALLSWITCH	1	20
IN	3328	Schuyler-Colfax-Mi	Classroom 155	1	4L4' T12 EE/EEMAG-8'	11	1.5	2L4' T8 28w/ELEE HI/NEW-8'	11	0.7	2,840	OCC SENSOR CEILING	1	600
IN	3329	Schuyler-Colfax-Mi	Classroom 156	1	4L4' T12 EE/EEMAG-8'	11	1.5	2L4' T8 28w/ELEE HI/NEW-8'	11	0.7	2,840	OCC SENSOR CEILING	1	600
IN	3330	Schuyler-Colfax-Mi	Classroom 157	1	4L4' T12 EE/EEMAG-8'	11	1.5	2L4' T8 28w/ELEE HI/NEW-8'	11	0.7	2,840	OCC SENSOR CEILING	1	600
IN	3331	Schuyler-Colfax-Mi	Storage 157	1	2x60W INCANDESCENTS	2	0.2	11W COMPACT SI/29708/CF11I	4	0.0	500	TIMER WALLSWITCH 1GANG	1	7
IN	3332	Schuyler-Colfax-Mi	Classroom 143	1	4L4' T12 EE/EEMAG-8'	11	1.5	2L4' T8 28w/ELEE HI/NEW-8'	11	0.7	2,840	OCC SENSOR CEILING	1	600
IN	3333	Schuyler-Colfax-Mi	Office Middle	1	4L4' T12 EE/EEMAG-8'	4	0.6	2L4' T8 28w/ELEE HI/NEW-8'	4	0.3	2,840	OCC SENSOR CEILING	1	218
IN	3334	Schuyler-Colfax-Mi	Office Middle	1	1L2' T8 17w/EL	1	0.0	2L2' T8 15w/ELEE LO/NEW	1	0.0	2,840	OCC SENSOR WALLSWITCH	1	20
IN	3335	Schuyler-Colfax-Mi	Classroom 144	1	4L4' T12 EE/EEMAG-8'	11	1.5	2L4' T8 28w/ELEE HI/NEW-8'	11	0.7	2,840	OCC SENSOR CEILING	1	600
IN	3336	Schuyler-Colfax-Mi	Classroom 141	1	4L4' T12 EE/EEMAG-8'	11	1.5	2L4' T8 28w/ELEE HI/NEW-8'	11	0.7	2,840	OCC SENSOR CEILING	1	600
IN	3337	Schuyler-Colfax-Mi	Classroom 142	1	4L4' T12 EE/EEMAG-8'	11	1.5	2L4' T8 28w/ELEE HI/NEW-8'	11	0.7	2,840	OCC SENSOR CEILING	1	600
IN	3338	Schuyler-Colfax-Mi	Storage Middle	1	2x60W INCANDESCENTS	2	0.2	11W COMPACT SI/29708/CF11I	4	0.0	500	TIMER WALLSWITCH 1GANG	1	7
IN	3339	Schuyler-Colfax-Mi	Hall Middle	1	2x60W INCANDESCENTS	2	0.2	11W COMPACT SI/29708/CF11I	4	0.0	3,640	TIMER WALLSWITCH 1GANG	1	48
IN	3340	Schuyler-Colfax-Mi	Classroom 145	1	6L4' T12 EE/EEMAG-8'	12	2.5	4L4' T8 28w/ELEE/NEW-8'	12	1.1	2,840	OCC SENSOR CEILING	1	961
IN	3341	Schuyler-Colfax-Mi	Classroom 145	1	2L4' T12 EE/EEMAG	3	0.2	2L4' T8 28w/ELEE/NEW	3	0.1	2,840	OCC SENSOR WALLSWITCH	1	123
IN	3342	Schuyler-Colfax-Mi	Storage 145 Ao	1	3L4' T12 EE/EEMAG	2	0.2	2L4' T8 28w/ELEE/NEW	2	0.1	2,440	OCC SENSOR WALLSWITCH	1	70
IN	3343	Schuyler-Colfax-Mi	Classroom 140	1	6L4' T12 EE/EEMAG-8'	9	1.9	4L4' T8 28w/ELEE/NEW-8'	9	0.8	2,840	OCC SENSOR CEILING	1	721
IN	3344	Schuyler-Colfax-Mi	Classroom 140	1	3L4' T12 EE/EEMAG	4	0.4	2L4' T8 28w/ELEE/NEW	4	0.2	2,840	INCLUDED ABOVE		164
IN	3345	Schuyler-Colfax-Mi	Classroom 136 Wood	1	6L4' T12 EE/EEMAG-8'	20	4.2	4L4' T8 28w/ELEE/NEW-8'	20	1.9	2,840	NO RETRO		
IN	3346	Schuyler-Colfax-Mi	Classroom 136 Wood	1	3L4' T12 EE/EEMAG	4	0.4	2L4' T8 28w/ELEE/NEW	4	0.2	2,840	NO RETRO		
IN	3347	Schuyler-Colfax-Mi	Storage Varnish	1	150W INCANDESCENT	1	0.2	23W COMPACT SI/29712/CF23I	1	0.0	500	TIMER WALLSWITCH 1GANG	1	3
IN	3348	Schuyler-Colfax-Mi	Storage Varnish	1	4L4' T12 EE/EEMAG	1	0.1	2L4' T8 28w/ELEE HI/RFL	1	0.1	500	OCC SENSOR WALLSWITCH	1	10
IN	3349	Schuyler-Colfax-Mi	Office Wood Shop	1	2L4' T8 U/EL	2	0.1	2L2' T8 15w/ELEE HI/RFL	2	0.1	2,840	OCC SENSOR CEILING	1	56
IN	3350	Schuyler-Colfax-Mi	Storage Wood Shop	1	4L4' T12 EE/EEMAG	1	0.1	2L4' T8 28w/ELEE HI/RFL	1	0.1	500	OCC SENSOR WALLSWITCH	1	10
IN	3351	Schuyler-Colfax-Mi	Classroom 135	1	6L4' T12 EE/EEMAG-8'	14	2.9	4L4' T8 28w/ELEE/NEW-8'	14	1.3	2,840	OCC SENSOR CEILING	1	1,121
IN	3352	Schuyler-Colfax-Mi	Classroom 135	1	3L4' T12 EE/EEMAG	3	0.3	2L4' T8 28w/ELEE/NEW	3	0.1	2,840	INCLUDED ABOVE		123
IN	3353	Schuyler-Colfax-Mi	Classroom 135	1	3L4' T12 EE/EEMAG	2	0.2	2L4' T8 28w/ELEE/NEW	2	0.1	2,840	TIMER WALLSWITCH 1GANG	1	82
IN	3354	Schuyler-Colfax-Mi	Storage 135 As	1	3L4' T12 EE/EEMAG	1	0.1	2L4' T8 28w/ELEE/NEW	1	0.0	500	OCC SENSOR WALLSWITCH	1	7
IN	3355	Schuyler-Colfax-Mi	Storage 135 Bs	1	3L4' T12 EE/EEMAG	1	0.1	2L4' T8 28w/ELEE/NEW	1	0.0	500	OCC SENSOR WALLSWITCH	1	7
IN	3356	Schuyler-Colfax-Mi	Classroom 134	1	6L4' T8 32w/EL-8'	12	2.2	4L4' T8 28w/ELEE/NEW-8'	12	1.1	2,840	OCC SENSOR CEILING	1	961
IN	3357	Schuyler-Colfax-Mi	Classroom 134	1	3L4' T8 32w/EL	3	0.3	3L4' T8 28w/ELEE LO	3	0.2	2,840	INCLUDED ABOVE		161
IN	3358	Schuyler-Colfax-Mi	Hall 130 To 136	1	3L4' T8 32w/EL	22	1.9	3L4' T8 28w/ELEE LO	22	1.4	3,640	NO RETRO		
IN	3359	Schuyler-Colfax-Mi	Hall 140 To 145	1	3L4' T8 32w/EL	7	0.6	3L4' T8 28w/ELEE LO	7	0.4	3,640	NO RETRO		
IN	3360	Schuyler-Colfax-Mi	Hall 143 To 146Gt	1	3L4' T8 32w/EL	10	0.9	3L4' T8 28w/ELEE LO	10	0.6	3,640	NO RETRO		

In or Out	Line	Building Name	Location	Fl	Pre Fixture Description	Pre Qty	Pre kW	Post Fixture Description	Post Qty	Post kW	Annual Hours	*Control Description*	*Control Qty*	Control kWH Saved
IN	3361	Schuyler-Colfax-Mi	Hall 143 To 146Gt	1	3L2' T8 17w/EL	1	0.0	3L2' T8 15w/ELEE LO	1	0.0	3,640	NO RETRO		
IN	3362	Schuyler-Colfax-Mi	Hall 146Gt To 157	1	3L4' T8 32w/EL	6	0.5	3L4' T8 28w/ELEE LO	6	0.4	3,640	NO RETRO		
IN	3363	Schuyler-Colfax-Mi	Hall 146Gt To 157	1	3L2' T12 STD/STD	9	0.7	3L2' T8 15w/ELEE LO	9	0.4	3,640	NO RETRO		
IN	3364	Schuyler-Colfax-Mi	Hall 146Gt To 157	1	3L4' T8 32w/EL	9	0.8	3L4' T8 28w/ELEE LO	9	0.6	3,640	NO RETRO		
IN	3365	Schuyler-Colfax-Mi	Classroom 151	1	4L4' T12 EE/EEMAG-8'	6	0.8	2L4' T8 28w/ELEE HI/NEW-8'	6	0.4	2,840	OCC SENSOR CEILING	1	327
IN	3366	Schuyler-Colfax-Mi	Bath 146Bt	1	2L4' T8 32w/EL-8'	4	0.2	2L4' T8 28w/ELEE LO/NEW-8'	4	0.2	3,640	OCC SENSOR WALLSWITCH	1	183
IN	3367	Schuyler-Colfax-Mi	Bath 146Gt	1	4L4' T8 32w/EL	4	0.4	2L4' T8 28w/ELEE HI/RFL	4	0.3	3,640	OCC SENSOR CEIL DT 1GAN	1	280
IN	3368	Schuyler-Colfax-Mi	Bath 146Gt	1	2L2' T8 17w/EL	4	0.1	2L2' T8 15w/ELEE LO/NEW	4	0.1	3,640	INCLUDED ABOVE		105
IN	3369	Schuyler-Colfax-Mi	Bldg Mt Fixture 1	ext	250W HI PRESSURE SOD	3	0.9	133 WATT LED/NEW	3	0.4	4,380	NO RETRO		
IN	3370	Schuyler-Colfax-Mi	Bldg Mt Fixture 2	ext	50W HI PRESSURE SODI	1	0.1	26 WATT LED/NEW	1	0.0	4,380	NO RETRO		
IN	3371	Schuyler-Colfax-Mi	Bldg Mt Fixture 3	ext	50W HI PRESSURE SODI	13	0.8	26 WATT LED/NEW	13	0.3	4,380	NO RETRO		
IN	3372	Schuyler-Colfax-Mi	Bldg Mt Fixture 4	ext	50W HI PRESSURE SODI	3	0.2	26 WATT LED/NEW	3	0.1	4,380	NO RETRO		
IN	3373	Schuyler-Colfax-Mi	Bldg Mt Fixture 5	ext	2x150W INCANDESCENT	2	0.6	49 WATT LED/NEW	2	0.1	4,380	NO RETRO		
IN	3374	Schuyler-Colfax-Mi	Bldg Mt Fixture 6	ext	150W HI PRESSURE SOD	1	0.2	70 WATT LED/NEW	1	0.1	4,380	NO RETRO		
IN	3375	Schuyler-Colfax-Mi	Bldg Mt Fixture 7	ext	50W LO VOLT INC HALOG	4	0.2	NO RETRO		0.2	4,380	NO RETRO		
IN	3376	Schuyler-Colfax-Mi	Bldg Mt Fixture 8	ext	60W INCANDESCENT	4	0.2	11W COMPACT SI/29708/CF11I	4	0.0	4,380	NO RETRO		

Appendix for ECM 2: Lighting Controls

II. Manufacturer Specification Sheets

"Page content is subject to Confidentiality Restrictions"

This page is intentionally left blank.

sensorswitch®

WSD

WALL SWITCH DECORATOR SENSOR
LINE VOLTAGE • PASSIVE INFRARED (PIR)

SPECIFICATIONS

FEATURES
- PIR Occupancy Detection
- Self-Contained Relay - No Power Pack Needed
- Interchangeable Hot & Load Wires - Impossible to Wire Backwards
- No Neutral Connection Required
- Small Motion Detection to 20 ft (6.10 m)
- Self-Grounding Mounting Strap
- No Minimum Load
- Push-Button Programmable w/o Removing the Switch Plate
- Adjustable Time Delay
- 3-way & 4-way Switching
- Green LED Indicator

PHYSICAL SPECS
- SIZE 4.2"H x 1.8"W x 1.5"D (10.67cm x 4.57cm x 3.81cm)
- WEIGHT 5 oz
- MOUNTING Single Gang Switch Box
- MOUNTING HEIGHT 30-48 in (76.2-121.9 cm)
- COLORS White, Ivory, Gray Almond, Black

ELECTRICAL SPECS
- MAXIMUM LOAD
  - 800 W @ 120 VAC
  - 1200 W @ 277 VAC
  - 1500 W @ 347 VAC
- MINIMUM LOAD None
- MOTOR LOAD 1/4 HP
- FREQUENCY 50/60 Hz (timers are 1.2x for 50 Hz)

ENVIRONMENTAL SPECS
- OPERATING TEMP 14° to 160° F (-10° to 71° C)
- STORAGE TEMP -14° to 160° F (-26° to 71° C)
- RELATIVE HUMIDITY 20 to 90% non-condensing

OTHER
- UL and CUL Listed
- Title 24 Compliant
- 5 Year Warranty
- Made in the U.S.A.

The **WSD** is a stylish, easy to install, and simple to use Wall Switch Decorator style Passive Infrared (PIR) sensor. It is ideal for private offices, copy rooms, closets, or any small enclosed space without obstructions. A user programmable time delay ensures that once the room is vacated the sensor will time out and turn off the lights. Additionally, the **WSD** sensor has several On Modes and Switch Modes that can be programmed using the front push-button. For rooms with obstructions, the Dual Technology **WSD PDT** Series sensor is recommended.

SENSOR OPERATION & MODES

The sensor detects changes in the infrared energy given off by occupants as they move within the field-of-view. When occupancy is detected, a self-contained relay switches the connected lighting load on. The sensor is line powered and switches line voltage (see specifications). A timer, factory set at 10 minutes, keeps the lights on during brief periods of inactivity. This timer is push-button programmable from 30 seconds to 20 minutes, and resets every time occupancy is re-detected. This state-of-the-art design requires no field calibration or sensitivity adjustments.

ON MODES

AUTOMATIC ON (default) - Lights come on when occupancy is detected.

MANUAL ON - Requires the occupant manually turn on lights via the push-button.

REDUCED TURN ON - Sensor is initially set to only detect large motions, effectively ignoring PIR signals reflected off of surfaces, while still sensing occupants when they enter the room. Once lights are on, the sensor returns to maximum sensitivity.

SWITCH MODES

PREDICTIVE OFF MODE (default) - This mode allows occupants to turn lights off via the switch without losing the convenience of having the lights automatically turn on when they re-enter the room. Pressing the switch turns the lights off and temporarily disables the occupancy detection in the sensor. After a short exit time delay, the occupancy detection reactivates and monitors for an additional grace period. If no occupancy is detected, the zone will remain in Automatic On operation. If occupancy is detected, the zone will go to a Permanent Off mode, requiring the switch to be pressed again in order to turn the lights on and restore the sensor to Automatic On operation.

PERMANENT OFF - Pressing the switch turns the lights and the sensor off. Lights will not come on until switch is pressed again.

SWITCH DISABLE - Prevents user from manually turning off the lights via the push-button. Button can still be utilized for programming.

OPTIONS

VANDAL-RESISTANT LENS (V)
- Ideal for high abuse or public areas, where occupants simply come and go
- Decreases detection range by 50%

INHIBIT PHOTOCELL (P)
- Auto set-point calibration
- Photocell prevents lights from turning on if adequate daylight is available, but does not turn lights off

347 VAC (347)
- Allows sensor to be powered from and switch 347 VAC
- Wall Plate Provided

COLOR
- White, Ivory, Gray, Almond, Black
- Wall Plate Provided

LOW TEMP/HIGH HUMIDITY (LT)
- Sensor is corrosion resistant
- Operates down to -40° F/C

ORDERING INFO

WSD [LENS] [PHOTOCELL] [VOLTAGE] [COLOR] [TEMP/HUMIDITY]

LENS	PHOTOCELL	VOLTAGE	COLOR	TEMP/HUMIDITY
Blank = None	Blank = None	Blank = 120/277 VAC	WH = White	Blank = Standard
V = Vandal Resistant	P = Photocell	347 = 347 VAC	IV = Ivory	LT = Low Temp
			GY = Gray	
			AL = Almond	
			BK = Black	

sensorswitch

WSD 2P

WALL SWITCH DECORATOR SENSOR
LINE VOLTAGE • 2-POLE • PASSIVE INFRARED (PIR)

SPECIFICATIONS

FEATURES
- PIR Occupancy Detection
- Two Self-Contained Relays - No Power Packs Needed
- 1st Pole Auto-On, 2nd Pole Manual-On
- Interchangeable Hot & Load Wires - Impossible to Wire Backwards
- No Neutral Connection Required
- Small Motion Detection to 20 ft (6.10 m)
- Self-Grounding Mounting Strap
- No Minimum Load
- Adjustable Time Delay / Pole
- Replaces Two Switches at Once
- Push-Button Programmable w/o Removing the Switch Plate
- Green LED Indicator

PHYSICAL SPECS

SIZE (not including mounting strap)
2.74"H x 1.68"W x 1.63"D
(6.96cm x 4.27cm x 4.14cm)
WEIGHT 5 oz
MOUNTING Single Gang Switch Box
MOUNTING HEIGHT 30-48 in
(76.2-121.9 cm)
COLORS White, Ivory, Gray, Almond, Black

ELECTRICAL SPECS

MAXIMUM LOAD / POLE
800 W @ 120 VAC
1200 W @ 277 VAC
1500 W @ 347 VAC
MINIMUM LOAD None
MOTOR LOAD 1/4 HP
FREQUENCY 50/60 Hz
(timers are 1.2x for 50 Hz)

ENVIRONMENTAL SPECS

OPERATING TEMP
14º to 160º F (-10º to 71º C)
STORAGE TEMP
-14º to 160º F (-26º to 71º C)
RELATIVE HUMIDITY
20 to 90% non-condensing

OTHER
- UL and CUL Listed
- Title 24 Compliant
- 5 Year Warranty
- Made in the U.S.A.

The **WSD 2P** Series is a Wall Switch Decorator style Passive Infrared (PIR) sensor designed to control two independent loads. Utilizing two isolated power relays, the **WSD 2P** is factory set to automatically turn load 1 on when initial occupancy is detected while holding load 2 off until the push-button is pressed. Although perfect for rooms wired for bi-level lighting, the **WSD 2P** is also convenient for controlling multiple load types and/or voltages (for example a restroom light and fan). For rooms with obstructions, the Dual Technology **WSD PDT 2P** should be used. Additionally, the settings of the **WSD 2P** Series sensors can be programmed, without removing the switch plate, by entering simple command sequences via the push-button.

SENSOR OPERATION

The sensor detects changes in the infrared energy given off by occupants as they move within the field-of-view. When occupancy is detected, the 1st Pole's relay will switch on the connected load. The 2nd Pole's relay can be switched on by pressing the units push-button. The sensor is line powered and switches line voltage (see specifications). Two timers, each factory set at 10 minutes, keep the lights on during brief periods of inactivity. These timers are each push-button programmable from 30 seconds to 20 minutes, and are reset every time occupancy is re-detected. This state-of-the-art design requires no field calibration or sensitivity adjustments.

OPTIONS

VANDAL-RESISTANT LENS (V)
- Ideal for high abuse or public areas, where occupants simply come and go
- Decreases detection range by 50%

PHOTOCELL (P)
- Auto set-point calibration
- Maintains two set-points, enabling separate control of both poles
- Photocell prevents lights from turning on if adequate daylight is available, but does not turn lights off

347 VAC (347)
- Allows sensor to be powered from and switch 347 VAC
- Wall plate provided

COLOR
- White, Ivory, Gray, Almond, Black
- Wall plate provided
- Must be specified

LOW TEMP/HIGH HUMIDITY (LT)
- Sensor is corrosion resistant
- Operates down to -40º F/C

ORDERING INFO

WSD 2P [LENS] [PHOTOCELL] [VOLTAGE] [COLOR] [TEMP/HUMIDITY]

LENS	PHOTOCELL	VOLTAGE	COLOR	TEMP/HUMIDITY
Blank = None	Blank = None	Blank = 120/277 VAC	WH = White	Blank = Standard
V = Vandal Resistant	P = Photocell	347 = 347 VAC	IV = Ivory	LT = Low Temp
			GY = Gray	
			AL = Almond	
			BK = Black	

WSD PDT

WALL SWITCH DECORATOR SENSOR
LINE VOLTAGE • PASSIVE DUAL TECHNOLOGY (PDT)

SPECIFICATIONS

FEATURES
- Patented Dual Technology with PIR / Microphonics™ Detection
- Self-Contained Relay - No Power Pack Needed
- Interchangeable Hot & Load Wires - Impossible to Wire Backwards
- No Neutral Connection Required
- Small Motion Detection to 20 ft (6.10 m)
- Self-Grounding Mounting Strap
- No Minimum Load
- Push-Button Programmable w/o Removing the Switch Plate
- Adjustable Time Delay
- 3-way & 4-way Switching
- Green LED Indicator

PHYSICAL SPECS
- SIZE 4.2"H x 1.8"W x 1.5"D (10.67cm x 4.57cm x 3.81cm)
- WEIGHT 5 oz
- MOUNTING Single Gang Switch Box
- MOUNTING HEIGHT 30-48 in (76.2-121.9 cm)
- COLORS White, Ivory, Gray, Almond, Black

ELECTRICAL SPECS
- MAXIMUM LOAD
  - 800 W @ 120 VAC
  - 1200 W @ 277 VAC
  - 1500 W @ 347 VAC
- MINIMUM LOAD None
- MOTOR LOAD 1/4 HP
- FREQUENCY 50/60 Hz (timers are 1.2x for 50 Hz)

ENVIRONMENTAL SPECS
- OPERATING TEMP 14º to 160º F (-10º to 71º C)
- STORAGE TEMP -14º to 160º F (-26º to 71º C)
- RELATIVE HUMIDITY 20 to 90% non-condensing

OTHER
- UL and CUL Listed
- Title 24 Compliant
- 5 Year Warranty
- Made in the U.S.A.

The **WSD PDT** Series is a Wall Switch Decorator style Passive Dual Technology (PDT) occupancy sensor. The combination of Passive Infrared and patented Microphonics™ detection allows this sensor to literally see & hear occupants. It is ideal for restrooms with stalls, private offices where occupant turns their back to the sensor, or rooms with obstructions.

SENSOR OPERATION & MODES

Passive Dual Technology (PDT) sensors first see motion using Passive Infrared (PIR) and then engage Microphonics™ to hear sounds that indicate continued occupancy. This patented technology uses Automatic Gain Control (AGC) to dynamically self-adapt a sensor to its environment by filtering out constant background noise and detecting only noises typical of human activity. When occupancy is detected, a self-contained relay switches the connected lighting load on. The sensor is line powered and can switch line voltage (see specifications). A timer, factory set at 10 minutes, keeps the lights on during brief periods of inactivity. This timer is push-button programmable from 30 seconds to 20 minutes, and is reset every time occupancy is re-detected. If needed, a 10 second grace period also allows the lights to be voice reactivated after shutting off. This state-of-the-art design requires no field calibration or sensitivity adjustments.

ON MODES

AUTOMATIC ON (default) - Lights come on when occupancy is detected.

MANUAL ON - Requires the occupant manually turn on lights via the push-button.

REDUCED TURN ON - Sensor is initially set to only detect large motions, effectively ignoring PIR signals reflected off of surfaces, while still sensing occupants when they enter the room. Once lights are on, the sensor returns to maximum sensitivity.

SWITCH MODES

PREDICTIVE OFF MODE (default) - This mode allows occupants to turn lights off via the switch without losing the convenience of having the lights automatically turn on when they re-enter the room. Pressing the switch turns the lights off and temporarily disables the occupancy detection in the sensor. After a short exit time delay, the occupancy detection reactivates and monitors for an additional grace period. If no occupancy is detected, the zone will remain in Automatic On operation. If occupancy is detected, the zone will go to a Permanent Off mode, requiring the switch to be pressed again in order to turn the lights on and restore the sensor to Automatic On operation.

PERMANENT OFF - Pressing the switch turns the lights and the sensor off. Lights will not come on until switch is pressed again.

SWITCH DISABLE - Prevents user from manually turning off the lights via the push-button. Button can still be utilized for programming.

OPTIONS

VANDAL-RESISTANT LENS (V)
- Ideal for high abuse or public areas, where occupants simply come and go
- Decreases detection range by 50%

INHIBIT PHOTOCELL (P)
- Auto set-point calibration
- Photocell prevents lights from turning on if adequate daylight is available, but does not turn lights off

347 VAC (347)
- Allows sensor to be powered from and switch 347 VAC
- Wall Plate Included

COLOR
- White, Ivory, Gray, Almond, Black
- Wall Plate Included

LOW TEMP/HIGH HUMIDITY (LT)
- Sensor is corrosion resistant
- Operates down to -4º F(-20ºC)

ORDERING INFO

WSD PDT [LENS] [PHOTOCELL] [VOLTAGE] [COLOR] [TEMP/HUMIDITY]

LENS	PHOTOCELL	VOLTAGE	COLOR	TEMP/HUMIDITY
Blank = None	Blank = None	Blank = 120/277 VAC	WH = White	Blank = Standard
V = Vandal Resistant	P = Photocell	347 = 347 VAC	IV = Ivory	LT = Low Temp
			GY = Gray	
			AL = Almond	
			BK = Black	

sensorswitch®

CM 10

EXTENDED RANGE 360º SENSOR
CEILING MOUNT • LOW VOLTAGE • PASSIVE INFRARED (PIR)

SPECIFICATIONS

FEATURES
PIR Occupancy Detection
360º Coverage
Push-Button Programmable
Adjustable Time Delay
100 Hr Lamp Burn-in Timer
Green LED Indicator

PHYSICAL SPECS
SIZE 4.55" Dia. (11.56 cm)
1.55" Deep (3.94 cm)
WEIGHT 6 oz
MOUNTING
Ceiling Tile Surface
3.5" Octagon Box
Single Gang Handy Box
COLOR White

ELECTRICAL SPECS
OPERATING VOLTAGE
12-24 VAC/VDC
CURRENT DRAW
Standard, 4 mA
w/ -R option, 16 mA
DIMMING LOAD
Sinks / Sources < 20mA;
~40 Ballasts @ .5mA each
RECOMMENDED POWER PACK
PP20

ENVIRONMENTAL SPECS
OPERATING TEMP
14º to 160º F (-10º to 71º C)
STORAGE TEMP
-14º to 160º F (-26º to 71º C)
RELATIVE HUMIDITY
20 to 90% non-condensing

OTHER
UL and CUL Listed
Title 24 Compliant
5 Year Warranty
Made in the U.S.A.

The **CM 10** Series Extended Range 360º occupancy sensor incorporates Passive Infrared (PIR) technology into an attractive and economical sensor to provide maximum viewing from the ceiling. When mounted at 9 ft (2.74 m), this sensor views up to 28 ft (8.53 m) in all directions. Its circular coverage pattern is designed for walking motions; making it ideal for T-shaped intersections in corridors, or other areas where wall mounting a sensor is not practical. A long hallway, for example, may require a **HW13** Series Hallway sensor at each end, with **CM 10**'s mounted in the center to fill in the distance. Low ceiling heights are also best covered by the **CM 10**. For example, when mounted at only 7 ft (2.13 m), the height of pick aisles in many distribution centers, the **CM 10** provides a 32 ft (9.75 m) diameter pattern of coverage. In applications where detection of minor motion is also required, use the **CM PDT 10** Series Dual Technology sensor.

SENSOR OPERATION
The sensor detects changes in the infrared energy given off by occupants as they move within the field-of-view. When occupancy is detected, a DC output goes high and can drive up to 200 mA of connected load. The sensor is powered with 12-24 VAC/VDC and typically operates with a **PP20** or **MP20** power pack, enabling complete 20 Amp circuits to be controlled. An internal timer, factory set at 10 minutes, keeps the lights on during brief periods of inactivity. This timer is push-button programmable from 30 seconds to 20 minutes, and is reset every time occupancy is re-detected. This state-of-the-art design requires no field calibration or sensitivity adjustments.

OPTIONS

LOW VOLTAGE RELAY (R)
- Enables sensors to interface with other systems (e.g., BMS, lighting panels)
- Provides dry contact closure via a SPDT, 1 Amp, 40 Volt relay
- Only one relay needed per zone
- Changes state when all connected sensors register unoccupied
- Relay requires sensor power to function

OCCUPANCY CONTROLLED DIMMING (D)
- Provides dimming output to control 0-10 VDC dimmable ballasts
- Provides a second occupancy time-out period that enables the lights to go to a dim setting before turning off
- Adjustable max/min dim setting

PHOTOCELL (P)
- Auto set-point calibration
- Two selectable modes of operation
- On/Off mode: Photocell has full control during periods of occupancy
- Inhibit mode: Photocell can prevent lights from turning on if adequate daylight is available, but cannot turn lights off

PHOTOCELL W/ DIMMING (ADC)
- Photocell within sensor maintains total room light level by controlling levels of 0-10 VDC dimmable ballasts
- Photocell also has full on/off control during periods of occupancy
- Provides a second occupancy time-out period that enables the lights to go to a dim setting before turning off

LOW TEMP/HIGH HUMIDITY (LT)
- Sensor is corrosion resistant to moisture
- Operates down to -40º F/C

ORDERING INFO

CM 10 [RELAY] [DIMMING/PHOTOCELL] [TEMP/HUMIDITY]

RELAY
Blank = None
R = Low Voltage Relay

DIMMING / PHOTOCELL *CHOOSE ONE ONLY*
Blank = None
D = Occupancy Controlled Dimming
P = Photocell
ADC = Photocell w/ Dimming

TEMP/HUMIDITY
Blank = Standard
LT = Low Temp

CM PDT 10

EXTENDED RANGE 360º SENSOR
CEILING MOUNT • LOW VOLTAGE • DUAL TECHNOLOGY (PDT)

SPECIFICATIONS

FEATURES
- Patented Dual Technology with PIR / Microphonics Detection
- 360º Coverage
- Push-Button Programmable Adjustable Time Delay
- 100 Hr Lamp Burn-in Timer
- Green LED Indicator

PHYSICAL SPECS
- SIZE 4.55" Dia. (11.56 cm) 1.55" Deep (3.94 cm)
- WEIGHT 6 oz
- MOUNTING
  - Ceiling Tile Surface
  - 3.5" Octagon Box
  - Single Gang Handy Box
- COLOR White

ELECTRICAL SPECS
- OPERATING VOLTAGE
  - 12-24 VAC/VDC
- CURRENT DRAW
  - Standard, 4 mA
  - w/ -R option, 16 mA
- DIMMING LOAD
  - Sinks / Sources < 20mA; ~40 Ballasts @ .5mA each
- RECOMMENDED POWER PACK
  - PP20

ENVIRONMENTAL SPECS
- OPERATING TEMP
  - 14º to 160º F (-10º to 71º C)
- STORAGE TEMP
  - -14º to 160º F (-26º to 71º C)
- RELATIVE HUMIDITY
  - 20 to 90% non-condensing

OTHER
- UL and CUL Listed
- Title 24 Compliant
- 5 Year Warranty
- Made in the U.S.A.

Classrooms are ideal applications for the **CM PDT 10** Series Extended Range 360º occupancy sensor. When mounted at 9 ft (2.74 m), this sensor provides line of sight Passive Infrared (PIR) detection of walking type motions up to 28 ft (8.53 m) in all directions. Additionally, the **CM PDT 10** provides overlapping Microphonics™ technology to detect smaller motions and occupant movements that occur behind obstructions. This is important for classrooms filled with obstructions like shelving, hanging projects, or lab benches. When comparing small motion detection, the **CM PDT 10** far out performs dual technology sensors on the market that are specified with 2,000 ft^2 of coverage. Spaces with low ceiling heights are also best covered by the **CM PDT 10**. For example, when mounted at the 7 ft (2.13 m) ceiling height of many distribution center pick aisles, the **CM PDT 10** provides a 32 ft (9.75 m) diameter pattern of coverage. Additionally, the **CM PDT 10** may be used in combination with other sensors to customize coverage for very large or irregularly shaped spaces.

SENSOR OPERATION

The sensor has Passive Dual Technology (PDT), which first sees motion using Passive Infrared (PIR), and then engages Microphonics™ to hear sounds that indicate continued occupancy. This patented technology uses Automatic Gain Control (AGC) to dynamically self-adapt the sensor to its environment by filtering out constant background noise and detecting only noises typical of human activity. When occupancy is detected, a DC output goes high and can drive up to 200 mA of connected load. The sensor is powered with 12-24 VAC/VDC and typically operates with a **PP20** or **MP20** power pack, enabling complete 20 Amp circuits to be controlled. An internal timer, factory set at 10 minutes, keeps the lights on during brief periods of inactivity. This timer is push-button programmable from 30 seconds to 20 minutes, and is reset every time occupancy is re-detected. This state-of-the-art sensor requires no field calibration or adjustment.

OPTIONS

LOW VOLTAGE RELAY (R)
- Enables sensors to interface with other systems (e.g., BMS, lighting panels)
- Provides dry contact closure via a SPDT, 1 Amp, 40 Volt relay
- Only one relay needed per zone
- Changes state when all connected sensors register unoccupied
- Relay requires sensor power to function

OCCUPANCY CONTROLLED DIMMING (D)
- Provides dimming output to control 0-10 VDC dimmable ballasts
- Provides a second occupancy time-out period that enables the lights to go to a dim setting before turning off
- Adjustable max/min dim setting

PHOTOCELL (P)
- Auto set-point calibration
- Two selectable modes of operation
- On/Off mode: Photocell has full control during periods of occupancy
- Inhibit mode: Photocell can prevent lights from turning on if adequate daylight is available, but cannot turn lights off

PHOTOCELL W/ DIMMING (ADC)
- Photocell within sensor maintains total room light level by controlling levels of 0-10 VDC dimmable ballasts
- Photocell also has full on/off control during periods of occupancy
- Provides a second occupancy time-out period that enables the lights to go to a dim setting before turning off

LOW TEMP/HIGH HUMIDITY (LT)
- Sensor is corrosion resistant to moisture
- Operates down to -4º F/ 20º C

ORDERING INFO

CM PDT 10 [RELAY] [DIMMING/PHOTOCELL] [TEMP/HUMIDITY]

RELAY

Blank = None
R = Low Voltage Relay

DIMMING / PHOTOCELL *CHOOSE ONE ONLY*

Blank = None
D = Occupancy Controlled Dimming
P = Photocell
ADC = Photocell w/ Dimming

TEMP/HUMIDITY

Blank = Standard
LT = Low Temp

sensorswitch®

CMR 10 2P

EXTENDED RANGE 360º SENSOR
CEILING MOUNT • LINE VOLTAGE • PASSIVE INFRARED (PIR) • 2 POLE

SPECIFICATIONS

FEATURES

100% Digital PIR Detection,
Excellent RF Immunity
360º Coverage Pattern
Two Self-Contained Relays,
No Power Pack(s) Needed
No Minimum Load Requirements
Interchangeable Hot & Load Wires,
Impossible to Wire Backwards
Push-Button Programmable
Adjustable Time Delays
No Field Calibration or Sensitivity
Adjustments Required
Convenient Test Mode
100 hr Lamp Burn-in Timer
Green LED Indicator

LAMPMAXIMIZER® TECHNOLOGY
- Protects Lamp Life while Maximizing Energy Savings
- Minimum On Timer (15 min default)
- Occ. Time Delay (10 min defatult)

PHYSICAL SPECS

SIZE 4.55” Dia. (11.56 cm)
1.55” Deep (3.94 cm)
WEIGHT 6 oz
MOUNTING
3.5” Octagon Box
Single Gang Handy Box
COLOR White

ELECTRICAL SPECS

MAXIMUM LOAD / POLE
(1 Phase Only)
800 W @ 120 VAC
1200 W @ 277 VAC
1500 W @ 347 VAC
MINIMUM LOAD None
MOTOR LOAD 1/4 HP
FREQUENCY 50/60 Hz

ENVIRONMENTAL SPECS

OPERATING TEMP
14º to 160º F (-10º to 71º C)
STORAGE TEMP
-14º to 160º F (-26º to 71º C)
RELATIVE HUMIDITY
20 to 90% non-condensing
SILICONE FREE
ROHS COMPLIANT

OVERVIEW

Corridors with A/B switching are ideal for the **CMR 10 2P** Passive Infrared 2-Pole occupancy sensor. At a 9 ft (2.74 m) height, this sensor views up to 28 ft (8.53 m) in all directions. Ideal for applications where each fixture is controlled with inboard/outboard switch legs and low voltage wiring is not practical; these sensors connect directly to line voltage without the need of a power pack. Universal mounting allows for 3.5” octagon boxes, wiremold, or standard mud rings. In cold damp environments, the **CMR 10 2P LT** version should be used.

SENSOR OPERATION

The sensor detects changes in the infrared energy given off by occupants as they move within the field-of-view. When occupancy is detected, two self-contained relays switch the connected lighting loads on. The sensor is line powered, switches line voltage, and requires no field calibration or sensitivity adjustments.

LAMPMAXIMIZER®

This sensor also contains patent pending LampMaximizer technology that allows users to aggressively target energy savings while still protecting lamp life. A minimum on timer, factory set at 15 minutes, helps preserve lamp life by eliminating all lamp cycles shorter than lamp warranties specify.

A standard occupancy time delay is also present that ensures lights turn off (assuming minimum on timer has elapsed) if no occupancy is detected. This timer is factory set at 10 minutes to promote energy savings, but is adjustable between 30 seconds and 20 minutes. These adjustments are done manually through the unit’s push-button; no tools required.

OPTIONS

INHIBIT PHOTOCELL (P)
- Photocell can prevent lights from turning on if adequate daylight is available, but cannot turn lights off
- Maintains two set-points, enabling separate control of both poles

DUAL ZONE PHOTOCELL (DZ)
- Provides more advanced control than **P** option
- DUO Operation: Determines necessary on/off combination of poles in inboard/outboard applications
- Percentage Offset Operation: Uses relative set-point for second pole in dual zone applications

347 VAC (347)
- Allows sensor to be powered from and switch 347 VAC

LOW TEMP/HIGH HUMIDITY (LT)
- Sensor is corrosion resistant to moisture
- Operates down to -40º F/C

c UL US LISTED

TITLE 24
MADE in U.S.A.
5 YEAR WARRANTY

ORDERING INFO

CMR 10 2P [PHOTOCELL] [VOLTAGE] [TEMP/HUMIDITY]

PHOTOCELL *CHOOSE ONE ONLY*

Blank = None
P = Inhibit Photocell
DZ = Dual Zone Photocell

VOLTAGE

Blank = 120/277 VAC
347 = 347 VAC

TEMP/HUMIDITY

Blank = Standard
LT = Low Temp

sensorswitch®

WV 16

WIDE VIEW SENSOR
CORNER MOUNT • LOW VOLTAGE • PASSIVE INFARED (PIR)

SPECIFICATIONS

FEATURES
- PIR Occupancy Detection
- 120° by 40 ft (12.19 m) Coverage for Small Motion
- Adjustable Time Delay
- 100 Hr. Lamp Burn-In Timer Mode
- Green LED Indicator

PHYSICAL SPECS
- SIZE 3.0" H x 3.6" W x 1.75" D (7.62 cm x 9.14 cm x 4.45 cm)
- WEIGHT 5 oz
- MOUNTING Directly to corner or to ceiling using **WV BR** bracket.
- COLOR White

ELECTRICAL SPECS
- OPERATING VOLTAGE 12-24 VAC/VDC
- CURRENT DRAW Standard, 4 mA w/ **R** option, 16 mA
- RECOMMENDED POWER PACK PP20

ENVIRONMENTAL SPECS
- OPERATING TEMP 14° to 160° F (-10° to 71° C)
- STORAGE TEMP -14° to 160° F (-26° to 71° C)
- RELATIVE HUMIDITY 20 to 90% non-condensing

OTHER
- UL and CUL Listed
- Title 24 Compliant
- 5 Year Warranty
- Made in the U.S.A.

The **WV 16** Series Wide View occupancy sensor is designed to mount in a corner and detect small motions up to 40 ft (12.19 m) away, and larger motions up to 70 ft (21.34 m) away. This makes it ideal for 30 ft x 30 ft (9.14 m x 9.14 m) classrooms or corridors up to 70 ft (21.34 m) long (for specific long narrow hallway applications, see **HW13** product data sheet). The enclosure's convenient tilting feature enables the sensor to be mounted at any height from 8 to 10 ft (2.44 to 3.05 m). When corner or wall mounting is not possible, the **WV BR** bracket accessory can be used to mount the **WV 16** to the ceiling. Additionally, the **WV 16** may be used in combination with other sensors to customize coverage for very large or irregularly shaped spaces. For rooms with obstructions, use the **WV PDT 16** Series sensor which adds Microphonics™ detection.

SENSOR OPERATION

The sensor detects changes in the infrared energy given off by occupants as they move within the field-of-view. When occupancy is detected, a DC output goes high and can drive up to 200 mA of connected load. The sensor is powered with 12-24 VAC/VDC and typically operates with a **PP20** or **MP20** power pack, enabling complete 20 Amp circuits to be controlled. An internal timer, factory set at 10 minutes, keeps the lights on during brief periods of inactivity. This timer is push-button programmable from 30 seconds to 20 minutes, and is reset every time occupancy is re-detected. This state-of-the-art design requires no field calibration or sensitivity adjustments.

OPTIONS

LOW VOLTAGE RELAY (R)
- Enables low voltage sensors to interface with other systems
- Provides dry contact closure via a SPDT, 1 Amp, 40 Volt relay.
- Only one relay needed per zone
- Changes state when all connected sensors register unoccupied
- Relay requires sensor power to function

PHOTOCELL (P)
- Auto set-point calibration
- Two selectable modes of operation
- On/Off mode: Photocell has full control during periods of occupancy
- Inhibit mode: Photocell can prevent lights from turning on if adequate daylight is available, but cannot turn lights off

LOW TEMP/HIGH HUMIDITY (LT)
- Sensor is corrosion resistant to moisture
- Operates down to -40° F/C

ORDERING INFO

WV 16 [RELAY] [PHOTOCELL] [TEMP/HUMIDITY]

RELAY	PHOTOCELL	TEMP/HUMIDITY
Blank = None	Blank = None	Blank = Standard
R = Low Voltage Relay	P = Photocell	LT = Low Temp

sensorswitch

CMRB 6

HIGH BAY 360º SENSOR
FIXTURE MOUNT BOX • LINE VOLTAGE • PASSIVE INFRARED (PIR)

SPECIFICATIONS

FEATURES
- PIR Occupancy Detection
- Up to 45 ft (13.72 m) Mounting
- 360º Coverage
- Self-Contained Relay Switches
  - Line Voltage Load
- No Minimum Load Requirements
- Push-Button Programmable Adjustable Time Delay
- 100 Hr Lamp Burn-in Timer
- Green LED Indicator

PHYSICAL SPECS
- SIZE 3.63" H x 3.63" W x 1.50" D (9.22 cm x 9.22 cm x 3.81 cm)
- WEIGHT 6 oz
- MOUNTING 1/2" knockout
- COLOR White

ELECTRICAL SPECS
- MAXIMUM LOAD
  - 800 W @ 120 VAC
  - 1200 W @ 277 VAC
  - 1500 W @ 347 VAC
- MINIMUM LOAD None
- MOTOR LOAD 1/4 HP
- FREQUENCY 50/60 Hz
- DIMMING LOAD
  - Sinks / Sources < 20mA; ~40 Ballasts @ .5mA each

ENVIRONMENTAL SPECS
- OPERATING TEMP
  - 14º to 160º F (-10º to 71º C)
- STORAGE TEMP
  - -14º to 160º F (-26º to 71º C)
- RELATIVE HUMIDITY
  - 20 to 90% non-condensing

OTHER
- UL and CUL Listed
- Title 24 Compliant
- 5 Year Warranty
- Made in the U.S.A.

Designed for mounting heights of up to 45 ft (13.72 m), the **CMRB 6** High Bay 360º sensor provides Passive Infrared (PIR) occupancy detection over a 15-20 ft (4.57-6.10 m) radial coverage pattern that overlaps the areas lit by a typical high bay fixture. This line voltage sensor switches loads directly without the need for a power pack. The **CMRB 6** sensor mounts directly to the end of a lighting fixture through an extended 1/2 inch chase nipple, and is ideal for individual on/off control of T5/T8 fluorescent lighting. HID bi-level fixtures can also be controlled when the Start-to-High (SH) option is added to the **CMRB 6**. For multiple fixture control, multiple low voltage **CMB 6**, **CMB 50**, and/or **HMB 10** Series High Bay sensors with power packs are recommended. For lower mounting height applications, **CMRB 9** or **CMRB 10** Series sensors are recommended.

SENSOR OPERATION

The sensor detects changes in the infrared energy given off by occupants as they move within the field-of-view. When occupancy is detected, a self-contained relay switches the connected lighting load on. The sensor is line powered and can switch line voltage (see specifications). An internal timer, factory set at 15 minutes, keeps the lights on during brief periods of inactivity. This timer is push-button programmable from 30 seconds to 20 minutes, and is reset every time occupancy is re-detected. This state-of-the-art sensor requires no field calibration or sensitivity adjustments.

OPTIONS

START-TO-HIGH TIMER (SH)
- Upon power up sensor holds lights on and high for 20 min

OCCUPANCY CONTROLLED DIMMING (D)
- Provides dimming outputs to control 0-10 VDC dimmable ballasts
- Provides a second occupancy time-out period that enables the lights to go to a dim setting before turning off
- Adjustable max/min dim setting

PHOTOCELL (P)
- Ideal for high bay applications with skylights
- Photocell looks out through rear of sensor enclosure
- Auto set-point calibration
- Two selectable modes of operation
- On/Off mode: Photocell has full control during periods of occupancy
- Inhibit mode: Photocell can prevent lights from turning on if adequate daylight is available, but cannot turn lights off

DOWN LOOKING PHOTOCELL (PD)
- Ideal for high bay applications with daylight entering space from side windows or bay doors
- Photocell views down through sensor lens
- Auto set-point calibration
- Two selectable modes of operation
- On/Off mode: Photocell has full control during periods of occupancy
- Inhibit mode: Photocell can prevent lights from turning on if adequate daylight is available, but cannot turn lights off

347 VAC (347)
- Allows sensor to be powered from and switch 347 VAC

LOW TEMP/HIGH HUMIDITY (LT)
- Sensor is corrosion resistant to moisture
- Operates down to -40º F/C

ORDERING INFO

CMRB 6 [START-TO-HIGH] [DIMMING] [PHOTOCELL] [VOLTAGE] [TEMP/HUMIDITY]

START-TO-HIGH	DIMMING	PHOTOCELL	VOLTAGE	TEMP/HUMIDITY
Blank = No STH SH = w/STH	Blank= None D = Occupancy Controlled Dimming	Blank= None P= Up Looking Photocell PD= Down Looking Photocell	Blank = 120/277 VAC 347 = 347 VAC	Blank = Standard LT = Low Temp

sensorswitch

120/277 VOLT POWER PACKS AND SLAVE PACKS

PP-20
PP-20-2P
SP-20
Plenum Rated

TYPICAL APPLICATIONS
- Used with Low Voltage Sensors
- Multiple Sensors
- Multiple Loads
- AC Switching Only

HIGHLIGHTS
- Dual Voltage Transformer
- Self-Contained Relay
- Patented Relay Circuit Protection (Tested to over 400,000 cycles)
- Powers up to 14 sensors

SPECIFICATIONS
- Size:(1/2" inch chase nipple not inc.)
  PP-20-2P: $4\frac{1}{8}$ x 3" x $1\frac{7}{8}$"
  PP-20 & SP-20: 3" x $2\frac{1}{4}$" x $1\frac{7}{8}$"
- Mounting: 1/2" inch chase nipple
- Operating Voltage: 120, 240, or 277 VAC (Single Phase only)
- Each Relay: 20 Amps
- 1 HP Motor Load
- Output Voltage: 15 VDC, 150 mA at 120 or 277 VAC
- Class II: 18 AWG, up to 2,000 ft.
- Plenum Rated
- Relative Humidity: 20 to 90% non-condensing
- Operating Temp: 14º to 160º F
- Storage Temp: -14º to 160º F
- UL and CUL Listed
- 5 Year Warranty
- Made in U.S.A.

LOW TEMP/HI HUMIDITY(-LT)
- Conformally Coated PCB
- Operates down to -40º F
- Corrosion resistant from moisture

PLENUM CONSIDERATIONS
Most local codes allow for small plastic controls in Return Air Plenums; *Some Do Not!* To meet local code, the Power Pack can be mounted inside an adjacent (Deep) junction box as shown below.

Power Packs are the heart of the Low Voltage Sensor System. The *PP-20* transforms 120, 240 or 277 Volts (single phase) to class II 15 VDC to power the remote sensors. Utilizing Patented Relay Circuit Protection the *PP-20* also switches the lighting load "On" and "Off": Tested to over 400,000 cycles at rated load! Although Plenum Rated, the elongated mounting nipple allows for the *PP-20* to be mounted either directly thru a 1/2" inch knockout in a junction box, or to be located inside an adjacent box for specific local code requirements. Up to 14 sensors may be connected to one *PP-20*. Multi-circuit control can be handled by multiple *PP-20's*, or 2-Pole Power Packs (*PP-20-2P*) and Slave Packs (*SP-20*) may be configured. *PP-20's* can be wired continuously hot (line side), or on the switch leg (load side) without nuisance delays upon turn "On".

LOW VOLTAGE OPERATION AND TEST
The Low Voltage Wires or Terminal is color coded Red (15 VDC), Black (Common), and White (Occupancy Signal). With no sensors connected, using a small wire, connect the Red terminal to the White. The lights should turn "On". Remove the connection and the lights should turn "Off". With the sensors connected, the Red and Black wires provide DC power to the remote sensors, and when there is occupancy detected, the White wire produces a 15 VDC signal from the sensor to the power pack initiating the lights to "On". Upon initial power up, the Sensors automatically send an "On" signal until the sensors have stabilized and "Timed Out".

SIZING OF THE SYSTEM - VARIOUS COMBINATIONS
Combining Power Packs provides for additional power to drive remote devices. Maximum numbers of remote sensors are shown below based on the Power Pack/Slave Pack being used. *Maximum number of "Relays" is 30.*

	Sensors	Sensors with Relay
1 PP-20	14	8
1 PP-20-2P	7	6
1 PP-20 w/SP-20	7	6
1 PP-20-2P w/SP-20	5	5
2 PP-20	28	16
2 PP-20-2P	14	12

Note 1: Only three relays may be controlled with one Power Pack. If more than three circuits are required, multiple Power Packs must be used.

Note 2: Only one "Sensor with Relay" is required in most cases. See Technical Datasheet on Low Voltage Sensors with -R Interface Option.

SYSTEMS CONSIDERATIONS
The local override switch may be upstream or downstream of a *PP-20*. However, if an *SP-20* Auxiliary Relay or a *PP-20-2P* controller is being used, the switch(es) should be downstream on the load side of the relay. If power is disconnected to the Power Pack all subsequent relays will open, turning off all of the loads. If wiring the local switches before the Power Pack and Slave Pack, use multiple *PP-20's*, one for each circuit. This will allow for one circuit to remain powered, keeping the system operational when the other is turned off. When controlling a dimming circuit, *PP-20* must be wired before dimmer, or *SP-20* may be wired after dimmer.

INTERFACING WITH ELECTRONIC CONTROL SYSTEMS
The Relay Switching System is designed to switch Alternating Currents Only. The relay will not switch DC signal inputs to EMS or Lighting Control Systems. Use model #MP-20, or "-R" for signal relay located in Low Voltage Sensor Heads.

CATALOG INFORMATION

MODEL#	DESCRIPTION	OUTPUT VOLTAGE	OUTPUT CURRENT
PP-20	Power Pack with 20 Amp Relay	15 to 24 VDC	70 to 110 mA
PP-20-2P	Power Pack with two 20 Amp Relays	15 to 24 VDC	35 to 70 mA
SP-20	Slave Pack with 20 Amp Relay	N/A	40 mA (consumption)

**Add suffix -LT for Low Temp/Hi Humidity

COMMERCIAL OCCUPANCY SENSORS & CONTROLS

TS-400 Digital Time Switch

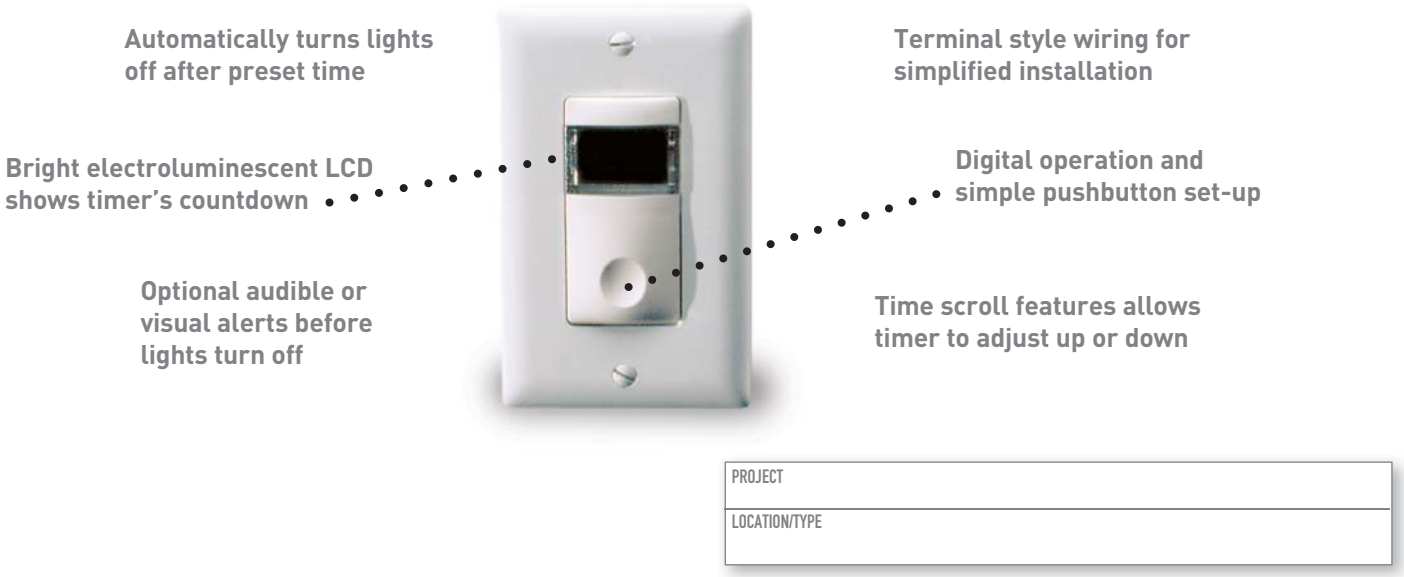

PROJECT

LOCATION/TYPE

Product Overview

Description

The InteliSwitch TS-400 series digital time switches automatically turn lights off after a preset time. The simple pushbutton operation provides users with convenient time out lighting control without the nuisance of twist timers.

Operation

The TS replaces an existing wall switch. The TS-400 operates between 100 and 300 volts. Pressing the TS's on/off button turns lights on. The lights will remain on for the duration of the time-out setting which is adjustable from 5 minutes to 12 hours. Lights can be turned off before the time-out setting expires by pressing the on/off button. Also, the unit can be reset at any time by holding down the on/off button for 2 seconds. This will bring the timer back to its original time out setting and restart the countdown.

Time Scroll Overrides

The time scroll option allows users to temporarily override the time out setting without adjusting the settings. Time scroll is selected with the calibration button. With time scroll programmed to "UP", lights can be held on longer than the time out period. With time scroll programmed to down "DN", lights can be turned off sooner than the time out period. Pressing the on/off switch for more than 4 seconds causes the timer to scroll in the set direction throughout the possible time out settings.

Applications

The TS is an ideal lighting control choice in equipment rooms, storage areas, and closets.

Features

- Time-out settings range from 5 minutes to 12 hours for flexibility in fitting many applications
- Optional flash and beep warnings allow time to reset the switch if someone is present
- Time scroll option provides temporary override of the preset time out period
- Simple reset feature for returning the switch to its original preset time-out setting
- Electroluminescent back-lit LCD shows timer countdown
- Terminal style wiring simplifies installation
- Zero crossing reduces stress on the relay and increases product longevity
- Pushbutton programming gives the TS an easy set up process
- Setting the time-out for 2 hours and time scroll to down allows Title 24 compliance for using override switches
- Qualifies for ARRA-funded public works projects

ELOGIC™ Lighting Controls
Sensor & Control for Daylight Harvesting

elogic™ lighting controls

RetroFriendly™ Series

Compatible Ballast Guide

T8 QUICKTRONIC® POWERSENSE® (100-5% Dimming)
QTP1x32T8/UNV DIM
QTP2x32T8/UNV DIM
QTP3x32T8/UNV DIM
QTP4x32T8/UNV DIM

T5 QUICKTRONIC POWERSENSE (100-1% Dimming)
QTP2x28T5/UNV DIM

T5HO QUICKTRONIC HELIOS™ (100-1% Dimming)
QT1x54/120PHO-DIM
QT1x54/277PHO-DIM
QT2x54/120PHO-DIM
QT2x54/277PHO-DIM

Note: Other vendors' 0-10V dimming ballasts should also work. Contact SYLVANIA for compatibility.

Key System Features

Save Energy Two Ways at Once: Take advantage of the QUICKTRONIC POWERSENSE ballast's ability to be controlled by both the 0-10V daylight sensor and AC line dimming.

ELOGIC LIGHTING CONTROLS FOR DAYLIGHT HARVESTING provide closed-loop daylight harvesting control using the 0-10V port on a dimming ballast.

Fast Way To Save Energy: Simply clip the sensor onto a lamp in the fixture and wire directly to the QUICKTRONIC POWERSENSE or HELIOS ballast using low-voltage wiring. Complete the installation with a single adjustment.

Flexible Wiring: Use one sensor per fixture or share the low voltage dimming signal from one sensor with up to ten ballasts in the same row near the windows.

Save Money on Labor and Materials: The *RetroFriendly* Daylight Sensor requires no power pack when connected to POWERSENSE ballasts.

Ready to Mount: Many fixture configurations allow mounting of the sensor directly to the lamp with either the T8 or T5 clip. If desired, the sensor can mount directly on the fixture surface or ceiling rail or industrial two-sided tape.

Improve Occupant Satisfaction: Governmental studies have shown that occupants are more productive when given personal control over their workspace lighting. Satisfy occupant needs by adding wall controls with AC line dimming.

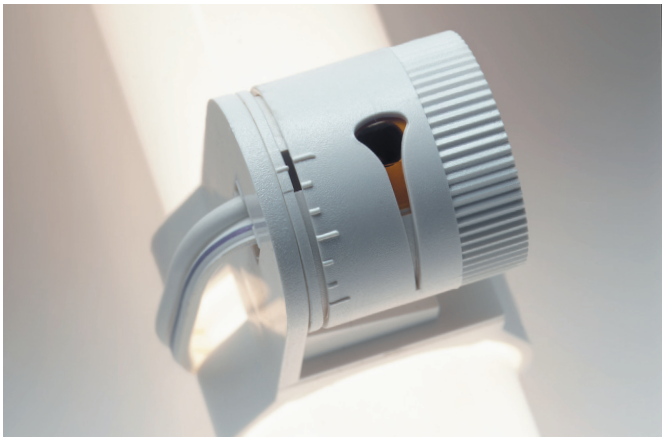

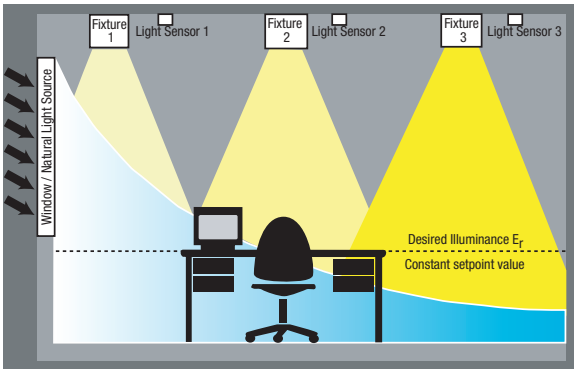

Application Information

ELOGIC Lighting Controls for Daylight Harvesting Controls are ideally suited to achieving energy savings when:

Retrofitting existing fixtures
- mount to lamps

Mixing daylight harvesting energy savings with occupant control:
- add power-line dimmer in wallbox

Typical Wiring Diagram

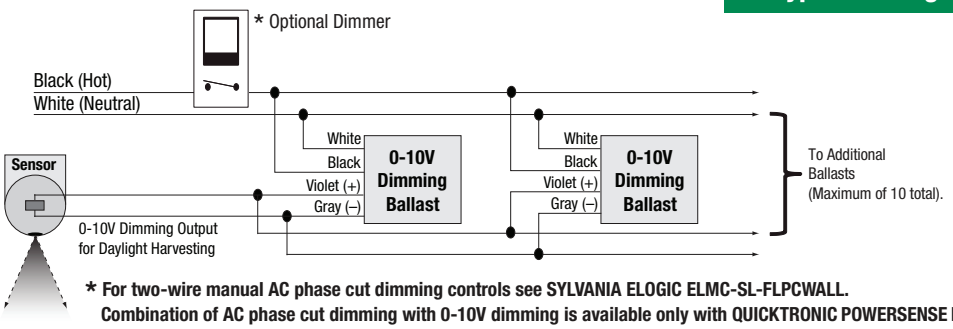

*** For two-wire manual AC phase cut dimming controls see SYLVANIA ELOGIC ELMC-SL-FLPCWALL. Combination of AC phase cut dimming with 0-10V dimming is available only with QUICKTRONIC POWERSENSE Ballasts.**

SEE THE WORLD IN A NEW LIGHT SYLVANIA

Ordering information

Model number	Control type
LRF2-OCRB-P-XX	ceiling-mounted occupancy/vacancy sensor, auto-on/auto-off or manual on/auto-off settings
LRF2-VCRB-P-XX[1]	ceiling-mounted vacancy sensor, manual on/auto-off setting only
LRF2-DCRB-WH	ceiling-mounted daylight sensor
LRF2-OWLB-P-WH[2]	180° wall-mounted occupancy/vacancy sensor, auto-on/auto-off or manual on/auto-off settings
LRF2-VWLB-P-WH[1,2]	180° wall-mounted vacancy sensor, manual on/auto-off setting only
LRF2-OKLB-P-WH[2]	90° wall-mounted occupancy/vacancy sensor, auto-on/auto-off or manual on/auto-off settings
LRF2-VKLB-P-WH[1,2]	90° wall-mounted vacancy sensor, manual on/auto-off setting only
LRF2-OHLB-P-WH[2]	hallway occupancy/vacancy sensor, auto-on/auto-off or manual on/auto-off settings
LRF2-VHLB-P-WH[1,2]	hallway vacancy sensor, manual on/auto-off setting only

[1] Vacancy models meet California Title 24 section 119(j) requirements
[2] Available Q2 2010

- Ceiling mount occupancy/vacancy sensor available in the following colors:
  white (WH) black (BL) light almond (LA)

Detection range for fine motion (ceiling-mount occupancy/vacancy sensors)

Ceiling height	Maximum room dimensions for complete floor coverage	Square feet
8 ft (2.4 m)	18 × 18 ft (5.5 × 5.5 m)	324 ft² (30.2 m²)
9 ft (2.7 m)	20 × 20 ft (6.1 × 6.1 m)	400 ft² (37.2 m²)
10 ft (3.0 m)	22 × 22 ft (6.7 × 6.7 m)	484 ft² (44.9 m²)
12 ft (3.7 m)	26 × 26 ft (7.9 × 7.9 m)	676 ft² (62.4 m²)

www.lutron.com
World Headquarters 1.610.282.3800
Technical Support Center 1.800.523.9466 (Available 24/7)
Customer Service 1.888.LUTRON1

LUTRON®

save energy with Lutron™ ®

© 04/2010 Lutron Electronics Co., Inc. | P/N 367-1598 REV C

Lutron energy-saving products

NEW

Ceiling mount occupancy/vacancy sensor (actual size)

NEW Wall mount occupancy/vacancy sensor (actual size)

NEW Ceiling mount daylight sensor (actual size)

Radio Powr Savr™

Wireless sensor product family

LUTRON®

save energy with Lutron™ ®

ECM 3:
Exterior Lighting

ECM Overview

Ameresco has developed and proposed a state of the art exterior lighting system to benefit the students, faculty, and staff of the Wayne, NJ School District. Our project replaces or upgrades approximately **433** exterior fixtures and will enhance the quality and appearance of the exterior lighting system. The system will employee new long life LED technology to improve energy efficiency and reduce operation and maintenance costs.

Figure 3.1:.New exterior fixtures will improve aesthetics and provide substantial energy savings.

ECM Detail

Existing System

- *General Information about the Existing System*

Ameresco identified **60** different exterior lamp/ballast/fixture combinations. Metal Halide (MH) lamps are used in 9% of the fixtures. High Pressure Sodium (HPS) lamps are also used in 42% of the fixtures. All of these HID fixtures use standard magnetic ballasts. Incandescent lamps are installed in 11% of fixtures.

- **Randall Carter-Elementary School:** Perimeters use HPS exterior fixtures, squares.
- **Theunis Dey-Elementary School:** Perimeters employ HPS squares, exterior fixtures, compact fluorescent drums, LED floods.
- **James Fallon-Elementary School:** Perimeters employ compact fluorescent cans, HPS exterior fixtures, MH cans, decorative fixtures.
- **John F. Kennedy-Elementary School:** Perimeters employ HPS exterior fixtures, floods, squares, LED exterior fixtures, compact fluorescent squares.

"Page content is subject to Confidentiality Restrictions"

- **Lafayette-Elementary School:** Perimeters employ HPS exterior fixtures, squares, LED floods, exterior fixtures, compact fluorescent exterior fixtures . Parking lots employ MH floods.

- **Packanack-Elementary School:** Perimeters employ HPS exterior fixtures, squares, compact fluorescent exterior fixtures, floods, cans, LED floods, MH exterior fixtures.

- **Pines Lake-Elementary School:** Perimeters employ HPS exterior fixtures, squares, floods, compact fluorescent drums, exterior fixtures, MH parking/roadway fixtures.

- **Ryerson-Elementary School:** Perimeters employ HPS exterior fixtures, squares, floods.

- **Albert Payson Terhune-Elementary School:** Perimeters employ compact fluorescent squares, MH exterior fixtures, LED exterior fixtures, HPS exterior fixtures . Parking lots employ MH parking/roadway fixtures.

- **Anthony Wayne-Middle School:** Perimeters employ compact fluorescent sconces, squares, MH indirects, cans . Parking lots employ HPS parking/roadway fixtures.

- **Schuyler-Colfax-Middle School:** Perimeters employ HPS squares, exterior fixtures, incandescent exterior fixtures, sconces, incandescent quartz exterior fixtures.

- **George Washington-Middle School:** Perimeters employ HPS squares, exterior fixtures, incandescent floods, squares, MH floods.

- **Wayne Hills-High School:** Perimeters employ compact fluorescent cans, squares, drums, floods, incandescent cans, floods, HPS exterior fixtures, cans, squares.

- **Wayne Valley-High School:** Perimeters employ compact fluorescent squares, exterior fixtures, wall mounted fixtures, cans, incandescent cans, floods, HPS exterior fixtures, MH floods . Parking lots employ MV parking/roadway fixtures, MH floods, HPS parking/roadway fixtures . Driveways employ MV parking/roadway fixtures.

- **Preakness (Library Community Center):** Perimeters employ HPS exterior fixtures, squares, parking/roadway fixtures, incandescent cans, wall mounted fixtures, compact fluorescent squares, MH floods . Parking lots employ HPS floods.

- **Board of Ed Administration:** Perimeters employ incandescent cans, HPS exterior fixtures.

Proposed System

General Information about the Proposed System

Ameresco proposes to replace existing exterior HID fixtures with latest LED fixtures, which offer vastly improved product lifetimes, while providing optimum light levels with minimal wasted light & trespass. LED fixtures produce light efficiently, then effectively direct that light onto the target areas.

Considering lifetime ratings of LED fixtures are 2 to 3 times greater than the HID's they replace, service intervals are greatly extended. Where HPS lamps exist, the change from "yellow" to "white" light will make

"Page content is subject to Confidentiality Restrictions"

the exterior appear much brighter, although future light readings taken with standard photopic meters may indicate non-compliance with IESNA recommendations.

- *Specific Information about the Proposed System, by Building*

Below is a brief description of some of the work to be accomplished. Please refer to the "Lighting System Analysis" in Appendix I, as this is a complete list of work to be performed.

Randall Carter-Elementary School: Existing fixtures shall be replaced with a new led wallpack for perimeters.

Theunis Dey-Elementary School: Existing fixtures shall be replaced with a new led wallpack for perimeters.

James Fallon-Elementary School: Existing fixtures shall be replaced with a new led wallpack for perimeters. Existing fixtures will receive a led conversion kit for perimeters.

John F. Kennedy-Elementary School: Existing fixtures shall be replaced with a new led wallpack for perimeters. Existing fixtures shall be replaced with a new led flood for perimeters.

Lafayette-Elementary School: Existing fixtures shall be replaced with a new led wallpack for perimeters, for parking lots.

Packanack-Elementary School: Existing fixtures shall be replaced with a new led wallpack for perimeters. Existing fixtures shall be replaced with a new led flood for perimeters.

Pines Lake-Elementary School: Existing fixtures shall be replaced with a new led wallpack for perimeters. Existing fixtures shall be replaced with a new led shoebox for perimeters.

Ryerson-Elementary School: Existing fixtures shall be replaced with a new led wallpack for perimeters. Existing fixtures shall be replaced with a new led cobra head for perimeters. Existing fixtures will receive compact fluorescent lamps for perimeters.

Albert Payson Terhune-Elementary School: Existing fixtures shall be replaced with a new led wallpack for perimeters. Existing fixtures shall be replaced with a new led shoebox for parking lots.

Anthony Wayne-Middle School: Existing fixtures shall be replaced with a new led shoebox for parking lots. Existing fixtures will receive a led conversion kit for perimeters.

Schuyler-Colfax-Middle School: Existing fixtures shall be replaced with a new led wallpack for perimeters. Existing fixtures will receive compact fluorescent lamps for perimeters. Existing fixtures shall be replaced with a new led flood for perimeters.

George Washington-Middle School: Existing fixtures shall be replaced with a new led wallpack for perimeters. Existing fixtures shall be replaced with a new led flood for perimeters. Existing fixtures will receive compact fluorescent lamps for perimeters.

"Page content is subject to Confidentiality Restrictions"

Wayne Hills-High School: Existing fixtures will receive a led screw-base for perimeters. Existing fixtures shall be replaced with a new led flood for perimeters. Existing fixtures shall be replaced with a new led wallpack for perimeters. Existing fixtures will receive compact fluorescent lamps for perimeters.

Wayne Valley-High School: Existing fixtures shall be replaced with a new led shoebox for parking lots, for driveways. Existing fixtures shall be replaced with a new led cobra head for parking lots, for perimeters. Existing fixtures shall be replaced with a new led wallpack for perimeters, for parking lots. Existing fixtures will receive a led conversion kit for perimeters. Existing fixtures shall be replaced with a new led flood for perimeters.

Preakness (Library Community Center): Existing fixtures shall be replaced with a new led wallpack for perimeters. Existing fixtures shall be replaced with a new led cobra head for parking lots, for perimeters. Existing fixtures will receive a led screw-base for perimeters. Existing fixtures will receive compact fluorescent lamps for perimeters.

Board of Ed Administration: Existing fixtures will receive a led screw-base for perimeters. Existing fixtures shall be replaced with a new led wallpack for perimeters.

Equipment, Design and Construction Documentation

Equipment will be identified in submittals provided for approval prior to procurement. The lighting system audit completed for each facility will be submitted as the basis for construction. The audit will include the existing descriptions, operating hours, and proposed retrofit description. These documents will be submitted for review and comment. Upon approval, these will constitute the construction documents. Upon completion of the construction phase, the documents will be revised as needed to reflect "As-Built" conditions, and submitted in multiple for record.

Impact on Facility Operations and Performance

Integration of Proposed Equipment with Existing Systems

The new lighting system, and all components thereof, will be fully integrated into the existing lighting systems. We assume the entire lighting and lighting controls systems comply with, but not limited to, the latest codes, the latest standards, local jurisdictions, and work was done in a quality workmanship manner, per NECA, and other applicable recommend best practices universally accepted throughout the electrical industry. Further we assume that all existing devices, which are defined in NEC, which includes but not limited to switches, outlets, wiring, etc. are in acceptable condition in order to implement our scope as outlined in the contract documents. All existing junction boxes, poles, mounting surfaces and structures are assumed to be in acceptable condition to allow the installation of the products indicated in the scope. Required upgrades to meet safety or other codes, and/or to prepare the location for the installation as described above, can be performed on a time and material basis.

"Page content is subject to Confidentiality Restrictions"

Environmental Impact

There are no potential adverse environmental impacts associated with this lighting upgrade. During construction, Ameresco will remove, package, and recycle all existing lamps that contain mercury and ballasts that contain PCBs or DEHP according to applicable regulations.

"Page content is subject to Confidentiality Restrictions"

Appendix for ECM 3: Exterior Lighting

I. Energy Savings Calculations

This page is intentionally left blank.

Project Template	
Energy and Demand Savings Summary	
Measure ID:	**3**
Measure Name:	**Exterior Lighting**
Measure Location:	
Engineers:	

Site Name:		**Carter ES**	**Dey ES**	**Fallon ES**	**Kennedy ES**	**Lafayette ES**	**Packanack ES**	**Pines Lake ES**	**Ryerson ES**	**Terhune ES**	**Anthony Wayne MS**	**Colfax MS**	**Washington MS**	**Wayne Hills HS**	**Wayne Valley HS**	**Preakness**	**Admin**	**Summary**
Item	Units	Savings	Savings	Savings	Savings	Savings	Savings	Savings	Savings	Savings	Savings	Savings	Savings	Savings	Savings	Savings	Savings	
Electricity																		
Energy On-Peak	kWh	9,566	7,556	11,528	10,972	8,480	7,065	17,117	13,718	4,954	32,162	8,615	9,115	7,770	50,692	17,183	6,406	222,899
Energy Off-Peak	kWh	0	0	0	0	0	0	0	0	0	0	0	0	0	0	0	0	0
Energy Total	kWh	9,566	7,556	11,528	10,972	8,480	7,065	17,117	13,718	4,954	32,162	8,615	9,115	7,770	50,692	17,183	6,406	222,899
Demand On-Peak, Monthly	kW	2.2	1.7	2.6	2.5	1.9	1.6	3.9	3.1	1.1	7.3	2.0	2.1	1.8	11.6	3.9	2.5	51.9
Demand On-Peak, Annual	kW	0.0	0.0	0.0	0.0	0.0	0.0	0.0	0.0	0.0	0.0	0.0	0.0	0.0	0.0	0.0	0.0	0.0
Demand Off-Peak, Monthly	kW	0.0	0.0	0.0	0.0	0.0	0.0	0.0	0.0	0.0	0.0	0.0	0.0	0.0	0.0	0.0	0.0	0.0
Demand Off-Peak, Annual	kW	0.0	0.0	0.0	0.0	0.0	0.0	0.0	0.0	0.0	0.0	0.0	0.0	0.0	0.0	0.0	0.0	0.0
Fossil Fuel																		0
Natural Gas (NG)	Therms	0	0	0	0	0	0	0	0	0	0	0	0	0	0	0	0	0
Liquid Propane Gas (LPG)	Gallons	0	0	0	0	0	0	0	0	0	0	0	0	0	0	0	0	0
Steam	Mlbs	0	0	0	0	0	0	0	0	0	0	0	0	0	0	0	0	0
Fuel Oil, #2	Gallons	0	0	0	0	0	0	0	0	0	0	0	0	0	0	0	0	0
Fuel Oil, #4	Gallons	0	0	0	0	0	0	0	0	0	0	0	0	0	0	0	0	0
Fuel Oil, #6	Gallons	0	0	0	0	0	0	0	0	0	0	0	0	0	0	0	0	0
Miscellaneous	Misc	0	0	0	0	0	0	0	0	0	0	0	0	0	0	0	0	0
Water																		0
Water Savings	kGallons																	0
Sewer																		0
Sewer Savings	kGallons																	0

Appendix for ECM 3: Exterior Lighting

II. Manufacturer Specification Sheets

"Page content is subject to Confidentiality Restrictions"

This page is intentionally left blank.

CAN-EDG-3M-DM THE EDGE® LED Canopy Light – Type III Medium

Rev. Date: 04/15/10

BetaLED Catalog #: CAN - EDG - - DM - - C - - - -

Reset

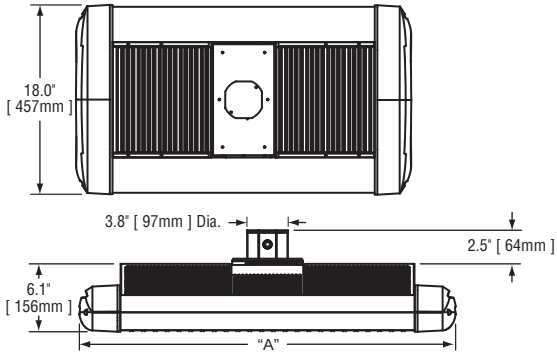

# of LEDs	Dim. "A"
40	15.75"
60	17.75"
80	15.75"
100	17.75"
120	19.75"
140	21.75"
160	23.75"
180	25.75"
200	27.75"
220	29.75"
240	31.75"

Notes:

Product	Family	Optic	Mounting	# of LEDs (x 10)	LED Series	Voltage	Color Options	Factory-Installed Options
CAN	EDG	☐ 3M[1] ☐ 3MB[2]	DM[3]	☐ 04[4] ☐ 06[5] ☐ 08 ☐ 10 ☐ 12 ☐ 14 ☐ 16 ☐ 18 ☐ 20 ☐ 22 ☐ 24	C	☐ UL Universal 120–277V ☐ UH Universal 347–480V ☐ 12 120V ☐ 24 240V ☐ 27 277V ☐ 34 347V	☐ SV Silver ☐ BK Black ☐ BZ Bronze ☐ PB Platinum Bronze ☐ WH White	Please type additional options in manually on the lines provided above. ☐ 43K 4300K Color Temperature[6] ☐ 525 525mA Drive Current[7,8] ☐ DIM5 0–10V Dimming[9,10] ☐ F Fuse[11,12] ☐ HL Hi/Low (175/350/525, dual circuit input)[13] ☐ P Photocell[14,15] ☐ TL Two-Level (175/525 w/ integrated sensor control)[13] ☐ TL2 Two-Level (0/350 w/ integrated sensor control)[13] ☐ TL3 Two-Level (0/525 w/ integrated sensor control)[13]

Footnotes

1. IESNA Type III Medium distribution
2. IESNA Type III Medium distribution with backlight control
3. Direct mount
4. Uses 80 LED size with two blanks in outside positions
5. Uses 100 LED size with two blanks in outside positions
6. Color temperature per fixture; minimum 70 CRI
7. Driver operates at 525mA instead of the standard 350mA providing a higher lumen output and a shorter life
8. Available on fixtures with 40–120 LEDs
9. Control by others
10. Refer to dimming spec sheet for availability and additional information
11. When code dictates fusing use time delay fuse
12. Not available when UH voltage is selected
13. Refer to multi-level spec sheet for availability and additional information
14. This option not available with all multi-level options. Refer to multi-level spec sheet for more information
15. Must specify voltage other than UL or UH

LED PERFORMANCE SPECS

# of LEDs	Initial Delivered Lumens – Type III Medium @ 6000K	B	U	G	Initial Delivered Lumens – Type III Medium w/ Backlight Control @ 6000K	B	U	G	Initial Delivered Lumens – Type III Medium @ 4300K	B	U	G	Initial Delivered Lumens – Type III Medium w/ Backlight Control @ 4300K	B	U	G	System Watts 120–277V	Total Current @ 120V	Total Current @ 230V	Total Current @ 277V	System Watts 347–480V*	Total Current @ 347V	Total Current @ 480V	L_{70} Hours** @ 25° C (77° F)
		Rating***				Rating***				Rating***				Rating***											
350mA (Standard) Fixture Operating at 25° C (77° F)																								
40[4]	3,298 (04)	1	1	1	2,473 (04)	0	1	1	2,892 (04)	1	1	1	2,169 (04)	0	1	1	49	0.41	0.23	0.20	51	0.15	0.12	105,000
60[5]	4,946 (06)	2	2	2	3,710 (06)	0	1	1	4,338 (06)	2	2	2	3,254 (06)	0	1	1	71	0.60	0.32	0.28	74	0.22	0.17	105,000
80	6,595 (08)	2	2	2	4,946 (08)	1	2	2	5,785 (08)	2	2	2	4,338 (08)	1	2	1	93	0.78	0.41	0.35	96	0.28	0.21	105,000
100	8,244 (10)	3	3	3	6,183 (10)	1	3	2	7,231 (10)	2	2	2	5,423 (10)	1	2	2	116	0.98	0.52	0.43	119	0.35	0.26	105,000
120	9,893 (12)	3	3	3	7,419 (12)	1	3	2	8,677 (12)	3	3	3	6,508 (12)	1	3	2	139	1.17	0.61	0.52	141	0.41	0.30	105,000
140	11,541 (14)	3	3	3	8,656 (14)	1	3	2	10,123 (14)	3	3	3	7,592 (14)	1	3	2	164	1.39	0.74	0.63	170	0.49	0.35	105,000
160	13,190 (16)	3	3	3	9,893 (16)	1	3	2	11,569 (16)	3	3	3	8,677 (16)	1	3	2	186	1.58	0.83	0.71	192	0.55	0.40	105,000
180	14,839 (18)	3	3	3	11,129 (18)	1	3	2	13,015 (18)	3	3	3	9,762 (18)	1	3	2	211	1.77	0.93	0.79	215	0.62	0.45	105,000
200	16,488 (20)	3	3	3	12,366 (20)	2	3	2	14,462 (20)	3	3	3	10,846 (20)	1	3	2	233	1.97	1.03	0.87	237	0.68	0.49	105,000
220	18,136 (22)	3	3	3	13,602 (22)	2	3	2	15,908 (22)	3	3	3	11,931 (22)	1	3	2	256	2.16	1.13	0.95	259	0.75	0.54	105,000
240	19,785 (24)	3	3	3	14,839 (24)	2	3	3	17,354 (24)	3	3	3	13,015 (24)	2	3	2	279	2.35	1.23	1.03	282	0.81	0.59	105,000
525mA Fixture Operating at 25° C (77° F)																								
40[4]	4,287 (04)	2	2	2	3,215 (04)	0	1	1	3,760 (04)	1	1	1	2,820 (04)	0	1	1	69	0.58	0.31	0.27	75	0.22	0.19	61,000
60[5]	6,430 (06)	2	2	2	4,823 (06)	1	2	2	5,640 (06)	2	2	2	4,230 (06)	1	2	1	110	0.92	0.49	0.41	116	0.33	0.27	61,000
80	8,574 (08)	3	3	3	6,430 (08)	1	3	2	7,520 (08)	2	2	2	5,640 (08)	1	2	2	138	1.16	0.62	0.54	145	0.42	0.32	61,000
100	10,717 (10)	3	3	3	8,038 (10)	1	3	2	9,400 (10)	3	3	3	7,050 (10)	1	3	2	177	1.49	0.79	0.68	186	0.53	0.40	61,000
120	12,860 (12)	3	3	3	9,645 (12)	1	3	2	11,280 (12)	3	3	3	8,460 (12)	1	3	2	217	1.82	0.96	0.81	226	0.65	0.48	61,000

* Utilizes magnetic step-down transformer when 525mA drive current or multi-level options are selected

** For recommended lumen depreciation data see TD-13

*** For more information on the IES BUG (Backlight-Uplight-Glare) Rating visit www.iesna.org/PDF/Erratas/TM-15-07BugRatingsAddendum.pdf

© 2010BetaLED®, a division of Ruud Lighting • 1200 92nd Street • Sturtevant, WI 53177 • 800-236-6800 • www.betaLED.com

Made in the U.S.A. of U.S. and imported parts.
Meets Buy American requirements within the ARRA.

ARE-EDR-2M-R3 THE EDGE® LED Round Area Light – Type II Medium

Rev. Date: 11/9/10

BetaLED Catalog #: CAN - EDG - - DM - - C - - - -

Reset

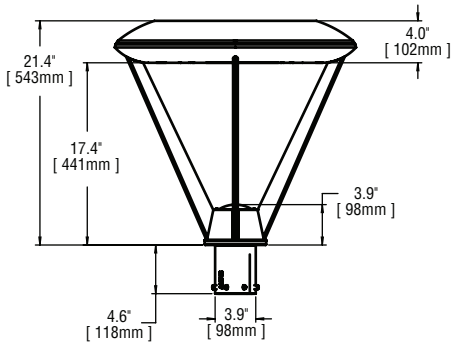

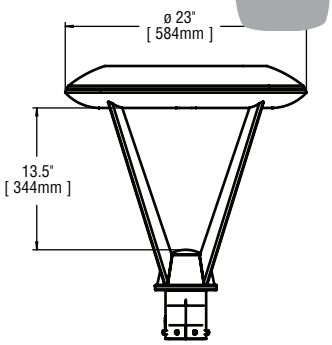

Notes:

Product	Family	Optic	Mounting	# of LEDs (x 10)	LED Series	Voltage	Color Options	Factory-Installed Options
ARE	EDR	☐ 2M[1] ☐ 2MB[2]	R3[3]	☐ 04[4] ☐ 06[4] ☐ 08[4] ☐ 10[4] ☐ 12	C	☐ UL Universal 120–277V ☐ UH Universal 347–480V ☐ 12 120V ☐ 24 240V ☐ 27 277V ☐ 34 347V	☐ SV Silver ☐ BK Black ☐ BZ Bronze ☐ PB Platinum Bronze ☐ WH White	Please type additional options in manually on the lines provided above. ☐ 43K 4300K Color Temperature[5] ☐ 525 525mA Drive Current[6,7] ☐ DIM5 0–10V Dimming (525mA maximum)[8,9] ☐ F Fuse[10,11] ☐ HL Hi/Low (175/350/525, dual circuit input)[12] ☐ TL Two-Level (175/525 w/ integrated sensor control)[12,13] ☐ TL2 Two-Level (0/350 w/ integrated sensor control)[12,13] ☐ TL3 Two-Level (0/525 w/ integrated sensor control)[12,13]

Footnotes

1. IESNA Type II Medium distribution
2. IESNA Type II Medium distribution with backlight control
3. Spider mount, center tenon; hub slip-fits over a 2-3/8 to 3" OD steel or aluminum tenon or pole
4. Consist of multiple 20 LED light bars. 40, 60, 80, and 100 LED units use blanks as needed in place of populated light bars
5. Color temperature per fixture; minimum 70 CRI
6. Driver operates at 525mA instead of the standard 350mA providing a higher lumen output and a shorter life
7. Available on fixtures with 40–120 LEDs; maximum 60 LEDs with UH voltage
8. Control by others
9. Refer to dimming spec sheet for availability and additional information
10. When code dictates fusing use time delay fuse
11. Not available when UH voltage is selected
12. Refer to multi-level spec sheet for availability and additional information
13. Recommended maximum pole height is 10'; consult factory for pole heights greater than 10'

LED PERFORMANCE SPECS

# of LEDs	Initial Delivered Lumens – Type II Medium @ 6000K	B	U	G	Rating***	Initial Delivered Lumens – Type II Medium w/ Backlight Control @ 6000K	B	U	G	Rating***	Initial Delivered Lumens – Type II Medium @ 4300K	B	U	G	Rating***	Initial Delivered Lumens – Type II Medium w/ Backlight Control @ 4300K	B	U	G	Rating***	System Watts 120–277V	Total Current @ 120V	Total Current @ 230V	Total Current @ 277V	System Watts 347–480V*	Total Current @ 347V	Total Current @ 480V	L_{70} Hours** @ 25° C (77° F)
350mA (Standard) Fixture Operating at 25° C (77° F)																												
40[4]	3,421 (04)	1	1	1		2,556 (04)	0	1	1		3,001 (04)	1	1	1		2,242 (04)	0	1	1		49	0.41	0.23	0.20	51	0.15	0.12	105,000
60[4]	5,132 (06)	2	2	1		3,833 (06)	1	1	1		4,501 (06)	1	1	1		3,362 (06)	1	1	1		71	0.60	0.32	0.28	74	0.22	0.17	105,000
80[4]	6,842 (08)	2	2	2		5,111 (08)	1	2	1		6,002 (08)	2	2	2		4,483 (08)	1	2	1		93	0.78	0.41	0.35	96	0.28	0.21	105,000
100[4]	8,553 (10)	2	2	2		6,389 (10)	1	2	2		7,502 (10)	2	2	2		5,604 (10)	1	2	1		116	0.98	0.52	0.43	119	0.35	0.26	105,000
120	10,263 (12)	2	3	2		7,667 (12)	1	2	2		9,002 (12)	2	2	2		6,725 (12)	1	2	2		139	1.17	0.61	0.52	141	0.41	0.30	105,000
525mA Fixture Operating at 25° C (77° F)																												
40[4]	4,448 (04)	1	1	1		3,322 (04)	1	1	1		3,901 (04)	1	1	1		2,914 (04)	0	1	1		69	0.58	0.31	0.27	75	0.22	0.19	61,000
60[4]	6,671 (06)	2	2	2		4,983 (06)	1	2	1		5,851 (06)	2	2	2		4,371 (06)	1	2	1		110	0.92	0.49	0.41	116	0.33	0.27	61,000
80[4]	8,895 (08)	2	2	2		6,644 (08)	1	2	2		7,802 (08)	2	2	2		5,828 (08)	1	2	2		138	1.16	0.62	0.54	145	0.42	0.32	61,000
100[4]	11,119 (10)	3	3	3		8,306 (10)	1	3	2		9,752 (10)	2	2	2		7,285 (10)	1	2	2		177	1.49	0.79	0.68	186	0.53	0.40	61,000
120	13,343 (12)	3	3	3		9,967 (12)	1	3	2		11,703 (12)	3	3	3		8,742 (12)	1	3	2		217	1.82	0.96	0.81	226	0.65	0.48	61,000

* Utilizes magnetic step-down transformer when 525mA drive current or multi-level options are selected

** For recommended lumen depreciation data see TD-13

*** For more information on the IES BUG (Backlight-Uplight-Glare) Rating visit www.iesna.org/PDF/Erratas/TM-15-07BugRatingsAddendum.pdf

NOTE: All data subject to change without notice.

© 2010 BetaLED®, a division of Ruud Lighting • 1200 92nd Street • Sturtevant, WI 53177 • 800-236-6800 • www.betaLED.com

Made in the U.S.A. of U.S. and imported parts.
Meets Buy American requirements within the ARRA.

SEC-EDG-2M-WM THE EDGE® LED Wall Pack

Rev. Date:11/11/10

BetaLED Catalog #: CAN - EDG - - DM - - C - - - -

Reset

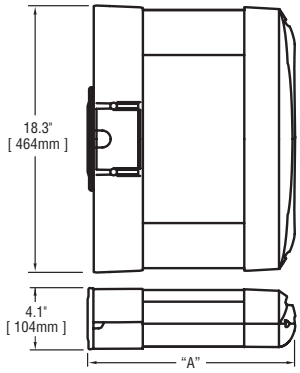

# of LEDs	Dim. "A"
20	11.91"
40	11.91"
60	13.91"
80	15.91"
100	17.91"
120	19.91"

Notes:

Product	Family	Optic	Mounting	# of LEDs (x 10)	LED Series	Voltage	Color Options	Factory-Installed Options
SEC	EDG	☐ 2M[1] ☐ 2MB[2]	WM[3]	☐ 02 ☐ 04 ☐ 06 ☐ 08 ☐ 10 ☐ 12	C	☐ UL Universal 120–277V ☐ UH Universal 347–480V ☐ 12 120V ☐ 24 240V ☐ 27 277V ☐ 34 347V	☐ SV Silver ☐ BZ Bronze ☐ BK Black ☐ WH White ☐ PB Platinum Bronze	Please type additional options in manually on the lines provided above. ☐ 43K 4300K Color Temperature[4] ☐ 525 525mA Drive Current[5,6] ☐ F Fuse[7,8] ☐ P Photocell[9,10] ☐ TL2 Two-level (0/350 w/integrated sensor control)[11]

Footnotes

1. IESNA Type II Medium distribution
2. IESNA Type II Medium distribution with backlight control
3. Wall mount
4. Color temperature per fixture; minimum 70 CRI
5. Driver operates at 525mA instead of the standard 350mA providing a higher lumen output and a shorter life
6. Available on fixtures with 20–40 LEDs
7. Not available when UH voltage is selected
8. When code dictates fusing use time delay fuse
9. Must specify voltage other than UL or UH
10. Not available with multi-level options
11. Refer to multi-level spec sheet for availability and additional information

LED PERFORMANCE SPECS

# of LEDs	Initial Delivered Lumens – Type II Medium @ 6000K	B	U	G	Initial Delivered Lumens – Type II Medium w/ Backlight Control @ 6000K	B	U	G	Initial Delivered Lumens – Type II Medium @ 4300K	B	U	G	Initial Delivered Lumens – Type II Medium w/ Backlight Control @ 4300K	B	U	G	System Watts 120–277V	Total Current @ 120V	Total Current @ 230V	Total Current @ 277V	System Watts 347–480V*	Total Current @ 347V	Total Current @ 480V	L_{70} Hours** @ 25° C (77° F)
		Rating***				Rating***				Rating***				Rating***										
350mA (Standard) Fixture Operating at 25° C (77° F)																								
20	1,711 (02)	1	1	1	1,278 (02)	0	1	1	1,500 (02)	1	1	1	1,121 (02)	0	1	1	25	0.23	0.11	0.10	30	0.09	0.08	105,000
40	3,421 (04)	1	1	1	2,556 (04)	0	1	1	3,001 (04)	1	1	1	2,242 (04)	0	1	1	49	0.41	0.23	0.20	51	0.15	0.12	105,000
60	5,132 (06)	2	2	1	3,833 (06)	1	1	1	4,501 (06)	1	1	1	3,362 (06)	1	1	1	71	0.60	0.32	0.28	74	0.22	0.17	105,000
80	6,842 (08)	2	2	2	5,111 (08)	1	2	1	6,002 (08)	2	2	2	4,483 (08)	1	2	1	93	0.78	0.41	0.35	96	0.28	0.21	105,000
100	8,553 (10)	2	2	2	6,389 (10)	1	2	2	7,502 (10)	2	2	2	5,604 (10)	1	2	1	116	0.98	0.52	0.43	119	0.35	0.26	105,000
120	10,263 (12)	2	3	2	7,667 (12)	1	2	2	9,002 (12)	2	2	2	6,725 (12)	1	2	2	139	1.17	0.61	0.52	141	0.41	0.30	105,000
525mA Fixture Operating at 25° C (77° F)																								
20	2,224 (02)	1	1	1	1,661 (02)	0	1	1	1,950 (02)	1	1	1	1,457 (02)	0	1	1	37	0.31	0.18	0.17	43	0.13	0.15	61,000
40	4,448 (04)	1	1	1	3,322 (04)	1	1	1	3,901 (04)	1	1	1	2,914 (04)	0	1	1	69	0.58	0.31	0.27	75	0.22	0.19	61,000

* Utilizes magnetic step-down transformer when 525mA drive current or multi-level options are selected

** For recommended lumen depreciation data see TD-13

*** For more information on the IES BUG (Backlight-Uplight-Glare) Rating visit www.iesna.org/PDF/Erratas/TM-15-07BugRatingsAddendum.pdf

NOTE: All data subject to change without notice.

© 2010 BetaLED®, a division of Ruud Lighting • 1200 92nd Street • Sturtevant, WI 53177 • 800-236-6800 • www.betaLED.com

Made in the U.S.A. of U.S. and imported parts.
Meets Buy American requirements within the ARRA

FLD-EDG-15-AA THE EDGE™ LED Floodlight – 15° Optic

Rev. Date: 12/8/09

BetaLED Catalog #: CAN - EDG - - DM - - C - - - -

Reset

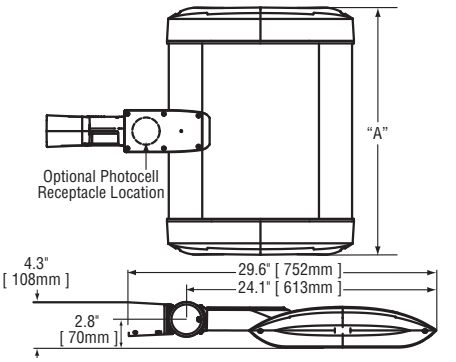

# of LEDs	Dim. "A"
20	11.75"
40	11.75"
60	13.75"
80	15.75"
100	17.75"
120	19.75"
140	21.75"
160	23.75"
180	25.75"
200	27.75"
220	29.75"
240	31.75"

Notes:

Product	Family	Optic in Degrees	Mounting	# of LEDs (x 10)	LED Series	Voltage	Color Options
FLD	EDG	15[1]	AA[2]	☐ 02 ☐ 04 ☐ 06 ☐ 08 ☐ 10 ☐ 12 ☐ 14 ☐ 16 ☐ 18 ☐ 20 ☐ 22 ☐ 24	C	☐ UL Universal 120–277V ☐ UH Universal 347–480V ☐ 12 120V ☐ 24 240V ☐ 27 277V ☐ 34 347V	☐ SV Silver ☐ BK Black ☐ BZ Bronze ☐ PB Platinum Bronze ☐ WH White

Factory-Installed Options

Please type additional options in manually on the lines provided above.

- ☐ 43K 4300K Color Temperature[3]
- ☐ 525 525mA Drive Current[4,5]
- ☐ DIM 0–10V Dimming[6,7]
- ☐ F Fuse[8]
- ☐ HL Hi/Low (175/350/525, dual circuit input)[9-11]
- ☐ P Photocell[12-15]
- ☐ R NEMA Photocell Receptacle[14-18]
- ☐ TL Two-Level (175/525 w/ integrated sensor control)[9,11]
- ☐ TL2 Two-Level (0/350 w/ integrated sensor control)[11]
- ☐ TL3 Two-Level (0/525 w/ integrated sensor control)[9,11]

Footnotes

1. Distribution similar to spot (15°)
2. Adjustable arm for mounting to 2" tenon
3. Color temperature per fixture; minimum 70 CRI
4. Driver operates at 525mA instead of the standard 350mA providing a higher lumen output and a shorter life
5. Available on fixtures with 20–120 LEDs
6. Control by others
7. Please consult factory for availability
8. Not available with TL, TL2, or TL3 options when UH voltage is selected
9. Available on 120–277V fixtures with 20–120 LEDs and 347–480V fixtures with 40–120 LEDs
10. Sensor not included
11. Refer to multi-level spec sheet for more information
12. Not available with HL option when UH voltage is selected
13. Must specify voltage other than UL or UH
14. Not available with TL2, or TL3 options
15. Not available with TL option when UH voltage is selected
16. 100 LED maximum when used with TL option
17. Not available with HL option
18. Intended for horizontal mounting

LED PERFORMANCE SPECS

# of LEDs	Initial Delivered Lumens – 15° Flood Optic @ 6000K	Initial Delivered Lumens – 15° Flood Optic @ 4300K	System Watts 120–277V	Total Current @ 120V	Total Current @ 230V	Total Current @ 277V	System Watts 347–480V[1]	Total Current @ 347V	Total Current @ 480V	L_{70} Hours[2] @ 25° C (77° F)
350mA (Standard) Fixture Operating at 25° C (77° F)										
20	1,958 (02)	1,717 (02)	25	0.23	0.11	0.10	30	0.10	0.15	105,000
40	3,916 (04)	3,435 (04)	49	0.41	0.23	0.20	55	0.16	0.16	105,000
60	5,874 (06)	5,152 (06)	71	0.60	0.32	0.28	77	0.22	0.20	105,000
80	7,832 (08)	6,869 (08)	93	0.78	0.41	0.35	99	0.29	0.23	105,000
100	9,789 (10)	8,587 (10)	116	0.98	0.52	0.43	123	0.35	0.28	105,000
120	11,747 (12)	10,304 (12)	139	1.17	0.61	0.52	146	0.42	0.33	105,000
140	13,705 (14)	12,021 (14)	164	1.39	0.74	0.63	172	0.50	0.37	105,000
160	15,663 (16)	13,738 (16)	186	1.58	0.83	0.71	195	0.56	0.41	105,000
180	17,621 (18)	15,456 (18)	211	1.77	0.93	0.79	220	0.63	0.47	105,000
200	19,579 (20)	17,173 (20)	233	1.97	1.03	0.87	243	0.70	0.51	105,000
220	21,537 (22)	18,890 (22)	256	2.16	1.13	0.95	267	0.77	0.56	105,000
240	23,495 (24)	20,608 (24)	279	2.35	1.23	1.03	291	0.84	0.61	105,000
525mA Fixture Operating at 25° C (77° F)										
20	2,545 (02)	2,232 (02)	37	0.31	0.18	0.17	43	0.13	0.15	61,000
40	5,091 (04)	4,465 (04)	69	0.58	0.31	0.27	75	0.22	0.19	61,000
60	7,636 (06)	6,697 (06)	110	0.92	0.49	0.41	116	0.33	0.27	61,000
80	10,181 (08)	8,930 (08)	138	1.16	0.62	0.54	145	0.42	0.32	61,000
100	12,726 (10)	11,162 (10)	177	1.49	0.79	0.68	186	0.53	0.40	61,000
120	15,272 (12)	13,395 (12)	217	1.82	0.96	0.81	226	0.65	0.48	61,000

1. Utilizes magnetic step-down transformer
2. For recommended lumen depreciation data see TD-13
3. For more information on the IES BUG (Backlight-Uplight-Glare) Rating visit www.iesna.org/PDF/Erratas/TM-15-07BugRatingsAddendum.pdf

© 2010 BetaLED®, a division of Ruud Lighting • 1200 92nd Street • Sturtevant, WI 53177 • 800-236-6800 • www.betaLED.com

Made in the U.S.A. of U.S. and imported parts.
Meets Buy American requirements within the ARRA.

ARE-EDG-3M-AA THE EDGE® LED Area Light – Type III Medium

Rev. Date: 11/9/10

BetaLED Catalog #: CAN - EDG - - DM - - C - - - -

Reset

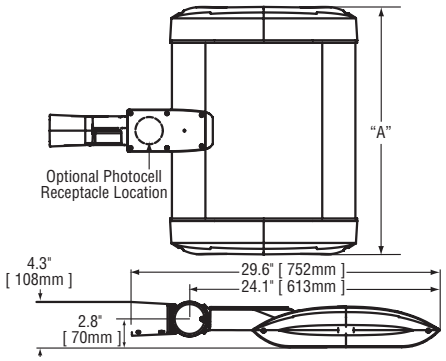

# of LEDs	Dim. "A"
20	12.06"
40	12.06"
60	14.06"
80	16.06"
100	18.06"
120	20.06"
140	22.06"
160	24.06"
180	26.06"
200	28.06"
220	30.06"
240	32.06"

Notes:

Product	Family	Optic	Mounting	# of LEDs (x 10)	LED Series	Voltage	Color Options
ARE	EDG	☐ 3M[1] ☐ 3MB[2]	AA[3]	☐ 02 ☐ 04 ☐ 06 ☐ 08 ☐ 10 ☐ 12 ☐ 14 ☐ 16 ☐ 18 ☐ 20 ☐ 22 ☐ 24	C	☐ UL Universal 120–277V ☐ UH Universal 347–480V ☐ 12 120V ☐ 24 240V ☐ 27 277V ☐ 34 347V	☐ SV Silver ☐ BK Black ☐ BZ Bronze ☐ PB Platinum Bronze ☐ WH White

Factory-Installed Options

Please type additional options in manually on the lines provided above.

- ☐ **43K** 4300K Color Temperature[4]
- ☐ **525** 525mA Drive Current[5,6]
- ☐ **DIM5** 0–10V Dimming (525mA maximum)[7,8]
- ☐ **F** Fuse[9,10]
- ☐ **HL** Hi/Low (175/350/525, dual circuit input)[11]
- ☐ **P** Photocell[12,13]
- ☐ **R** NEMA Photocell Receptacle[13,14]
- ☐ **TL** Two-Level (175/525 w/ integrated sensor control)[11]
- ☐ **TL2** Two-Level (0/350 w/ integrated sensor control)[11]
- ☐ **TL3** Two-Level (0/525 w/ integrated sensor control)[11]

Footnotes

1. IESNA Type III Medium distribution
2. IESNA Type III Medium distribution with backlight control
3. Adjustable arm for mounting to 2" (2-3/8" [60mm] O.D.) tenon
4. Color temperature per fixture; minimum 70 CRI
5. Driver operates at 525mA instead of the standard 350mA providing a higher lumen output and a shorter life
6. Available on fixtures with 20–120 LEDs
7. Control by others
8. Refer to dimming spec sheet for availability and additional information
9. Not available when UH voltage is selected
10. When code dictates fusing use time delay fuse
11. Refer to multi-level spec sheet for availability and additional information
12. Must specify voltage other than UL or UH
13. This option not available with all multi-level options. Refer to multi-level spec sheet for more information
14. Intended for horizontal mounting

LED PERFORMANCE SPECS

# of LEDs	Initial Delivered Lumens – Type III Medium @ 6000K	B	U	G	Initial Delivered Lumens – Type III Medium w/ Backlight Control @ 6000K	B	U	G	Initial Delivered Lumens – Type III Medium @ 4300K	B	U	G	Initial Delivered Lumens – Type III Medium w/ Backlight Control @ 4300K	B	U	G	System Watts 120–277V	Total Current @ 120V	Total Current @ 230V	Total Current @ 277V	System Watts 347–480V*	Total Current @ 347V	Total Current @ 480V	L_{70} Hours** @ 25° C (77° F)
		Rating***				Rating***				Rating***				Rating***											
350mA (Standard) Fixture Operating at 25° C (77° F)																									
20	1,649 (02)	1	1	1	1,237 (02)	0	1	1	1,446 (02)	1	1	1	1,085 (02)	0	1	1	25	0.23	0.11	0.10	30	0.09	0.08	105,000
40	3,298 (04)	1	1	1	2,473 (04)	0	1	1	2,892 (04)	1	1	1	2,169 (04)	0	1	1	49	0.41	0.23	0.20	51	0.15	0.12	105,000
60	4,946 (06)	2	2	2	3,710 (06)	0	1	1	4,338 (06)	2	2	2	3,254 (06)	0	1	1	71	0.60	0.32	0.28	74	0.22	0.17	105,000
80	6,595 (08)	2	2	2	4,946 (08)	1	2	2	5,785 (08)	2	2	2	4,338 (08)	1	2	1	93	0.78	0.41	0.35	96	0.28	0.21	105,000
100	8,244 (10)	3	3	3	6,183 (10)	1	3	2	7,231 (10)	2	2	2	5,423 (10)	1	2	2	116	0.98	0.52	0.43	119	0.35	0.26	105,000
120	9,893 (12)	3	3	3	7,419 (12)	1	3	2	8,677 (12)	3	3	3	6,508 (12)	1	3	2	139	1.17	0.61	0.52	141	0.41	0.30	105,000
140	11,541 (14)	3	3	3	8,656 (14)	1	3	2	10,123 (14)	3	3	3	7,592 (14)	1	3	2	164	1.39	0.74	0.63	170	0.49	0.35	105,000
160	13,190 (16)	3	3	3	9,893 (16)	1	3	2	11,569 (16)	3	3	3	8,677 (16)	1	3	2	186	1.58	0.83	0.71	192	0.55	0.40	105,000
180	14,839 (18)	3	3	3	11,129 (18)	1	3	2	13,015 (18)	3	3	3	9,762 (18)	1	3	2	211	1.77	0.93	0.79	215	0.62	0.45	105,000
200	16,488 (20)	3	3	3	12,366 (20)	2	3	2	14,462 (20)	3	3	3	10,846 (20)	1	3	2	233	1.97	1.03	0.87	237	0.68	0.49	105,000
220	18,136 (22)	3	3	3	13,602 (22)	2	3	2	15,908 (22)	3	3	3	11,931 (22)	1	3	2	256	2.16	1.13	0.95	259	0.75	0.54	105,000
240	19,785 (24)	3	3	3	14,839 (24)	2	3	3	17,354 (24)	3	3	3	13,015 (24)	2	3	2	279	2.35	1.23	1.03	282	0.81	0.59	105,000
525mA Fixture Operating at 25° C (77° F)																									
20	2,143 (02)	1	1	1	1,608 (02)	0	1	1	1,880 (02)	1	1	1	1,410 (02)	0	1	1	37	0.31	0.18	0.17	43	0.13	0.15	61,000
40	4,287 (04)	2	2	2	3,215 (06)	0	1	1	3,760 (04)	1	1	1	2,820 (04)	0	1	1	69	0.58	0.31	0.27	75	0.22	0.19	61,000
60	6,430 (06)	2	2	2	4,823 (06)	1	2	2	5,640 (06)	2	2	2	4,230 (06)	1	2	1	110	0.92	0.49	0.41	116	0.33	0.27	61,000
80	8,574 (08)	3	3	3	6,430 (08)	1	3	2	7,520 (08)	2	2	2	5,640 (08)	1	2	2	138	1.16	0.62	0.54	145	0.42	0.32	61,000
100	10,717 (10)	3	3	3	8,038 (10)	1	3	2	9,400 (10)	3	3	3	7,050 (10)	1	3	2	177	1.49	0.79	0.68	186	0.53	0.40	61,000
120	12,860 (12)	3	3	3	9,645 (12)	1	3	2	11,280 (12)	3	3	3	8,460 (12)	1	3	2	217	1.82	0.96	0.81	226	0.65	0.48	61,000

* Utilizes magnetic step-down transformer when 525mA drive current or multi-level options are selected

** For recommended lumen depreciation data see TD-13

*** For more information on the IES BUG (Backlight-Uplight-Glare) Rating visit www.iesna.org/PDF/Erratas/TM-15-07BugRatingsAddendum.pdf

NOTE: All data subject to change without notice.

© 2010 BetaLED®, a division of Ruud Lighting • 1200 92nd Street • Sturtevant, WI 53177 • 800-236-6800 • www.betaLED.com

Made in the U.S.A. of U.S. and imported parts.

Meets Buy American requirements within the ARRA.

SYLVANIA
ProPoint™ Outdoor Luminaires
LED Shoebox Fixture

Catalog #

Type

Project

Notes

Date

EPA: 1.8 ft. Length: 20" Width: 15" Height: 6.75" Weight: 28 lbs

The SYLVANIA ProPoint LED Shoebox luminaires, available from 55 Watts to 150 Watts, are suitable for replacing up to 400W existing architectural luminaires for illuminating roadways, area lighting, driveways, site lighting, entrance ways, parking areas, and walkways.

The SYLVANIA ProPoint LED Shoebox luminaire is your best choice for energy-efficient, environmentally preferable lighting for parking, area and site lighting. The Shoebox luminaire uses up to 68% less energy than traditional high pressure sodium and metal halide fixtures and maintains virtually all its luminosity for the 10+-year life of the light, significantly reducing replacement and maintenance costs. Cutting-edge "heat sink" technology keeps the LEDs at their optimum performance temperature and extends product life. And the proprietary photometric design technique will minimize glare and improve nighttime visibility to deliver superior illumination. SYLVANIA ProPoint Shoebox luminaires meet all LEED requirements for light pollution reduction credits by minimizing light trespass, reducing sky-glow, and reducing the impact on nocturnal environments.

The Shoebox optical is available with an acrylic lens. SYLVANIA LED Shoeboxes possess full cut-off and are Dark Sky friendly.

Specifications

LED Systems/Electrical: The SYLVANIA ProPoint LED Shoebox luminaire features efficacy up to 87 lumens per watt and is offered in 55 Watts, 80 Watts, 100 Watts, 120 Watts and 150 Watts. The Shoebox luminaire has a 120, 220, 240 or 277 VAC voltage range and incorporates SYLVANIA lightning surge protection in each unit, which is effective at suppressing most surges on the AC line and meets IEEE C62.41-2002 Category C low. The LED driver is a constant current device with a high-power factor correction to maximize power utilization. The driver meets UL1310 and UL48 Class 2 with built-in over-temperature protection. Input voltage ranges from 120-277 VAC. The driver passes FCC Part 15, Class A for both conducted and radiated emissions.

Optic: Light Distribution is available in Type II or Type III with a profiled acrylic lens for maximum transmission of light. The LED modules utilize an aluminum metal clad board for maximum heat transfer, thus leading to longer life. Direction and intensity of light is tightly controlled. Control of the LEDs allows the Shoebox fixtures to maintain light control of the LEDs to levels equal to or greater than MH or HPS at much lower energy consumption levels.

Listings: Testing and Compliances include: LM79, CE Certified, Dark Sky compliant, IP 55 Certified Optical Assembly, UL1310, FCC and RoHS Certified and meets IEEE C62.41-2002 Category C low.

Color Characteristics: The CRI is 70 or above with a CCT of 4500 or 6000K.

Installation: Fixture mounts horizontally with rectangular arm to round and square poles.

Life: Life is >70,000 hours at L_{70}.

Construction: The luminaire is constructed of a one-piece cast, low copper (<0.4%CU) aluminum alloy. It has a TGIC thermoset polyester powder coat paint finish, 2.5-mil nominal thickness; standard colors are black and bronze.

Options: Twist lock photo cell is optional. Receptacle is included.

Warranty: SYLVANIA ProPoint LED Shoebox luminaires are covered by our standard five year outdoor LED Fixture Warranty.

Comparison

HID Source	LED Source	Energy Savings
100W HPS (120W)	55W	54%
100W MH (130W)	55W	58%
150W HPS (170W)	80W	53%
150W MH (185W)	80W	57%
175W MH (208 W)	80W	62%
200W MH (230W)	100W	57%
250W HPS (295W)	100W	66%
400W HPS (465W)	150W	68%
400W MH (452W)	150W	67%

www.sylvania.com

D6 Area Light LED Retrofit Kit

INSTALLATION GUIDE

Above image of 55W model.

The D6 Area Light LED Retrofit Kit from SYLVANIA is an alternative to high-intensity discharge (HID) lamps up to 175W at pole heights up to 30 feet. The directional light distribution of high power LEDs allows the delivery of light only where needed, reducing wasted light and minimizing light trespass and upward emissions. The D6 is an environmentally friendly lighting solution as it contains no mercury or lead. It is an excellent solution for communities that wish to convert their existing lighting systems as it offers substantial energy and maintenance cost savings as well as minimizes waste in landfills.

⚠ WARNING

PLEASE READ ALL INSTRUCTIONS BEFORE ATTEMPTING INSTALLATION

- TO PREVENT PERSONAL INJURY OR PRODUCT DAMAGE ONLY LICENSED ELECTRICIANS SHOULD PROVIDE ALL INSTALLATION SERVICES.
- FAILURE TO INSTALL THIS PRODUCT IN ACCORDANCE WITH THE NATIONAL ELECTRIC CODE (NEC), OR THE CANADIAN ELECTRICAL CODE (CSA 22.1), ALL APPLICABLE FEDERAL, STATE AND LOCAL ELECTRIC CODES AS WELL AS THE SPECIFIC UNDERWRITERS LABORATORIES (UL) SAFETY STANDARDS FOR THE INSTALLATION, LOCATION AND APPLICATION MAY CAUSE UNSAFE SITUATIONS LEADING TO SERIOUS PERSONAL INJURY, DEATH, PROPERTY DAMAGE AND/OR PRODUCT MALFUNCTION.
- TO AVOID ELECTRIC SHOCK OR COMPONENT DAMAGE DISCONNECT POWER BEFORE ATTEMPTING INSTALLATION OR SERVICING.
- INSTALLATION MUST BE STRUCTURALLY SOUND AS TO PREVENT DAMAGE OR PERSONAL INJURY DUE TO FIXTURE COLLAPSE.
- USE CAUTION WHEN HANDLING THIS PRODUCT DURING OR AFTER OPERATION AS IT MAY BECOME HOT AND CAUSE BURNS. DISCONNECT PRODUCT AND ALLOW COOLING PRIOR TO SERVICING.
- ANY ALTERATION OR MODIFICATION OF THIS PRODUCT IS EXPRESSLY FORBIDDEN AS IT MAY CAUSE SERIOUS PERSONAL INJURY, DEATH, PROPERTY DAMAGE AND/OR PRODUCT MALFUNCTION.
- TO PREVENT PRODUCT MALFUNCTION AND / OR ELECTRICAL SHOCK THIS PRODUCT MUST BE PROPERLY GROUNDED.
- DO NOT MAKE OR ALTER ANY OPEN HOLES IN AN ENCLOSURE OF WIRING OR ELECTRICAL COMPONENTS DURING KIT INSTALLATION.
- TO PREVENT WIRING DAMAGE OR ABRASION, DO NOT EXPOSE WIRING TO EDGES OF SHEET METAL OR OTHER SHARP OBJECTS.
- TO PREVENT RISK OF FIRE OR ELECTRIC SHOCK. INSTALL THIS KIT ONLY IN THE LUMINARIES THAT HAVE THE CONSTRUCTION FEATURES AND DIMENSIONS SHOWN IN THE PHOTOGRAPHS AND/OR DRAWINGS.

NOTICE

- This device complies with part 15 of the FCC Rules. Operation is subject to the following two conditions: (1) This device may not cause harmful interference, and (2) this device must accept any interference received, including interference that may cause undesired operation.
- Even though this product may continue to light after the lens is cracked or broken, or after the specified lifetime has passed, it must be replaced in order to maintain appropriate light levels.
- Failure of fixture to provide sufficient weather protection voids warranty.
- To prevent early product failure, this product should be installed in operating environments with maximum mean ambient operating temperature for LED Retrofit Module: 104°F (40°C); maximum ambient operating temperature cannot exceed 140°F (60°C).
- Installation requirements may vary depending on the luminaire retrofitted.
- Incorrect electrical polarity may damage the module.
- If installed in fixture other than acorn or shoebox, contact UL customer service department at (877) 854-3577 to certify retrofitted fixture.

SYLVANIA

ECM 4:
Integrated and New Energy Management Systems

ECM Overview

Ameresco proposes to install new DDC controls and expand upon the existing Energy Management System (EMS) at all schools in the Wayne Township Public School District (District). The proposed EMSs will be "open protocol" based on the Niagara TridiumAX platform and BACnet communication protocol. The new system will be "interoperable" with other manufacturer's products. This feature will allow BACnet products from other vendors to be installed as the system is maintained or expanded in the future. The proposed EMSs will control most of the existing pneumatic control system at each building and tie into existing digital control system. The proposed EMS will be accessible from any internet-enabled personal computer with web browsing software. This new EMS will provide reduced energy consumption, increase system reliability and improve occupant comfort for all District facilities listed to receive a new EMS.

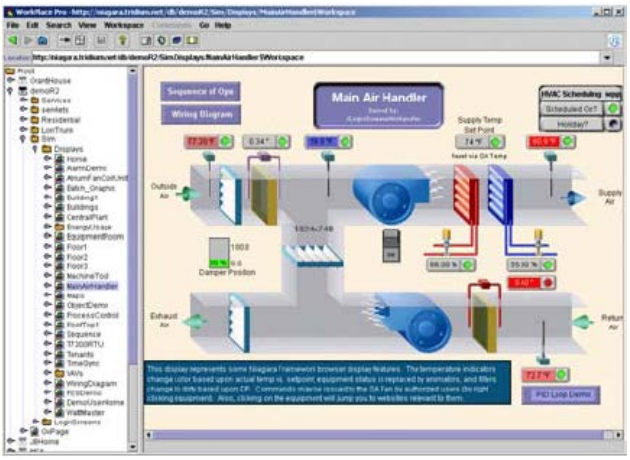

Figure 4.1: Typical graphical interface to be provided with the Johnson Controls Facility Explorer system

Ameresco proposes to integrate existing pneumatics and install a new, networked Direct Digital Control (DDC) energy management system (EMS) throughout the District based on the TridiumAX platform with BACnet controllers. Existing DDC systems will be updated and integrated into the new EMS, making a seamless interface between systems. The proposed EMS will be "open protocol" and "interoperable" with many other manufacturers' products. This feature will allow products from almost any vendor to be installed as the system is maintained and expanded in the future. The proposed EMS will be accessible from any Internet-enabled personal computer with web browsing software. The EMS will provide reduced energy consumption, increase system reliability and improve occupant comfort.

ECM Detail

Existing System

The schools throughout the District have mixed Direct Digital Control (DDC) and pneumatic temperature control systems (TCS) with (DDC) in each boiler and mechanical room.

"Page content is subject to Confidentiality Restrictions"

Wayne Valley, Anthony Wayne, Schuyler Coalfax, and James Fallon schools each has a Johnsons Controls (Metasys) Controls system installed, in these four schools the majority of the HVAC equipment and classroom unit ventilators have been networked into the existing DDC system.

Almost all existing class room UVs and all perimeter fin tube and cabinet heaters remain pneumatically controlled. In general, some of the boiler rooms have been upgraded with some DDC controls. These existing DDC will be networked into the new system.

Most schools have the original pneumatic automatic temperature control systems with varying degrees of operability. Compressed air provides the power for these systems. Most of the pneumatic controls are in fair to poor condition. Much of the HVAC equipment is not currently being controlled.

Building	Existing Control System Front End
Randall Carter-Elementary School	JCI Metasys & Pneumatics
Theunis Dey-Elementary School	Pneumatics & local thermostats
James Fallon-Elementary School	JCI Metasys
John F. Kennedy-Elementary School	Pneumatics
Lafayette-Elementary School	Pneumatics
Packanack-Elementary School	Pneumatics
Pines Lake-Elementary School	Pneumatics
Ryerson-Elementary School	JCI Metasys & Pneumatics
Albert Payson Terhune-Elementary School	Pneumatics
Anthony Wayne-Middle School	JCI Metasys
Schuyler-Colfax-Middle School	JCI Metasys
George Washington-Middle School	Local thermostats
Wayne Hills-High School	JCI Metasys & Pneumatics
Wayne Valley-High School	JCI Metasys
Preakness (Library Community Center)	Pneumatics
Board of Ed Administration	Pneumatics

Table 4.1: Existing Building Systems

The District facility staff maintains all buildings systems. Subcontracted maintenance is provided on a time and material basis.

- *Randall Carter Elementary School:*

Carter Elementary School has an existing DDC system, which controls the existing boiler plant. The remaining building has pneumatic temperature control, which controls twenty-seven classroom unit ventilators.

- *Theunis Dey-Elementary School:*

Dey Elementary School has no existing DDC system. The building has a pneumatic temperature control, which controls the existing boiler plant, seven perimeter radiation zones, four cabinet heaters, two H&V units, and twenty-one classroom unit ventilators. The new addition roof top units are under the control of local thermostats.

- *James Fallon Elementary School:*

Fallon Elementary School has an existing DDC system, which controls the existing boiler plant, and controls nineteen UVs , three perimeter radiation zones, ten exhaust fans, six air handling units, and three roof top units.

- *John Kennedy Elementary School:*

Kennedy Elementary School has no existing DDC system. The building has a pneumatic temperature control, which controls the existing boiler plant, and controls seven perimeter radiation zones, seven cabinet heaters, one H&V unit, twenty-three classroom unit ventilators. The two air handling units are under the control of local thermostats.

- *Lafayette Elementary School:*

Lafayette Elementary School has no existing DDC system. The building has a pneumatic temperature control, which controls the existing boiler plant, and three zones, ten cabinet heaters, one steam-to-hot water heat exchanger and twenty-two classroom unit ventilators.

- *Packanack Elementary School:*

Packanack Elementary School has no existing DDC system. The building has a pneumatic temperature control, which controls the existing boiler plant, and controls five perimeter radiation zones, ten cabinet heaters, and thirty classroom unit ventilators. The air handling unit is under the control of a local thermostat.

- *Pines lake-Elementary School:*

Pines Lake Elementary School has no existing DDC system. The building has a pneumatic temperature control, which controls the existing boiler plant, two H&V units, one steam-to-hot water heat exchanger, and eleven classroom unit ventilators. The air handling units are under the control of local thermostats.

- *Ryerson Elementary School:*

Ryerson Elementary School has existing DDC system controlling the roof top unit serving the Media Center. The building has a pneumatic temperature control, which controls the existing boiler plant, and controls five perimeter radiation zones, four cabinet heaters, one H&V unit, and twenty-nine classroom unit ventilators.

"Page content is subject to Confidentiality Restrictions"

- *Terhune-Elementary School:*

Terhune Elementary School has no existing DDC system. The building has a pneumatic temperature control, which controls the existing boiler plant, and controls seven perimeter radiation zones, four cabinet heaters, two H&V units, four pneumatic zones, and twenty-two classroom unit ventilators. The air handling unit is under the control of local thermostats.

- *Anthony Wayne Middle School*

Wayne Middle School has an existing DDC system controlling the entire school.

- *Schuyler Coalfax Middle School*

Coalfax Middle has an existing DDC system controlling the entire school.

- *George Washington Middle School:*

Washington Middle School has no existing DDC system. The building has local electric temperature controls, which controls the existing boiler plant, 16 perimeter radiation zones, sixteen exhaust fans, fifteen cabinet unit heaters, eight H&V units, three air handling units, and twenty-seven unit ventilators.

- *Wayne Hills High School:*

Hills High School has an existing DDC system, which partially controls the boiler plants and chiller plants, and controls thirty-one unit ventilators, four exhaust fans, two multizone roof top units, two constant volume roof top units. The rest of the building has a pneumatic temperature control, which controls forty perimeter radiation zones, twelve pneumatic zones, thirty-eight cabinet heaters, six H&V units, eight air handling units, two roof top units, and three hot water circulating pumps.

- *Wayne Valley High School*

Valley High School has an existing DDC system controlling the entire school.

- *Preakness Library/School:*

Preakness has an Automatic Logic controller controlling the boiler plans and local thermostats control few class room unit ventilators. The rest of the building has a pneumatic temperature control, which controls the library and offices. The Roof top units are controlled by local thermostats.

"Page content is subject to Confidentiality Restrictions"

- *Board of Education Administration Building:*

The Administration building lower level is heated and cooled by a roof top unit. The upper level is heated and cooled by fan coils and few split system units. The staff switches over the (two-pipe system) boiler/chiller based on seasonal demands.

Proposed System

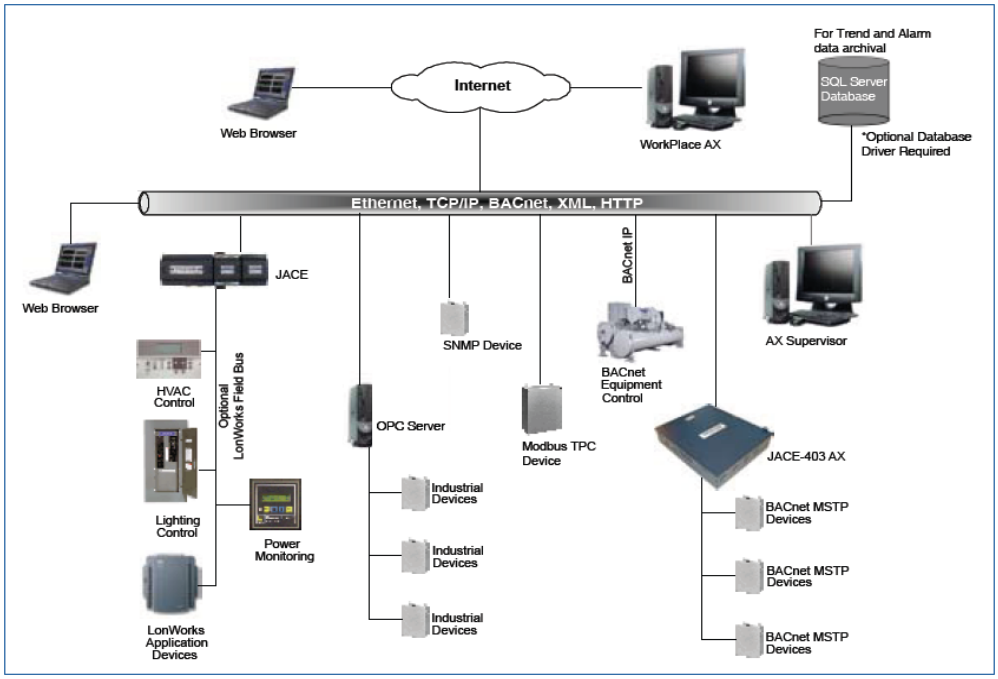

Figure 4.3: Typical DDC building management system configuration.

Ameresco is proposing an "open protocol" energy management system with Tridium's Niagara^{AX} Framework and will incorporate approximately 1,212 new points of control and integrate 2,873 existing control points. The open protocol specification will allow the District to connect products from almost any BACnet™ vendor to the proposed system, in addition to other systems based on MODBUS or JCI N2. Future upgrades and expansions can be competitively bid and will not be limited to the products of any one manufacturer. Ameresco has no commercial alliance with any EMS vendor and considers all applicable products. Ameresco believes the District's interests would be best served with an open protocol EMS architecture Ameresco proposes to upgrade to the new Tridium AX series platform to provide the District with one seamless Energy Management System. In addition Ameresco has included the installation of a central EMS server to allow for expanded data storage capability and control. The District will not need to connect to each school individually as they currently do. This will allow for extend data analysis, troubleshooting equipment and report and alarm management.

An Internet interface will allow an operator to access EMS information through standard web browser software from any computer connected to the Internet. For example, an operator could check boiler status at a school from his web-enabled home computer using Microsoft Explorer™ or any other standard web

"Page content is subject to Confidentiality Restrictions"

browser. The "heart" of the Internet connectivity at each school is the JACE and the central server located at the High School. This device will be connected to each school's communications infrastructure. Any authenticated user can connect to this secure server from anywhere at any time by using the web browser on any personal computer with Internet accessibility.

General control details for all buildings are described in the following for specific points being control or installed by building please refer to the appendices of this document.

EMS General Details

The new EMS system will provide the following for each building within the District.

- Occupied/unoccupied and holiday programming
- Hot water reset control based on OAT Start/stop and status control of existing boilers
- Enable/disable control and status of domestic hot water pump
- Start/stop, scheduling and status control of existing exhaust fans
- Remote access via the Internet or any District computer
- Web-based graphical interface
- Email delivery of alarm conditions
- Web server to provide centralized access and archiving of trends and alarms
- Outside air temperature monitoring

The proposed EMS will implement the following energy management strategies as appropriate:

- *Unoccupied Zone Temperature Reset*

Ameresco proposes to fully implement unoccupied zone temperature reset. Zone temperature set points will be varied based on occupancy schedules. Unoccupied zone temperature reset is currently implemented by existing control systems, and will be implemented for existing pneumatic systems. The addition of numerous DDC zone sensors in all schools will permit more accurate temperature control. More accurate sensing and control will permit maximum unoccupied reset savings. Table 4.2 lists the proposed set points. These set points are proposed for all unoccupied periods.

	Cooling (ºF)	Heating (ºF)
Unoccupied	85.0	55.0

Table 4.2: Proposed Temperature Setpoints

- *General Zone and Special Area Event Scheduling*

Ameresco proposes to provide operating schedule software for all controlled spaces. For example, during unoccupied periods, areas can be maintained in unoccupied status. This software will permit complicated event scheduling for specifics zones in any building. For example, an "auditorium event" will schedule auditorium air handling units on for the occupied periods only while the remainder of the building is in unoccupied mode.

- *Equipment Control and Status*

Ameresco proposes to control HVAC equipment and provide feedback on operating status. All boilers will be enabled by the EMS and operate on their packaged controls. Boilers will be lead/lag. Supply and exhaust fans will be controlled. Equipment status will be provided to prove operation for all major equipment.

- *Fault and Exception Alarming*

Ameresco proposes to provide fault or exception alarming for HVAC equipment. Equipment operation status will be proved by sensors operation; a commanded "ON" will result in a proved "ON" or an alarm will be generated. An alarm list will be maintained in a database to provide maintenance information to operators in real time. Operators will save significant time by addressing needs as indicated by the EMS. During non-working hours the EMS will have the capability of paging operators automatically to announce system faults.

Building Specific EMS Details

• Carter Elementary School

Carter Elementary School will receive an Open Protocol Web Accessible Direct Digital Control System and approximately 45 hardware points will be integrated or added. The existing controllers will be upgraded to a Tridiumax Platform.

The proposed EMS scope of work for this building includes the following:

New points of control (28 points)

- (16) Exhaust Fans (16 Points)
  - Start/stop
- (1) kitchen Make-Up Air Unit (8 Points)
  - Supply fan stop/start and status
  - Space temperature
  - Discharge air temperature
  - Heating/cooling control
  - Freezestat
  - Outside air damper
- (1) Steam to hot water heat exchanger (4) Points
  - Steam control valve

- 3-way mixing valve
- Convertor hot water supply temperature
- Convertor hot water return temperature

Existing DDC points of control to be integrated into new system (17 points)

- (1) Outside air temperature (1 point)
- (2) Steam boilers (8 points)
  - Enable/Disable and status
  - Boiler critical alarm
  - Outside air
  - Combustion air damper
- (2) Hot water circulating pumps (8 points)
  - Enable/Disable
  - Status
  - Zone Valve
  - Steam header pressure
  - Hot water supply temperature
  - Hot water return temperature

• *Theunis Dey-Elementary School:*

Dey Elementary School will receive an Open Protocol Web Accessible Direct Digital Control System and approximately 97 hardware points will be integrated or added. The existing controllers will be upgraded to a Tridium Platform.

The proposed EMS scope of work for this building includes the following:

New points of control (97 points)

- Control (7) Existing Pneumatic Radiation Zones (14 Points)
  - Space temperature
  - Heating control valve
- (14) Exhaust Fans (14 Points)
  - Start/stop
- (6) Heat pumps (12 Points)
  - Supply fan stop/start
  - Space temperature
- (4) Cabinet heaters (12 Points)
  - Supply fan stop/start
  - Space temperature
  - Heating valve
- (1) kitchen Make-Up Air Unit (8 Points)
  - Supply fan stop/start and status
  - Space temperature

  - Discharge air temperature
  - Heating/cooling control
  - Freezestat
  - Outside air damper
- (2) Heating and Ventilation (14 Points)
  - Supply fan stop/start and status
  - Space temperature sensor
  - Discharge air temperature
  - Heating valve
  - Outside air and return air dampers
  - Freezestat
- (2) Roof Top Units (4 Points)
  - Supply fan stop/start
  - Space temperature
- (2) Hot water boilers (11 points)
  - Enable/Disable and status
  - Boiler critical alarm
  - Outside air
  - Combustion air damper
  - Hot water supply temperature
  - Hot water return temperature
- (4) Hot water circulating pumps (8 points)
  - Enable/Disable
  - Status

• *James Fallon-Elementary School:*

Fallon Elementary School will receive an Open Protocol Web Accessible Direct Digital Control System and approximately 276 hardware points will be integrated or added. The existing controllers will be upgraded to a Tridiumax Platform. Existing classroom unit ventilators will all be integrated into the new DDC controls.
Existing DDC points of control to be integrated into new system (276 points)

- (19) Unit ventilators (133 Points)
  - Stop/start and status
  - Space temperature sensor
  - Discharge air temperature
  - Heating valve
  - Freezestat
  - Outside air/Return air dampers
  - Perimeter radiation valve
- (3) Existing Radiation Zones (6 Points)
  - Space Temperature
  - Heating control valve
- (10) Exhaust Fans (10 Points)
  - Start/stop
- (6) Air Handling Units (66 Points)
  - Supply fan stop/start
  - Space temperature

  - Discharge air temperature
  - Mixed air temperature
  - Return air temperature
  - Heating valve
  - Cooling valve
  - Freezestat
  - Outside/Return air dampers
- (3) Roof Top Unit (30 Points)
  - Supply fan stop/start
  - Space temperature
  - Discharge air temperature
  - Heating valve
  - Cooling valve
  - Freezestat
  - Outside/Return air dampers.
- (3) hot Water boilers (27 points)
  - Enable/Disable and status
  - Boiler critical alarm
  - Outside air
  - Hot water supply temperature
  - Hot water return temperature
- (2) Heating water circulating pumps (4 points)
  - Enable/Disable for each
  - Status

• *John Kennedy-Elementary School:*

Kennedy Elementary School will receive an Open Protocol Web Accessible Direct Digital Control System and approximately 82 hardware points will be integrated or added. The existing controllers will be upgraded to a Tridiumax Platform.

The proposed EMS scope of work for this building includes the following:

New points of control (82 points)

- Control (7) Existing Pneumatic Zones (14 Points)
  - Space Temperature
  - Heating control valve
- (7) Exhaust Fans (7 Points)
  - Start/stop
- (3) Heat pumps (3 Points)
  - Start/stop
- (7) Cabinet heaters (21 Points)
  - Supply fan stop/start
  - Space temperature
  - Heating valve

- (1) Heating and Ventilation (7 Points)
  - Supply fan stop/start and status
  - Space temperature sensor
  - Discharge air temperature
  - Heating valve
  - Freezestat
  - Outside air and return air dampers
- (2) Air Handling Units (16 Points)
  - Supply fan stop/start
  - Space temperature
  - Discharge air temperature
  - Heating valve
  - Cooling valve
  - Freezestat
  - Outside/Return air dampers.
- (2) Hot water boilers (10 points)
  - Enable/Disable and status
  - 3-Way mixing valve
  - Boiler critical alarm
  - Outside air
  - Combustion air damper
  - Hot water supply temperature
  - Hot water return temperature
- (2) Hot water circulating pumps (4 points)
  - Enable/Disable
  - Status

• Lafayette Elementary School

Lafayette Elementary School will receive an Open Protocol Web Accessible Direct Digital Control System and approximately 75 hardware points will be integrated or added. The existing controllers will be upgraded to a Tridiumax Platform.

The proposed EMS scope of work for this building includes the following:

New points of control (75 points)

- Control (3) Existing Pneumatic Zones (6 Points)
  - Space Temperature
  - Heating control valve
- (19) Exhaust Fans (19 Points)
  - Start/stop
- (4) Heat pumps (4 Points)
  - Start/stop
- (10) Cabinet heaters (30 Points)
  - Supply fan stop/start
  - Space temperature

  - Heating valve
- (2) Steam boilers (8 points)
  - Enable/Disable and status
  - Boiler critical alarm
  - Outside air
  - Steam header pressure
- (1) Steam to hot water heat exchanger (4) Points
  - Steam control valve
  - 3-way mixing valve
  - Convertor hot water supply temperature
  - Convertor hot water return temperature
- (2) Hot water circulating pumps (4points)
  - Enable/Disable
  - Status

• Packanack Elementary School

Packanack Elementary School will receive an Open Protocol Web Accessible Direct Digital Control System and approximately 72 hardware points will be integrated or added. The existing controllers will be upgraded to a Tridiumax Platform.

The proposed EMS scope of work for this building includes the following:

New points of control (72 points)

- (Control (5) Existing Pneumatic Zones (10 Points)
  - Space Temperature
  - Heating control valve
- (7) Exhaust Fans (7 Points)
  - Start/stop
- (4) Heat pumps (4 Points)
  - Start/stop
- (10) Cabinet heaters (30 Points)
  - Supply fan stop/start
  - Space temperature
  - Heating valve
- (1) Air Handling Units (9 Points)
  - Supply fan stop/start
  - Space temperature
  - Discharge/Return/Mixed air temperature
  - Heating valve
  - Cooling valve
  - Freezestat
  - Outside/Return air dampers.
- (3) Steam boilers (12 points)
  - Enable/Disable and status

"Page content is subject to Confidentiality Restrictions"

- Boiler critical alarm
- Outside air
- Combustion air damper

• Pines Lake Elementary School

Pines Lake Elementary School will receive an Open Protocol Web Accessible Direct Digital Control System and approximately 77 hardware points will be integrated or added. The existing controllers will be upgraded to a Tridiumax Platform.

The proposed EMS scope of work for this building includes the following:

New points of control (77 points)

- (19) Exhaust Fans (19 Points)
  - Start/stop
- (9) Heat pumps (9 Points)
  - Start/stop
- (2) Heating and Ventilation (14 Points)
  - Supply fan stop/start and status
  - Space temperature sensor
  - Discharge air temperature
  - Heating valve
  - Freezestat
  - Outside air and return air dampers
- (2) Air Handling Units (18 Points)
  - Supply fan stop/start
  - Space temperature
  - Discharge air temperature
  - Heating valve
  - Cooling valve
  - Freezestat
  - Outside/Return air dampers.
- (2) Steam boilers (9 points)
  - Enable/Disable and status
  - Boiler critical alarm
  - Outside air
  - Steam zone valve
  - Steam header pressure
- (1) Steam-to-hot water heat exchanger (4) Points
  - Steam control valve
  - 3-way mixing valve
  - Convertor hot water supply temperature
  - Convertor hot water return temperature
- (2) Hot water circulating pumps (4 points)
  - Enable/Disable
  - Status

• Ryerson Elementary School

Ryerson Elementary School will receive an Open Protocol Web Accessible Direct Digital Control System and approximately 62 hardware points will be integrated or added. The existing controllers will be upgraded to a Tridiumax Platform.

The proposed EMS scope of work for this building includes the following:

New points of control (54 points)

- Control (5) Existing Pneumatic Zones (10 Points)
  - Space Temperature
  - Heating control valve
- (6) Exhaust Fans (6 Points)
  - Start/stop
- (4) Cabinet heaters (12 Points)
  - Supply fan stop/start
  - Space temperature
  - Heating valve
- (1) Heating and Ventilation (9 Points)
  - Supply fan stop/start and status
  - Space temperature sensor
  - Discharge air temperature
  - Heating valve
  - Freezestat
  - Outside air and return air dampers
- (2) Hot water boilers (9 points)
  - Enable/Disable and status
  - Boiler critical alarm
  - Hot water supply temperature
  - Hot water return temperature
  - Outside air
- (4) Hot water circulating pumps (8 points)
  - Enable/Disable
  - Status

Existing points to be integrated into new system (8 points)

- (1) Roof Top Unit (8 Points)
  - Supply fan stop/start
  - Space temperature
  - Discharge air temperature
  - Heating valve
  - Cooling valve
  - Freezestat
  - Outside/Return air dampers.

• Terhune Elementary School

Terhune Elementary School will receive an Open Protocol Web Accessible Direct Digital Control System and approximately 91 hardware points will be integrated or added. The existing controllers will be upgraded to a Tridiumax Platform.

The proposed EMS scope of work for this building includes the following:

New points of control (91 points)

- Control (7) Existing Perimeter Radiation Zones (14 Points)
  - Space Temperature
  - Heating control valve
- (9) Exhaust Fans (9 Points)
  - Start/stop
- (9) Heat pumps (9Points)
  - Start/stop
- (4) Cabinet heaters (12 Points)
  - Supply fan stop/start
  - Space temperature
  - Heating valve
- (3) Dayton Electric Heaters (6 Points)
  - Start/stop
  - Space Temperature
- (2) Heating and Ventilation (14 Points)
  - Supply fan stop/start and status
  - Space temperature sensor
  - Discharge air temperature
  - Heating valve
  - Freezestat
  - Outside air and return air dampers
- (1) Air Handling Unit (8 Points)
  - Supply fan stop/start
  - Space temperature
  - Discharge air temperature
  - Heating valve
  - Cooling valve
  - Freezestat
  - Outside/Return air dampers.
- (2) Hot water boilers (10 points)
  - Enable/Disable and status
  - Boiler critical alarm
  - 3-Way mixing valve
  - Hot water supply temperature
  - Hot water return temperature
  - Outside air
- (4) Existing Pneumatic Zones (8 Points)

"Page content is subject to Confidentiality Restrictions"

  - Space Temperature
  - Heating control valve
- (2) Hot water circulating pumps (4 points)
  - Enable/Disable
  - Status

• Anthony Wayne Middle School

Wayne School will receive an Open Protocol Web Accessible Direct Digital Control System and approximately 754 hardware points will be integrated or added. The existing controllers will be upgraded to a Tridiumax Platform. Existing classroom unit ventilators will all be integrated into the new DDC controls.

The proposed EMS scope of work for this building includes the following:

Existing DDC points of control to be integrated into new system (754 points)

- (58) VAV Box (348 Points)
  - Stop/start and status
  - Space Temperature
  - Discharge air temperature
  - Heating control
  - VAV dampers
- (15) Perimeter Radiation Zones (30 Points)
  - Space Temperature
  - Heating control valve
- (23) Variable Volume Roof Top Units (253 Points)
  - Supply fan stop/start and status
  - Duct static pressure
  - Space Temperature
  - Discharge/Return/Mixed air temperature
  - Heating control valve
  - Cooling control valve
  - Freezestat
  - Outside/Return air dampers.
- (3) Heat Recovery Units (36 Points)
  - Supply fan stop/start and status
  - Exhaust fan stop/start and status
  - Space Temperature
  - Discharge/Return/Mixed and Exhaust air temperature
  - Wheel inlet Temperature
  - Freezestat
  - Outside/Return/Exhaust air dampers.
- (32) General Exhaust Fans (64 points)
  - Stop/start for each
- (4) hot Water boilers (15 points)

"Page content is subject to Confidentiality Restrictions"

  - Enable/Disable and status
  - Boiler critical alarm
  - Outside air
  - Hot water supply temperature
  - Hot water return temperature
- (4) Heating water circulating pumps (8 points)
  - Enable/Disable for each
  - Status

• Schuyler Coalfax Middle School

Coalfax Middle School will receive an Open Protocol Web Accessible Direct Digital Control System and approximately 380 hardware points will be integrated or added. The existing controllers will be upgraded to a Tridiumax Platform.

The proposed EMS scope of work for this building includes the following:

Existing DDC points of control to be integrated into new system (380points)

- (29) Unit ventilators (203 Points)
  - Stop/start and status
  - Space temperature sensor
  - Discharge air temperature
  - Heating valve
  - Freezestat
  - Outside air/Return air dampers
- (19) Heating and Ventilation (133 Points)
  - Stop/start and status
  - Space temperature sensor
  - Discharge air temperature
  - Heating valve
  - Freezestat
  - Outside air/Return air dampers
- (3) Roof Top Units (24 Points)
  - Supply fan stop/start
  - Space temperature
  - Discharge air temperature
  - Heating valve
  - Cooling valve
  - Freezestat
  - Outside/Return air dampers.
- (2) Hot water boilers (10 points)
  - Enable/Disable and status
  - Boiler critical alarm
  - 3-Way mixing valve
  - Outside air
  - Hot water supply temperature
  - Hot water return temperature

"Page content is subject to Confidentiality Restrictions"

- (5) Hot water circulating pumps (10 points)
  - Enable/Disable
  - Status

• George Washington Middle School:

Washington Middle School will receive an Open Protocol Web Accessible Direct Digital Control System and approximately 196 hardware points will be integrated or added. The existing controllers will be upgraded to a Tridiumax Platform.

The proposed EMS scope of work for this building includes the following:

New points of control (198 points)

- Control (16) Existing Perimeter radiation zones (32 Points)
  - Space Temperature
  - Heating control valve
- (16) Exhaust Fans (16 Points)
  - Start/stop
- (15) Cabinet heaters (45 Points)
  - Supply fan stop/start
  - Space temperature
  - Heating valve
- (8) Heating and Ventilation (56 Points)
  - Supply fan stop/start and status
  - Space temperature sensor
  - Discharge air temperature
  - Heating valve
  - Freezestat
  - Outside air and return air dampers
- (3) Air Handling Unit (24 Points)
  - Supply fan stop/start
  - Space temperature
  - Discharge air temperature
  - Heating valve
  - Cooling valve
  - Freezestat
  - Outside/Return air dampers.
- (2) Hot water boilers (17 points)
  - Enable/Disable and status
  - Boiler critical alarm
  - Outside air
  - Hot water supply temperature
  - Hot water return temperature
  - (8) Pneumatic zones
- (3) Hot water circulating pumps (6 points)

"Page content is subject to Confidentiality Restrictions"

- Enable/Disable
- Status

• Wayne Hills High School:

Wayne Hills High School will receive an Open Protocol Web Accessible Direct Digital Control System and approximately 691 hardware points will be integrated or added. The existing controllers will be upgraded to a Tridiumax Platform.

The proposed EMS scope of work for this building includes the following:

New points of control (364 points)

- Control (40) Existing Perimeter Radiation Zones (80 Points)
  - Space Temperature
  - Heating valve
- (18) Exhaust Fans (18 Points)
  - Start/stop
- (12) Existing Pneumatic Zones (24 Points)
  - Space temperature
  - Heating control valve
- (38) Cabinet heaters (114 Points)
  - Supply fan stop/start
  - Space temperature
  - Heating valve
- (6) Heating and Ventilation (42 Points)
  - Supply fan stop/start and status
  - Space temperature sensor
  - Discharge air temperature
  - Heating valve
  - Freezestat
  - Outside air and return air dampers
- (8) Air Handling Unit (64 Points)
  - Supply fan stop/start
  - Space temperature
  - Discharge air temperature
  - Heating valve
  - Cooling valve
  - Freezestat
  - Outside/Return air dampers.
- (2) Roof Top Unit (16 Points)
  - Supply fan stop/start and status
  - Space temperature
  - Discharge air temperature
  - Heating valve
  - Cooling valve
  - Freezestat

"Page content is subject to Confidentiality Restrictions"

  - Outside/Return air dampers
- (3) Hot water circulating pumps (6 points)
  - Enable/Disable
  - Status

Existing DDC points of control to be integrated into new system (327points)

- (31) Unit ventilators (248 Points)
  - Stop/start and status
  - Space temperature sensor
  - Discharge air temperature
  - Heating valve
  - Freezestat
  - Outside air/Return air dampers
  - Perimeter radiation valve
- (4) Exhaust Fans (8 Points)
  - Start/stop
  - Status
- (2) Multizone Roof Top Units (29 Points)
  - Supply fan stop/start
  - Space temperature
  - Discharge air temperature
  - Heating valve
  - Cooling valve
  - Freezestat
  - Outside/Return air dampers.
- (2) Roof Top Unit (16 Points)
  - Supply fan stop/start
  - Space temperature
  - Discharge air temperature
  - Heating valve
  - Cooling valve
  - Freezestat
  - Outside/Return air dampers
- (3) Hot water boilers (12 points)
  - Enable/Disable and status
  - Boiler critical alarm
  - Outside air
  - Hot water supply temperature
  - Hot water return temperature
- (2) Hot water circulating pumps (4 points)
  - Enable/Disable
  - Status
- (1) Chiller (4 points)
  - Enable/Disable and status
  - Chilled water supply temperature
  - Chilled water return temperature

"Page content is subject to Confidentiality Restrictions"

- (1) Remote condensing unit (2 points)
  - Enable/Disable
  - Status
- (2) Chilled water circulating pumps (4 points)
  - Enable/Disable
  - Status

• Wayne Valley High School:

Valley High School will receive an Open Protocol Web Accessible Direct Digital Control System and approximately 1111 hardware points will be integrated or added. The existing controllers will be upgraded to a Tridiumax Platform.

The proposed EMS scope of work for this building includes the following:

- ***Existing DDC points of control to be integrated into new system (1111 points)***

- (99) Unit ventilators (693 Points)
  - Stop/start and status
  - Space temperature sensor
  - Discharge air temperature
  - Heating valve
  - Freezestat
  - Outside air/Return air dampers
- (131) Exhaust Fans (131 Points)
  - Start/stop
- (25) Heating and Ventilation (175 Points)
  - Supply fan stop/start and status
  - Space temperature sensor
  - Discharge air temperature
  - Heating valve
  - Freezestat
  - Outside air and return air dampers
- (8) Air Handling Unit (64 Points)
  - Supply fan stop/start
  - Space temperature
  - Discharge air temperature
  - Heating valve
  - Cooling valve
  - Freezestat
  - Outside/Return air dampers
- (2) Steam boilers (8 points)
  - Enable/Disable and status
  - Boiler critical alarm
  - Steam header pressure
  - Outside air

- (1) Existing Pneumatic Zones (2 Points)
  - Space temperature
  - Heating valve
- (2) Hot water boilers (6 points)
  - Enable/Disable and status
  - Hot water supply temperature
  - Hot water return temperature
- (4) Hot water circulating pumps (8 points)
  - Enable/Disable
  - Status
- (1) Vacuum return pump (2 points)
  - Enable/Disable
  - Status
- (1) Steam-to-hot water heat exchanger (6) Points
  - 3-way control valve
  - Convertor hot water supply temperature
  - Convertor hot water return temperature
- (4) Convertor water circulating pumps (8 points)
  - Enable/Disable
  - Status
- (1) Chiller (4 points)
  - Enable/Disable and status
  - Chilled water supply temperature
  - Chilled water return temperature
- (2) Chilled water circulating pumps (4 points)
  - Enable/Disable
  - Status

• Preakness School/Library

Preakness will receive an Open Protocol Web Accessible Direct Digital Control System and approximately 52 hardware points will be integrated or added. The existing controllers will be upgraded to a Tridiumax Platform. Existing classroom unit ventilators will all be integrated into the new DDC controls.

The proposed EMS scope of work for this building includes the following:

New points of control (52 points)

- (7) Exhaust Fans (7 Points)
  - Start/stop
- (4) Roof Top Unit (32 Points)
  - Supply fan stop/start and status
  - Space temperature
  - Discharge air temperature
  - Heating valve
  - Cooling valve

  - Freezestat
- (1) Steam boilers (5 points)
  - Enable/Disable and status
  - Boiler critical alarm
  - Steam header pressure
  - Outside air
- (1) Steam-to-hot water heat exchanger (4) Points
  - Convertor steam control valve
  - 3-way control valve
  - Convertor hot water supply temperature
  - Convertor hot water return temperature
- (2) Convertor water circulating pumps (4 points)
  - Enable/Disable
  - Status

- *Board of Education Building*

The Administration Building will receive an Open Protocol Web Accessible Direct Digital Control System and approximately 24 hardware points will be integrated or added.

The proposed EMS scope of work for this building includes the following:

New points of control (24 points)

- (1) Air Handling Unit (8 Points)
  - Supply fan stop/start
  - Space temperature
  - Discharge air temperature
  - Heating valve
  - Cooling valve
  - Freezestat
  - Outside/Return air dampers
- (1) Hot water boilers (6 points)
  - Enable/Disable and status
  - Hot water reset
  - Hot water supply temperature
  - Hot water return temperature
  - Outside air conditions
- (2) Hot water circulating pumps (4 points)
  - Enable/Disable
  - Status
- (1) Chiller (4 points)
  - Enable/Disable and status
  - Chilled water supply temperature
  - Chilled water return temperature
- (1) Chilled water circulating pumps (4 points)
  - Enable/Disable
  - Status

Equipment, Design and Construction Documentation

Equipment will be identified in submittals provided to the District for approval prior to procurement. The EMS audit completed during the Comprehensive Energy Audit study phase for each facility will be submitted as the basis for the EMS build-out. The audit will include the existing control descriptions, operating hours, and proposed retrofit description. In addition, Ameresco will compile product specification sheets for all specified equipment. These documents will be submitted to the District, for review and comment. Upon approval, these will constitute the construction documents. Upon completion of the construction phase, the documents will be revised as needed to reflect "As-Built" conditions, and submitted in multiple to the District for record.

Impact on Facility Operations and Performance

The new upgraded EMS system will enhance facility operations by providing instantaneous access to equipment information. Alarms will be generated to notify facilities of items needing attention. In classrooms, hallways, shops and general administrative areas throughout all of the buildings enhanced comfort will occur due to more accurate temperature control.

"Page content is subject to Confidentiality Restrictions"

Appendix for ECM 4:
Integrated and New Energy Management Systems

I. Energy Savings Calculations

This page is intentionally left blank.

Project Template	
Energy and Demand Savings Summary	
Measure ID:	**4**
Measure Name:	**Integrated and New Energy Management Systems**
Measure Location:	
Engineers:	

Site Name:		**Carter ES**	**Dey ES**	**Fallon ES**	**Kennedy ES**	**Lafayette ES**	**Packanack ES**	**Pines Lake ES**	**Ryerson ES**	**Terhune ES**
Item	Units	Savings	Savings	Savings	Savings	Savings	Savings	Savings	Savings	Savings
Electricity										
Energy On-Peak	kWh	22,968	10,817	45,768	27,002	40,248	9,169	51,194	26,243	12,144
Energy Off-Peak	kWh									
Energy Total	kWh	22,968	10,817	45,768	27,002	40,248	9,169	51,194	26,243	12,144
Demand On-Peak, Monthly	kW									
Demand On-Peak, Annual	kW									
Demand Off-Peak, Monthly	kW									
Demand Off-Peak, Annual	kW									
Fossil Fuel										
Natural Gas (NG)	Therms	18,562	5,206	7,905	6,048	13,644	19,978	13,270	12,016	1,208
Liquid Propane Gas (LPG)	Gallons	0	0	0	0	0	0	0	0	0
Steam	Mlbs	0	0	0	0	0	0	0	0	0
Fuel Oil, #2	Gallons	0	0	0	0	0	0	0	0	0
Fuel Oil, #4	Gallons	0	0	0	0	0	0	0	0	0
Fuel Oil, #6	Gallons	0	0	0	0	0	0	0	0	0
Miscellaneous	Misc	0	0	0	0	0	0	0	0	0
Water										
Water Savings	kGallons									
Sewer										
Sewer Savings	kGallons									

Anthony Wayne MS	Colfax MS	Washington MS	Wayne Hills HS	Wayne Valley HS	Preakness	Admin	Lafayette-Mod	Pines Lake ES-Mods	Ryerson ES-Mods	Kennedy ES Mod	Colfax MS-Mods	Summary
Savings	Savings	Savings	Savings	Savings	Savings	Savings	Savings	Savings	Savings	Savings	Savings	
156,975	49,621	11,880	100,189	14,690	12,547	43,198	12,140	11,481	8,688	3,711	9,981	634,653
												0
156,975	49,621	11,880	100,189	14,690	12,547	43,198	12,140	11,481	8,688	3,711	9,981	680,653
												0.0
												0.0
												0.0
												0.0
												0
27,872	20,841	13,532	38,375	1,382	8,948	2,791						211,578
0	0	0	0	0	0	0						0
0	0	0	0	0	0	0						0
0	0	0	0	0	0	0						0
0	0	0	0	0	0	0						0
0	0	0	0	0	0	0						0
0	0	0	0	0	0	0						0
												0
												0
												0
												0

Project Template
Randall Carter-Elementary School
Integrated and New Energy Management Systems

TMY-2 Weather Data for Newark, NJ								Existing Occupancy Schedule				Existing Heating/Cooling Schedule				Existing Motor Operating Schedule				Existing				Proposed								Savings		
Amb. Temp Bin deg. F	Ave Temp deg. F	M.C.W.B deg. F	M.C. Enthalpy Btu/lbma	01-08 Hours	09-16 Hours	17-24 Hours	Total Bin Hours	Occ On-Peak Hrs.	UnOcc On-Peak Hrs.	Occ Off-Peak Hrs.	UnOcc Off-Peak Hrs.	Occ On-Peak Hrs.	UnOcc On-Peak Hrs.	Occ Off-Peak Hrs.	UnOcc Off-Peak Hrs.	Occ On-Peak Hrs.	UnOcc On-Peak Hrs.	Occ Off-Peak Hrs.	UnOcc Off-Peak Hrs.	Occ. Cool/ Heat Load (MBH)	UnOcc. Cool/ Heat Load (MBH)	Occ Cooling/Heating Energy Consump. (MMBTU)	UnOcc Cooling/Heating Energy Consump. (MMBTU)	Occ On-Peak Hrs.	UnOcc On-Peak Hrs.	Occ Off-Peak Hrs.	UnOcc Off-Peak Hrs.	Occ. Cool/ Heat Load (MBH)	UnOcc. Cool/ Heat Load (MBH)	Occ Cooling/Heating Energy Consump. (MMBTU)	UnOcc Cooling/Heating Energy Consump. (MMBTU)	Cooling Energy Savings (MMBTU)	HVAC Electrical Savings (kWh)	Heating Energy Savings (MMBTU)
A	B	C	D	E	F	G	H	I	J	K	L	M	N	O	P	Q	R	S	T	U	V	W	X	Y	Z	AA	AB	AC	AD	AE	AF	AG	AH	AI
Cooling																																		
105 to 110	107.5	0.0	0.0	0	0	0	0	0	0	0	0	0	0	0	0	0	0	0	0	181	135	0	0	0	0	0	0	181	96	0	0	0	0	
100 to 105	102.5	0.0	0.0	0	0	0	0	0	0	0	0	0	0	0	0	0	0	0	0	163	121	0	0	0	0	0	0	163	86	0	0	0	0	
95 to 100	97.5	72.2	35.7	0	5	1	6	1	1	0	4	2	0	0	4	2	0	0	4	145	108	0	0	1	1	0	4	145	77	0	0	0	10	
90 to 95	92.5	73.8	37.3	0	33	7	40	8	8	0	24	16	0	0	24	16	0	0	24	126	94	1	1	8	8	0	24	126	67	0	1	0	70	
85 to 90	87.5	71.3	35.1	0	92	30	122	25	25	0	73	48	1	0	73	48	1	0	73	108	81	2	3	25	25	0	73	108	58	1	2	1	213	
80 to 85	82.5	69.2	33.2	8	330	162	500	100	102	0	298	198	4	0	298	198	4	0	298	90	67	8	9	100	102	0	298	90	48	4	8	4	1,269	
75 to 80	77.5	67.4	31.8	98	257	265	620	125	126	0	369	246	5	0	369	246	5	0	369	72	54	8	9	125	126	0	369	72	38	4	8	4	1,203	
70 to 75	72.5	64.6	29.7	325	236	286	847	170	173	0	504	336	7	0	504	336	7	0	504	54	40	8	9	170	173	0	504	54	29	4	8	4	1,643	
65 to 70	67.5	60.9	27.0	251	204	216	671	135	137	0	399	266	5	0	399	266	5	0	399	36	27	4	5	135	137	0	399	36	19	2	4	2	1,302	
60 to 65	62.5	56.3	24.0	358	268	301	927	186	189	0	552	368	7	0	552	368	7	0	552	18	13	3	3	186	189	0	552	18	10	1	3	2	1,798	
Heating																																		
55 to 60	57.5	50.3	20.4	217	191	192	600	121	122	0	357	238	5	0	357	238	5	0	357	(355)	(270)	2	162	121	122	0	357	(312)	0	0	0		1,353	163
50 to 55	52.5	46.4	18.3	218	223	289	730	147	149	0	435	290	6	0	435	290	6	0	435	(462)	(356)	23	267	147	149	0	435	(419)	(43)	15	7		1,646	268
45 to 50	47.5	41.8	16.0	243	196	195	634	127	129	0	377	252	5	0	377	252	5	0	377	(569)	(443)	38	293	127	129	0	377	(526)	(130)	31	64		1,286	236
40 to 45	42.5	38.0	14.3	193	171	149	513	103	105	0	305	204	4	0	305	204	4	0	305	(677)	(530)	45	287	103	105	0	305	(634)	(217)	39	99		1,041	194
35 to 40	37.5	33.9	12.5	357	311	355	1,023	206	209	0	609	406	8	0	609	406	8	0	609	(784)	(617)	119	671	206	209	0	609	(741)	(304)	108	290		2,076	392
30 to 35	32.5	29.3	10.6	277	221	236	734	147	150	0	437	291	6	0	437	291	6	0	437	(892)	(704)	106	552	147	150	0	437	(849)	(391)	98	275		1,282	285
25 to 30	27.5	24.3	8.7	159	98	134	391	79	80	0	233	155	3	0	233	155	3	0	233	(999)	(791)	68	332	79	80	0	233	(956)	(478)	63	182		683	154
20 to 25	22.5	19.3	6.8	89	48	58	195	39	40	0	116	77	2	0	116	77	2	0	116	(1,107)	(878)	39	184	39	40	0	116	(1,064)	(565)	37	109		340	78
15 to 20	17.5	14.8	5.3	74	20	31	125	25	25	0	74	50	1	0	74	50	1	0	74	(1,214)	(965)	29	130	25	25	0	74	(1,171)	(652)	27	81		218	51
10 to 15	12.5	10.0	3.8	35	7	5	47	9	10	0	28	19	0	0	28	19	0	0	28	(1,322)	(1,052)	12	54	9	10	0	28	(1,279)	(739)	12	35		82	19
5 to 10	7.5	5.1	2.3	17	9	8	34	7	7	0	20	13	0	0	20	13	0	0	20	(1,429)	(1,139)	10	42	7	7	0	20	(1,386)	(826)	9	28		59	14
0 to 5	2.5	0.6	1.0	1	0	0	1	0	0	0	1	0	0	0	1	0	0	0	1	(1,536)	(1,226)	0	1	0	0	0	1	(1,493)	(913)	0	1		2	0
-5 to 0	(2.5)	0.0	0.0	0	0	0	0	0	0	0	0	0	0	0	0	0	0	0	0	(1,644)	(1,313)	0	0	0	0	0	0	(1,601)	(1,000)	0	0		0	0
-10 to -5	(7.5)	0.0	0.0	0	0	0	0	0	0	0	0	0	0	0	0	0	0	0	0	(1,751)	(1,400)	0	0	0	0	0	0	(1,708)	(1,087)	0	0		0	0
-15 to -10	(12.5)	0.0	0.0	0	0	0	0	0	0	0	0	0	0	0	0	0	0	0	0	(1,859)	(1,487)	0	0	0	0	0	0	(1,816)	(1,174)	0	0		0	0
-20 to -15	(17.5)	0.0	0.0	0	0	0	0	0	0	0	0	0	0	0	0	0	0	0	0	(1,966)	(1,574)	0	0	0	0	0	0	(1,923)	(1,261)	0	0		0	0
-25 to -20	(22.5)	0.0	0.0	0	0	0	0	0	0	0	0	0	0	0	0	0	0	0	0	(2,074)	(1,661)	0	0	0	0	0	0	(2,031)	(1,348)	0	0		0	0
				2,920	2,920	2,920	8,760	1,760	1,786	0	5,214	3,476	70	0	5,214	3,476	70	0	5,214			524	3,014	1,760	1,786	0	5,214			456	1,208	18	17,576	1,856

Cell Ref.	Comment
A-H	TMY-2 Weather Data for Newark, NJ
I - L	Existing Occupancy hours
M - P	Existing Heating/Cooling hours
Q - T	Existing Motor Operating Hours
U	Occupied Cooling and Heating loads (MBH)
V	Unoccupied Cooling and Heating loads (MBH)
W	Cooling = [col U] x ([col M] + [col O]) ÷ 1,000 ÷ AD45
	Heating = -MIN([col I] + [col K] , [col M] + [col O]) x MIN([col U] + internal gains , 0) + IF([col I] + [col K] > [col M]+[col O] , (([col I] + [col K]) - ([col M] + [col O])) x MIN([col V] + internal gains , 0) , 0) ÷ 1,000 ÷ AD44
X	Cooling = [col R] x ([col J] + [col L]) ÷ 1,000 ÷ AD45
	Heating = -([col N] + [col P]) x MIN([col V] + internal gains , 0) + IF([col I] + [col K] < [col M] + [col O] , (([col M] + [col O]) - ([col I] + [col K])) x MIN([col U] + internal gains , 0)) ÷ 1,000 ÷ AD44
Y ÷ AB	Proposed Operating hours
AC	Proposed Occupied Cooling and Heating Loads:
	Cooling = ([col B] - AC60) ÷ ([col B] - AC55) x [col U]
	Heating = ([col B] - AE60) ÷ ([col B] - AE55) x [col U]
AD	Proposed Unoccupied Cooling and Heating Loads:
	Cooling = ([col B] - AC61) ÷ ([col B] - AC56) x [col V]
	Heating = ([col B] - AE61) ÷ ([col B] - AE56) x [col V] ([col V] is modified to account for reduced kitchen and building ventilation due to EMS)
AE	Cooling = [col AC] x ([col Y] + [col AA]) ÷ 1,000 ÷ AD45
	Heating = -MIN([col I] + [col K] , [col Y] + [col AA]) x MIN([col AC] + internal gains , 0) + IF([col I] + [col K] > [col Y]+[col AA] , (([col I] + [col K]) - ([col Y] + [col AA])) x MIN([col AD] + internal gains , 0) , 0) ÷ 1,000 ÷ AD44
AF	Cooling = [col AD] x ([col Z] + [col AB]) ÷ 1,000 ÷ AD45
	Heating = -([col Z] + [col AB]) x MIN([col AD] + internal gains , 0) + IF([col I] + [col K] < [col Y] + [col AA] , (([col Y] + [col AA]) - ([col I] + [col K])) x MIN([col AC] + internal gains , 0)) ÷ 1,000 ÷ AD44
AG	÷ ([col W] + [col X]) - ([col AE] + [col AF])
	HVAC Fan and Pump Savings
AH	Cooling =([col Q] + [col S] + ([col R] + [col T]) x AD49) x (AD46 + AD48) - ((col Y] + [col AA] + ([col Z] + [col AB]) x AD49) x (AD46 + AD48)
	Heating =([col Q] + [col S]) x AD46 + IF(B20<35,([col R] + [col T]) x AD49 x AD46, IF(B20>50,0,([col R] + [col T]) x AD49 x AD46)) - (([col Y] + [col AA]) x AD46 + IF(B20<35,([col Z] + [col AB]) x AD49 x AD46, IF(B20>50,0,([col Z] + [col AB]) x AD49 x AD46)))
AI	÷ ([col W] + [col X]) - ([col AE] + [col AF])

Assumptions:	Value	Unit	CELL REF	Description
Occupied Area	40,148	SF	**AD43**	
Existing Heating Plant Efficiency	76.0%		**AD44**	
Existing Chiller Efficiency	2.3	COP	**AD45**	
Fan Power	9.9	kW	**AD46**	
Heating Pump Power	1.6	kW	**AD47**	
Cooling Pump Power	0.0	kW	**AD48**	
UnOcc. Fan & Pump Cycling	10.0%		**AD49**	% Operating Hours During UnOcc.
UnOcc. Kitchen Vent. Reduction	0.0%		**AD50**	% CFM Saved
UnOcc. Ventilation Reduction	0.0%		**AD51**	% CFM Saved

Average Existing Space Temperatures					
	Cooling		Heating		Description
Occupied	74.0	**AC55**	74.0	**AE55**	
UnOccupied	80.0	**AC56**	73.0	**AE56**	

Average Proposed Space Temperatures					
	Cooling		Heating		Description
Occupied	74.0	**AC60**	72.0	**AE60**	
UnOccupied	85.0	**AC61**	55.0	**AE61**	

Page content is subject to Confidentiality Restrictions

Project Template
Theunis Dey-Elementary School
Integrated and New Energy Management Systems

TMY-2 Weather Data for Newark, NJ								Existing Occupancy Schedule				Existing Heating/Cooling Schedule				Existing Motor Operating Schedule				Existing				Proposed								Savings		
Amb. Temp Bin deg. F	Ave Temp deg. F	M.C.W.B deg. F	M.C. Enthalpy Btu/lbma	01-08 Hours	09-16 Hours	17-24 Hours	Total Bin Hours	Occ On-Peak Hrs.	UnOcc On-Peak Hrs.	Occ Off-Peak Hrs.	UnOcc Off-Peak Hrs.	Occ On-Peak Hrs.	UnOcc On-Peak Hrs.	Occ Off-Peak Hrs.	UnOcc Off-Peak Hrs.	Occ On-Peak Hrs.	UnOcc On-Peak Hrs.	Occ Off-Peak Hrs.	UnOcc Off-Peak Hrs.	Occ. Cool/ Heat Load (MBH)	UnOcc. Cool/ Heat Load (MBH)	Occ Cooling/Heating Energy Consump. (MMBTU)	UnOcc Cooling/Heating Energy Consump. (MMBTU)	Occ On-Peak Hrs.	UnOcc On-Peak Hrs.	Occ Off-Peak Hrs.	UnOcc Off-Peak Hrs.	Occ. Cool/ Heat Load (MBH)	UnOcc. Cool/ Heat Load (MBH)	Occ Cooling/Heating Energy Consump. (MMBTU)	UnOcc Cooling/Heating Energy Consump. (MMBTU)	Cooling Energy Savings (MMBTU)	HVAC Electrical Savings (kWh)	Heating Energy Savings (MMBTU)
A	B	C	D	E	F	G	H	I	J	K	L	M	N	O	P	Q	R	S	T	U	V	W	X	Y	Z	AA	AB	AC	AD	AE	AF	AG	AH	AI
Cooling																																		
105 to 110	107.5	0.0	0.0	0	0	0	0	0	0	0	0	0	0	0	0	0	0	0	0	541	315	0	0	0	0	0	0	541	315	0	0	0	0	
100 to 105	102.5	0.0	0.0	0	0	0	0	0	0	0	0	0	0	0	0	0	0	0	0	487	283	0	0	0	0	0	0	487	283	0	0	0	0	
95 to 100	97.5	72.2	35.7	0	5	1	6	1	1	0	4	1	1	0	4	1	1	0	4	433	252	0	0	1	1	0	4	433	252	0	0	0	6	
90 to 95	92.5	73.8	37.3	0	33	7	40	8	8	0	24	10	6	0	24	10	6	0	24	379	220	1	2	8	8	0	24	379	220	1	2	0	40	
85 to 90	87.5	71.3	35.1	0	92	30	122	25	25	0	73	30	19	0	73	30	19	0	73	325	189	3	5	25	25	0	73	325	189	2	5	0	121	
80 to 85	82.5	69.2	33.2	8	330	162	500	100	102	0	298	123	80	0	298	123	80	0	298	271	157	9	17	100	102	0	298	271	157	8	18	1	549	
75 to 80	77.5	67.4	31.8	98	257	265	620	125	126	0	369	152	99	0	369	152	99	0	369	217	126	9	17	125	126	0	369	217	126	8	18	1	680	
70 to 75	72.5	64.6	29.7	325	236	286	847	170	173	0	504	208	135	0	504	208	135	0	504	162	94	10	17	170	173	0	504	162	94	8	18	1	930	
65 to 70	67.5	60.9	27.0	251	204	216	671	135	137	0	399	165	107	0	399	165	107	0	399	108	63	5	9	135	137	0	399	108	63	4	10	0	736	
60 to 65	62.5	56.3	24.0	358	268	301	927	186	189	0	552	228	148	0	552	228	148	0	552	54	31	4	6	186	189	0	552	54	31	3	7	0	1,017	
Heating																																		
55 to 60	57.5	50.3	20.4	217	191	192	600	121	122	0	357	147	96	0	357	147	96	0	357	(274)	(48)	0	17	121	122	0	357	(274)	0	0	0		789	17
50 to 55	52.5	46.4	18.3	218	223	289	730	147	149	0	435	179	116	0	435	179	116	0	435	(383)	(143)	11	93	147	149	0	435	(383)	(48)	11	11		960	81
45 to 50	47.5	41.8	16.0	243	196	195	634	127	129	0	377	156	101	0	377	156	101	0	377	(492)	(239)	27	143	127	129	0	377	(492)	(143)	27	72		750	71
40 to 45	42.5	38.0	14.3	193	171	149	513	103	105	0	305	126	82	0	305	126	82	0	305	(602)	(334)	37	166	103	105	0	305	(602)	(239)	37	108		607	58
35 to 40	37.5	33.9	12.5	357	311	355	1,023	206	209	0	609	251	163	0	609	251	163	0	609	(711)	(429)	102	433	206	209	0	609	(711)	(334)	102	316		1,210	117
30 to 35	32.5	29.3	10.6	277	221	236	734	147	150	0	437	180	117	0	437	180	117	0	437	(821)	(525)	94	383	147	150	0	437	(821)	(429)	94	299		725	84
25 to 30	27.5	24.3	8.7	159	98	134	391	79	80	0	233	96	62	0	233	96	62	0	233	(930)	(620)	61	242	79	80	0	233	(930)	(525)	61	197		386	45
20 to 25	22.5	19.3	6.8	89	48	58	195	39	40	0	116	48	31	0	116	48	31	0	116	(1,039)	(716)	36	140	39	40	0	116	(1,039)	(620)	36	117		193	23
15 to 20	17.5	14.8	5.3	74	20	31	125	25	25	0	74	31	20	0	74	31	20	0	74	(1,149)	(811)	27	102	25	25	0	74	(1,149)	(716)	27	88		123	15
10 to 15	12.5	10.0	3.8	35	7	5	47	9	10	0	28	12	7	0	28	12	7	0	28	(1,258)	(907)	11	43	9	10	0	28	(1,258)	(811)	11	37		46	6
5 to 10	7.5	5.1	2.3	17	9	8	34	7	7	0	20	8	5	0	20	8	5	0	20	(1,368)	(1,002)	9	34	7	7	0	20	(1,368)	(907)	9	30		34	4
0 to 5	2.5	0.6	1.0	1	0	0	1	0	0	0	1	0	0	0	1	0	0	0	1	(1,477)	(1,098)	0	1	0	0	0	1	(1,477)	(1,002)	0	1		1	0
-5 to 0	(2.5)	0.0	0.0	0	0	0	0	0	0	0	0	0	0	0	0	0	0	0	0	(1,586)	(1,193)	0	0	0	0	0	0	(1,586)	(1,098)	0	0		0	0
-10 to -5	(7.5)	0.0	0.0	0	0	0	0	0	0	0	0	0	0	0	0	0	0	0	0	(1,696)	(1,288)	0	0	0	0	0	0	(1,696)	(1,193)	0	0		0	0
-15 to -10	(12.5)	0.0	0.0	0	0	0	0	0	0	0	0	0	0	0	0	0	0	0	0	(1,805)	(1,384)	0	0	0	0	0	0	(1,805)	(1,288)	0	0		0	0
-20 to -15	(17.5)	0.0	0.0	0	0	0	0	0	0	0	0	0	0	0	0	0	0	0	0	(1,915)	(1,479)	0	0	0	0	0	0	(1,915)	(1,384)	0	0		0	0
-25 to -20	(22.5)	0.0	0.0	0	0	0	0	0	0	0	0	0	0	0	0	0	0	0	0	(2,024)	(1,575)	0	0	0	0	0	0	(2,024)	(1,479)	0	0		0	0
				2,920	2,920	2,920	8,760	1,760	1,786	0	5,214	2,151	1,395	0	5,214	2,151	1,395	0	5,214			456	1,871	1,760	1,786	0	5,214			449	1,355	3	9,902	521

Cell Ref.	Comment
A-H	TMY-2 Weather Data for Newark, NJ
I - L	Existing Occupancy hours
M - P	Existing Heating/Cooling hours
Q - T	Existing Motor Operating Hours
U	Occupied Cooling and Heating loads (MBH)
V	Unoccupied Cooling and Heating loads (MBH)
W	Cooling = [col U] x ([col M] + [col O]) ÷ 1,000 ÷ AD45
	Heating = -MIN([col I] + [col K] , [col M] + [col O]) x MIN([col U] + internal gains , 0) + IF([col I] + [col K] > [col M]+[col O] , (([col I] + [col K]) - ([col M] + [col O])) x MIN([col V] + internal gains , 0) , 0) ÷ 1,000 ÷ AD44
X	Cooling = [col R] x ([col J] + [col L]) ÷ 1,000 ÷ AD45
	Heating = -([col N] + [col P]) x MIN([col V] + internal gains , 0) + IF([col I] + [col K] < [col M] + [col O] , (([col M] + [col O]) - ([col I] + [col K])) x MIN([col U] + internal gains , 0)) ÷ 1,000 ÷ AD44
Y ÷ AB	Proposed Operating hours
AC	Proposed Occupied Cooling and Heating Loads:
	Cooling = ([col B] - AC60) ÷ ([col B] - AC55) x [col U]
	Heating = ([col B] - AE60) ÷ ([col B] - AE55) x [col U]
AD	Proposed Unoccupied Cooling and Heating Loads:
	Cooling = ([col B] - AC61) ÷ ([col B] - AC56) x [col V]
	Heating = ([col B] - AE61) ÷ ([col B] - AE56) x [col V] ([col V] is modified to account for reduced kitchen and building ventilation due to EMS)
AE	Cooling = [col AC] x ([col Y] + [col AA]) ÷ 1,000 ÷ AD45
	Heating = -MIN([col I] + [col K] , [col Y] + [col AA]) x MIN([col AC] + internal gains , 0) + IF([col I] + [col K] > [col Y]+[col AA] , (([col I] + [col K]) - ([col Y] + [col AA])) x MIN([col AD] + internal gains , 0) , 0) ÷ 1,000 ÷ AD44
AF	Cooling = [col AD] x ([col Z] + [col AB]) ÷ 1,000 ÷ AD45
	Heating = -([col Z] + [col AB]) x MIN([col AD] + internal gains , 0) + IF([col I] + [col K] < [col Y] + [col AA] , (([col Y] + [col AA]) - ([col I] + [col K])) x MIN([col AC] + internal gains , 0)) ÷ 1,000 ÷ AD44
AG	÷ ([col W] + [col X]) - ([col AE] + [col AF])
	HVAC Fan and Pump Savings
AH	Cooling =([col Q] + [col S] + ([col R] + [col T]) x AD49) x (AD46 + AD48) - (([col Y] + [col AA] + ([col Z] + [col AB]) x AD49) x (AD46 + AD48)
	Heating =([col Q] + [col S]) x AD46 + IF(B20<35,([col R] + [col T]) x AD49 x AD46, IF(B20>50,0,([col R] + [col T]) x AD49 x AD46)) - (([col Y] + [col AA]) x AD46 + IF(B20<35,([col Z] + [col AB]) x AD49 x AD46, IF(B20>50,0,([col Z] + [col AB]) x AD49 x AD46)))
AI	÷ ([col W] + [col X]) - ([col AE] + [col AF])

Assumptions:	Value	Unit	CELL REF	Description
Occupied Area	46,579	SF	**AD43**	
Existing Heating Plant Efficiency	78.0%		**AD44**	
Existing Chiller Efficiency	3.5	COP	**AD45**	
Fan Power	24.6	kW	**AD46**	
Heating Pump Power	4.9	kW	**AD47**	
Cooling Pump Power	0.0	kW	**AD48**	
UnOcc. Fan & Pump Cycling	10.0%		**AD49**	% Operating Hours During UnOcc.
UnOcc. Kitchen Vent. Reduction	0.0%		**AD50**	% CFM Saved
UnOcc. Ventilation Reduction	0.0%		**AD51**	% CFM Saved

Average Existing Space Temperatures					
	Cooling		Heating		Description
Occupied	76.0	**AC55**	70.0	**AE55**	
UnOccupied	85.0	**AC56**	60.0	**AE56**	

Average Proposed Space Temperatures					
	Cooling		Heating		Description
Occupied	76.0	**AC60**	70.0	**AE60**	
UnOccupied	85.0	**AC61**	55.0	**AE61**	

Page content is subject to Confidentiality Restrictions

Project Template
James Fallon-Elementary School
Integrated and New Energy Management Systems

TMY-2 Weather Data for Newark, NJ								Existing Occupancy Schedule				Existing Heating/Cooling Schedule				Existing Motor Operating Schedule				Existing				Proposed							Savings		
Amb. Temp Bin deg. F	Ave Temp deg. F	M.C.W.B deg. F	M.C. Enthalpy Btu/lbma	01-08 Hours	09-16 Hours	17-24 Hours	Total Bin Hours	Occ On-Peak Hrs.	UnOcc On-Peak Hrs.	Occ Off-Peak Hrs.	UnOcc Off-Peak Hrs.	Occ On-Peak Hrs.	UnOcc On-Peak Hrs.	Occ Off-Peak Hrs.	UnOcc Off-Peak Hrs.	Occ On-Peak Hrs.	UnOcc On-Peak Hrs.	Occ Off-Peak Hrs.	UnOcc Off-Peak Hrs.	Occ. Cool/ Heat Load (MBH)	UnOcc. Cool/ Heat Load (MBH)	Occ Cooling/Heating Energy Consump. (MMBTU)	UnOcc Cooling/Heating Energy Consump. (MMBTU)	Occ On-Peak Hrs.	UnOcc On-Peak Hrs.	Occ Off-Peak Hrs.	UnOcc Off-Peak Hrs.	Occ. Cool/ Heat Load (MBH)	UnOcc. Cool/ Heat Load (MBH)	Occ Cooling/Heating Energy Consump. (MMBTU)	UnOcc Cooling/Heating Energy Consump. (MMBTU)	Cooling Energy Savings (MMBTU)	HVAC Electrical Savings (kWh)	Heating Energy Savings (MMBTU)
A	**B**	**C**	**D**	**E**	**F**	**G**	**H**	**I**	**J**	**K**	**L**	**M**	**N**	**O**	**P**	**Q**	**R**	**S**	**T**	**U**	**V**	**W**	**X**	**Y**	**Z**	**AA**	**AB**	**AC**	**AD**	**AE**	**AF**	**AG**	**AH**	**AI**
Cooling																																		
105 to 110	107.5	0.0	0.0	0	0	0	0	0	0	0	0	0	0	0	0	0	0	0	0	1,306	972	0	0	0	0	0	0	1,306	695	0	0	0	0	
100 to 105	102.5	0.0	0.0	0	0	0	0	0	0	0	0	0	0	0	0	0	0	0	0	1,175	875	0	0	0	0	0	0	1,175	625	0	0	0	0	
95 to 100	97.5	72.2	35.7	0	5	1	6	1	1	0	4	2	1	0	4	2	1	0	4	1,045	778	1	1	1	1	0	4	1,045	556	0	1	0	9	
90 to 95	92.5	73.8	37.3	0	33	7	40	8	8	0	24	11	5	0	24	11	5	0	24	914	681	4	8	8	8	0	24	914	486	3	6	3	62	
85 to 90	87.5	71.3	35.1	0	92	30	122	25	25	0	73	33	17	0	73	33	17	0	73	783	583	10	20	25	25	0	73	783	417	7	15	7	189	
80 to 85	82.5	69.2	33.2	8	330	162	500	100	102	0	298	134	68	0	298	134	68	0	298	653	486	33	67	100	102	0	298	653	347	25	53	23	1,800	
75 to 80	77.5	67.4	31.8	98	257	265	620	125	126	0	369	166	85	0	369	166	85	0	369	522	389	33	67	125	126	0	369	522	278	25	52	23	1,066	
70 to 75	72.5	64.6	29.7	325	236	286	847	170	173	0	504	227	116	0	504	227	116	0	504	392	292	34	69	170	173	0	504	392	208	25	53	24	1,456	
65 to 70	67.5	60.9	27.0	251	204	216	671	135	137	0	399	180	92	0	399	180	92	0	399	261	194	18	36	135	137	0	399	261	139	13	28	12	1,154	
60 to 65	62.5	56.3	24.0	358	268	301	927	186	189	0	552	248	127	0	552	248	127	0	552	131	97	12	25	186	189	0	552	131	69	9	20	9	1,594	
Heating																																		
55 to 60	57.5	50.3	20.4	217	191	192	600	121	122	0	357	161	82	0	357	161	82	0	357	(380)	(89)	0	41	121	122	0	357	(334)	0	0	0		1,210	41
50 to 55	52.5	46.4	18.3	218	223	289	730	147	149	0	435	196	100	0	435	196	100	0	435	(495)	(189)	15	119	147	149	0	435	(449)	(50)	7	6		1,472	121
45 to 50	47.5	41.8	16.0	243	196	195	634	127	129	0	377	170	87	0	377	170	87	0	377	(610)	(288)	30	164	127	129	0	377	(564)	(149)	23	65		1,150	106
40 to 45	42.5	38.0	14.3	193	171	149	513	103	105	0	305	137	70	0	305	137	70	0	305	(725)	(388)	38	181	103	105	0	305	(679)	(249)	33	100		931	86
35 to 40	37.5	33.9	12.5	357	311	355	1,023	206	209	0	609	274	140	0	609	274	140	0	609	(840)	(487)	104	458	206	209	0	609	(794)	(348)	93	296		1,856	173
30 to 35	32.5	29.3	10.6	277	221	236	734	147	150	0	437	197	101	0	437	197	101	0	437	(955)	(587)	95	398	147	150	0	437	(909)	(447)	87	281		1,136	125
25 to 30	27.5	24.3	8.7	159	98	134	391	79	80	0	233	105	54	0	233	105	54	0	233	(1,070)	(686)	61	249	79	80	0	233	(1,024)	(547)	57	186		605	67
20 to 25	22.5	19.3	6.8	89	48	58	195	39	40	0	116	52	27	0	116	52	27	0	116	(1,185)	(786)	36	143	39	40	0	116	(1,139)	(646)	34	111		302	34
15 to 20	17.5	14.8	5.3	74	20	31	125	25	25	0	74	33	17	0	74	33	17	0	74	(1,300)	(885)	26	103	25	25	0	74	(1,254)	(746)	25	83		193	22
10 to 15	12.5	10.0	3.8	35	7	5	47	9	10	0	28	13	6	0	28	13	6	0	28	(1,415)	(984)	11	43	9	10	0	28	(1,369)	(845)	11	36		73	8
5 to 10	7.5	5.1	2.3	17	9	8	34	7	7	0	20	9	5	0	20	9	5	0	20	(1,530)	(1,084)	9	35	7	7	0	20	(1,484)	(945)	9	29		53	6
0 to 5	2.5	0.6	1.0	1	0	0	1	0	0	0	1	0	0	0	1	0	0	0	1	(1,645)	(1,183)	0	1	0	0	0	1	(1,599)	(1,044)	0	1		2	0
-5 to 0	(2.5)	0.0	0.0	0	0	0	0	0	0	0	0	0	0	0	0	0	0	0	0	(1,760)	(1,283)	0	0	0	0	0	0	(1,714)	(1,144)	0	0		0	0
-10 to -5	(7.5)	0.0	0.0	0	0	0	0	0	0	0	0	0	0	0	0	0	0	0	0	(1,875)	(1,382)	0	0	0	0	0	0	(1,829)	(1,243)	0	0		0	0
-15 to -10	(12.5)	0.0	0.0	0	0	0	0	0	0	0	0	0	0	0	0	0	0	0	0	(1,990)	(1,482)	0	0	0	0	0	0	(1,944)	(1,342)	0	0		0	0
-20 to -15	(17.5)	0.0	0.0	0	0	0	0	0	0	0	0	0	0	0	0	0	0	0	0	(2,105)	(1,581)	0	0	0	0	0	0	(2,059)	(1,442)	0	0		0	0
-25 to -20	(22.5)	0.0	0.0	0	0	0	0	0	0	0	0	0	0	0	0	0	0	0	0	(2,220)	(1,681)	0	0	0	0	0	0	(2,174)	(1,541)	0	0		0	0
				2,920	2,920	2,920	8,760	1,760	1,786	0	5,214	2,346	1,200	0	5,214	2,346	1,200	0	5,214			571	2,228	1,760	1,786	0	5,214			487	1,421	101	16,311	791

Cell Ref.	Comment
A-H	TMY-2 Weather Data for Newark, NJ
I - L	Existing Occupancy hours
M - P	Existing Heating/Cooling hours
Q - T	Existing Motor Operating Hours
U	Occupied Cooling and Heating loads (MBH)
V	Unoccupied Cooling and Heating loads (MBH)
W	Cooling = [col U] x ([col M] + [col O]) ÷ 1,000 ÷ AD45
	Heating = -MIN([col I] + [col K] , [col M] + [col O]) x MIN([col U] + internal gains , 0) + IF([col I] + [col K] > [col M]+[col O] , (([col I] + [col K]) - ([col M] + [col O])) x MIN([col V] + internal gains , 0) , 0) ÷ 1,000 ÷ AD44
X	Cooling = [col R] x ([col J] + [col L]) ÷ 1,000 ÷ AD45
	Heating = -([col N] + [col P]) x MIN([col V] + internal gains , 0) + IF([col I] + [col K] < [col M] + [col O] , (([col M] + [col O]) - ([col I] + [col K])) x MIN([col U] + internal gains , 0)) ÷ 1,000 ÷ AD44
Y ÷ AB	Proposed Operating hours
AC	Proposed Occupied Cooling and Heating Loads:
	Cooling = ([col B] - AC60) ÷ ([col B] - AC55) x [col U]
	Heating = ([col B] - AE60) ÷ ([col B] - AE55) x [col U]
AD	Proposed Unoccupied Cooling and Heating Loads:
	Cooling = ([col B] - AC61) ÷ ([col B] - AC56) x [col V]
	Heating = ([col B] - AE61) ÷ ([col B] - AE56) x [col V] ([col V] is modified to account for reduced kitchen and building ventilation due to EMS)
AE	Cooling = [col AC] x ([col Y] + [col AA]) ÷ 1,000 ÷ AD45
	Heating = -MIN([col I] + [col K] , [col Y] + [col AA]) x MIN([col AC] + internal gains , 0) + IF([col I] + [col K] > [col Y]+[col AA] , (([col I] + [col K]) - ([col Y] + [col AA])) x MIN([col AD] + internal gains , 0) , 0) ÷ 1,000 ÷ AD44
AF	Cooling = [col AD] x ([col Z] + [col AB]) ÷ 1,000 ÷ AD45
	Heating = -([col Z] + [col AB]) x MIN([col AD] + internal gains , 0) + IF([col I] + [col K] < [col Y] + [col AA] , (([col Y] + [col AA]) - ([col I] + [col K])) x MIN([col AC] + internal gains , 0)) ÷ 1,000 ÷ AD44
AG	÷ ([col W] + [col X]) - ([col AE] + [col AF])
	HVAC Fan and Pump Savings
AH	Cooling =([col Q] + [col S] + ([col R] + [col T]) x AD49) x (AD46 + AD48) - ((col Y] + [col AA] + ([col Z] + [col AB]) x AD49) x (AD46 + AD48)
	Heating =([col Q] + [col S]) x AD46 + IF(B20<35,([col R] + [col T]) x AD49 x AD46, IF(B20>50,0,([col R] + [col T]) x AD49 x AD46)) - (([col Y] + [col AA]) x AD46 + IF(B20<35,([col Z] + [col AB]) x AD49 x AD46, IF(B20>50,0,([col Z] + [col AB]) x AD49 x AD46)))
AI	÷ ([col W] + [col X]) - ([col AE] + [col AF])

Assumptions:	Value	Unit	CELL REF	Description
Occupied Area	46,428	SF	**AD43**	
Existing Heating Plant Efficiency	85.0%		**AD44**	
Existing Chiller Efficiency	2.6	COP	**AD45**	
Fan Power	25.7	kW	**AD46**	
Heating Pump Power	4.4	kW	**AD47**	
Cooling Pump Power	0.0	kW	**AD48**	
UnOcc. Fan & Pump Cycling	10.0%		**AD49**	% Operating Hours During UnOcc.
UnOcc. Kitchen Vent. Reduction	0.0%		**AD50**	% CFM Saved
UnOcc. Ventilation Reduction	0.0%		**AD51**	% CFM Saved

Average Existing Space Temperatures					
	Cooling		Heating		Description
Occupied	74.0	**AC55**	74.0	**AE55**	
UnOccupied	80.0	**AC56**	62.0	**AE56**	

Average Proposed Space Temperatures					
	Cooling		Heating		Description
Occupied	74.0	**AC60**	72.0	**AE60**	
UnOccupied	85.0	**AC61**	55.0	**AE61**	

Page content is subject to Confidentiality Restrictions

Project Template
John F. Kennedy-Elementary School
Integrated and New Energy Management Systems

TMY-2 Weather Data for Newark, NJ								Existing Occupancy Schedule				Existing Heating/Cooling Schedule				Existing Motor Operating Schedule				Existing				Proposed								Savings		
Amb. Temp Bin deg. F	Ave Temp deg. F	M.C.W.B deg. F	M.C. Enthalpy Btu/lbma	01-08 Hours	09-16 Hours	17-24 Hours	Total Bin Hours	Occ On-Peak Hrs.	UnOcc On-Peak Hrs.	Occ Off-Peak Hrs.	UnOcc Off-Peak Hrs.	Occ On-Peak Hrs.	UnOcc On-Peak Hrs.	Occ Off-Peak Hrs.	UnOcc Off-Peak Hrs.	Occ On-Peak Hrs.	UnOcc On-Peak Hrs.	Occ Off-Peak Hrs.	UnOcc Off-Peak Hrs.	Occ. Cool/ Heat Load (MBH)	UnOcc. Cool/ Heat Load (MBH)	Occ Cooling/Heating Energy Consump. (MMBTU)	UnOcc Cooling/Heating Energy Consump. (MMBTU)	Occ On-Peak Hrs.	UnOcc On-Peak Hrs.	Occ Off-Peak Hrs.	UnOcc Off-Peak Hrs.	Occ. Cool/ Heat Load (MBH)	UnOcc. Cool/ Heat Load (MBH)	Occ Cooling/Heating Energy Consump. (MMBTU)	UnOcc Cooling/Heating Energy Consump. (MMBTU)	Cooling Energy Savings (MMBTU)	HVAC Electrical Savings (kWh)	Heating Energy Savings (MMBTU)
A	B	C	D	E	F	G	H	I	J	K	L	M	N	O	P	Q	R	S	T	U	V	W	X	Y	Z	AA	AB	AC	AD	AE	AF	AG	AH	AI
Cooling																																		
105 to 110	107.5	0.0	0.0	0	0	0	0	0	0	0	0	0	0	0	0	0	0	0	0	548	408	0	0	0	0	0	0	548	292	0	0	0	0	
100 to 105	102.5	0.0	0.0	0	0	0	0	0	0	0	0	0	0	0	0	0	0	0	0	493	367	0	0	0	0	0	0	493	262	0	0	0	0	
95 to 100	97.5	72.2	35.7	0	5	1	6	1	1	0	4	2	1	0	4	2	1	0	4	439	327	0	0	1	1	0	4	439	233	0	0	0	7	
90 to 95	92.5	73.8	37.3	0	33	7	40	8	8	0	24	11	5	0	24	11	5	0	24	384	286	1	3	8	8	0	24	384	204	1	2	1	47	
85 to 90	87.5	71.3	35.1	0	92	30	122	25	25	0	73	33	17	0	73	33	17	0	73	329	245	3	7	25	25	0	73	329	175	3	6	2	143	
80 to 85	82.5	69.2	33.2	8	330	162	500	100	102	0	298	134	68	0	298	134	68	0	298	274	204	12	24	100	102	0	298	274	146	9	19	8	1,360	
75 to 80	77.5	67.4	31.8	98	257	265	620	125	126	0	369	166	85	0	369	166	85	0	369	219	163	12	24	125	126	0	369	219	117	9	19	8	806	
70 to 75	72.5	64.6	29.7	325	236	286	847	170	173	0	504	227	116	0	504	227	116	0	504	164	122	12	25	170	173	0	504	164	87	9	19	8	1,100	
65 to 70	67.5	60.9	27.0	251	204	216	671	135	137	0	399	180	92	0	399	180	92	0	399	110	82	6	13	135	137	0	399	110	58	5	10	4	872	
60 to 65	62.5	56.3	24.0	358	268	301	927	186	189	0	552	248	127	0	552	248	127	0	552	55	41	4	9	186	189	0	552	55	29	3	7	3	1,204	
Heating																																		
55 to 60	57.5	50.3	20.4	217	191	192	600	121	122	0	357	161	82	0	357	161	82	0	357	(346)	(48)	0	20	121	122	0	357	(346)	0	0	0		981	20
50 to 55	52.5	46.4	18.3	218	223	289	730	147	149	0	435	196	100	0	435	196	100	0	435	(458)	(143)	8	98	147	149	0	435	(458)	(48)	8	5		1,193	94
45 to 50	47.5	41.8	16.0	243	196	195	634	127	129	0	377	170	87	0	377	170	87	0	377	(569)	(239)	26	150	127	129	0	377	(569)	(143)	26	68		933	82
40 to 45	42.5	38.0	14.3	193	171	149	513	103	105	0	305	137	70	0	305	137	70	0	305	(681)	(335)	36	174	103	105	0	305	(681)	(239)	36	106		755	67
35 to 40	37.5	33.9	12.5	357	311	355	1,023	206	209	0	609	274	140	0	609	274	140	0	609	(793)	(430)	102	451	206	209	0	609	(793)	(335)	102	315		1,505	136
30 to 35	32.5	29.3	10.6	277	221	236	734	147	150	0	437	197	101	0	437	197	101	0	437	(904)	(526)	95	398	147	150	0	437	(904)	(430)	95	300		858	98
25 to 30	27.5	24.3	8.7	159	98	134	391	79	80	0	233	105	54	0	233	105	54	0	233	(1,016)	(621)	62	252	79	80	0	233	(1,016)	(526)	62	199		457	53
20 to 25	22.5	19.3	6.8	89	48	58	195	39	40	0	116	52	27	0	116	52	27	0	116	(1,127)	(717)	37	146	39	40	0	116	(1,127)	(621)	37	119		228	27
15 to 20	17.5	14.8	5.3	74	20	31	125	25	25	0	74	33	17	0	74	33	17	0	74	(1,239)	(813)	27	106	25	25	0	74	(1,239)	(717)	27	89		146	17
10 to 15	12.5	10.0	3.8	35	7	5	47	9	10	0	28	13	6	0	28	13	6	0	28	(1,351)	(908)	12	45	9	10	0	28	(1,351)	(813)	12	38		55	7
5 to 10	7.5	5.1	2.3	17	9	8	34	7	7	0	20	9	5	0	20	9	5	0	20	(1,462)	(1,004)	9	36	7	7	0	20	(1,462)	(908)	9	31		40	5
0 to 5	2.5	0.6	1.0	1	0	0	1	0	0	0	1	0	0	0	1	0	0	0	1	(1,574)	(1,100)	0	1	0	0	0	1	(1,574)	(1,004)	0	1		1	0
-5 to 0	(2.5)	0.0	0.0	0	0	0	0	0	0	0	0	0	0	0	0	0	0	0	0	(1,686)	(1,195)	0	0	0	0	0	0	(1,686)	(1,100)	0	0		0	0
-10 to -5	(7.5)	0.0	0.0	0	0	0	0	0	0	0	0	0	0	0	0	0	0	0	0	(1,797)	(1,291)	0	0	0	0	0	0	(1,797)	(1,195)	0	0		0	0
-15 to -10	(12.5)	0.0	0.0	0	0	0	0	0	0	0	0	0	0	0	0	0	0	0	0	(1,909)	(1,386)	0	0	0	0	0	0	(1,909)	(1,291)	0	0		0	0
-20 to -15	(17.5)	0.0	0.0	0	0	0	0	0	0	0	0	0	0	0	0	0	0	0	0	(2,020)	(1,482)	0	0	0	0	0	0	(2,020)	(1,386)	0	0		0	0
-25 to -20	(22.5)	0.0	0.0	0	0	0	0	0	0	0	0	0	0	0	0	0	0	0	0	(2,132)	(1,578)	0	0	0	0	0	0	(2,132)	(1,482)	0	0		0	0
				2,920	2,920	2,920	8,760	1,760	1,786	0	5,214	2,346	1,200	0	5,214	2,346	1,200	0	5,214			465	1,981	1,760	1,786	0	5,214			452	1,353	36	12,690	605

Cell Ref.	Comment
A-H	TMY-2 Weather Data for Newark, NJ
I - L	Existing Occupancy hours
M - P	Existing Heating/Cooling hours
Q - T	Existing Motor Operating Hours
U	Occupied Cooling and Heating loads (MBH)
V	Unoccupied Cooling and Heating loads (MBH)
W	Cooling = [col U] x ([col M] + [col O]) ÷ 1,000 ÷ AD45
	Heating = -MIN([col I] + [col K] , [col M] + [col O]) x MIN([col U] + internal gains , 0) + IF([col I] + [col K] > [col M]+[col O] , (([col I] + [col K]) - ([col M] + [col O])) x MIN([col V] + internal gains , 0) , 0) ÷ 1,000 ÷ AD44
X	Cooling = [col R] x ([col J] + [col L]) ÷ 1,000 ÷ AD45
	Heating = -([col N] + [col P]) x MIN([col V] + internal gains , 0) + IF([col I] + [col K] < [col M] + [col O] , (([col M] + [col O]) - ([col I] + [col K])) x MIN([col U] + internal gains , 0)) ÷ 1,000 ÷ AD44
Y ÷ AB	Proposed Operating hours
AC	Proposed Occupied Cooling and Heating Loads:
	Cooling = ([col B] - AC60) ÷ ([col B] - AC55) x [col U]
	Heating = ([col B] - AE60) ÷ ([col B] - AE55) x [col U]
AD	Proposed Unoccupied Cooling and Heating Loads:
	Cooling = ([col B] - AC61) ÷ ([col B] - AC56) x [col V]
	Heating = ([col B] - AE61) ÷ ([col B] - AE56) x [col V] ([col V] is modified to account for reduced kitchen and building ventilation due to EMS)
AE	Cooling = [col AC] x ([col Y] + [col AA]) ÷ 1,000 ÷ AD45
	Heating = -MIN([col I] + [col K] , [col Y] + [col AA]) x MIN([col AC] + internal gains , 0) + IF([col I] + [col K] > [col Y]+[col AA] , (([col I] + [col K]) - ([col Y] + [col AA])) x MIN([col AD] + internal gains , 0) , 0) ÷ 1,000 ÷ AD44
AF	Cooling = [col AD] x ([col Z] + [col AB]) ÷ 1,000 ÷ AD45
	Heating = -([col Z] + [col AB]) x MIN([col AD] + internal gains , 0) + IF([col I] + [col K] < [col Y] + [col AA] , (([col Y] + [col AA]) - ([col I] + [col K])) x MIN([col AC] + internal gains , 0)) ÷ 1,000 ÷ AD44
AG	= ([col W] + [col X]) - ([col AE] + [col AF])
	HVAC Fan and Pump Savings
AH	Cooling =([col Q] + [col S] + ([col R] + [col T]) x AD49) x (AD46 + AD48) - (([col Y] + [col AA] + ([col Z] + [col AB]) x AD49) x (AD46 + AD48)
	Heating =([col Q] + [col S]) x AD46 + IF(B20<35,([col R] + [col T]) x AD49 x AD46, IF(B20>50,0,([col R] + [col T]) x AD49 x AD46)) - (([col Y] + [col AA]) x AD46 + IF(B20<35,([col Z] + [col AB]) x AD49 x AD46, IF(B20>50,0,([col Z] + [col AB]) x AD49 x AD46)))
AI	= ([col W] + [col X]) - ([col AE] + [col AF])

Assumptions:	Value	Unit	CELL REF	Description
Occupied Area	44,305	SF	**AD43**	
Existing Heating Plant Efficiency	76.0%		**AD44**	
Existing Chiller Efficiency	3.1	COP	**AD45**	
Fan Power	19.4	kW	**AD46**	
Heating Pump Power	5.0	kW	**AD47**	
Cooling Pump Power	0.0	kW	**AD48**	
UnOcc. Fan & Pump Cycling	10.0%		**AD49**	% Operating Hours During UnOcc.
UnOcc. Kitchen Vent. Reduction	0.0%		**AD50**	% CFM Saved
UnOcc. Ventilation Reduction	0.0%		**AD51**	% CFM Saved

Average Existing Space Temperatures					
	Cooling		Heating		Description
Occupied	74.0	**AC55**	73.0	**AE55**	
UnOccupied	80.0	**AC56**	60.0	**AE56**	

Average Proposed Space Temperatures					
	Cooling		Heating		Description
Occupied	74.0	**AC60**	73.0	**AE60**	
UnOccupied	85.0	**AC61**	55.0	**AE61**	

Page content is subject to Confidentiality Restrictions

Project Template
Lafayette-Elementary School
Integrated and New Energy Management Systems

TMY-2 Weather Data for Newark, NJ								Existing Occupancy Schedule				Existing Heating/Cooling Schedule				Existing Motor Operating Schedule				Existing				Proposed						Savings		
Amb. Temp Bin deg. F	Ave Temp deg. F	M.C.W.B deg. F	M.C. Enthalpy Btu/lbma	01-08 Hours	09-16 Hours	17-24 Hours	Total Bin Hours	Occ On-Peak Hrs.	UnOcc On-Peak Hrs.	Occ Off-Peak Hrs.	UnOcc Off-Peak Hrs.	Occ On-Peak Hrs.	UnOcc On-Peak Hrs.	Occ Off-Peak Hrs.	UnOcc Off-Peak Hrs.	Occ On-Peak Hrs.	UnOcc On-Peak Hrs.	Occ Off-Peak Hrs.	UnOcc Off-Peak Hrs.	Occ. Cool/ Heat Load (MBH)	UnOcc. Cool/ Heat Load (MBH)	Occ Cooling/Heating Energy Consump. (MMBTU)	UnOcc Cooling/Heating Energy Consump. (MMBTU)	Occ On-Peak Hrs.	UnOcc On-Peak Hrs.	Occ Off-Peak Hrs.	UnOcc Off-Peak Hrs.	Occ. Cool/ Heat Load (MBH)	UnOcc. Cool/ Heat Load (MBH)	Occ Cooling/Heating Energy Consump. (MMBTU)	UnOcc Cooling/Heating Energy Consump. (MMBTU)	Cooling Energy Savings (MMBTU)	HVAC Electrical Savings (kWh)	Heating Energy Savings (MMBTU)
A	B	C	D	E	F	G	H	I	J	K	L	M	N	O	P	Q	R	S	T	U	V	W	X	Y	Z	AA	AB	AC	AD	AE	AF	AG	AH	AI
Cooling																																		
105 to 110	107.5	0.0	0.0	0	0	0	0	0	0	0	0	0	0	0	0	0	0	0	0	1,081	805	0	0	0	0	0	0	1,081	575	0	0	0	0	
100 to 105	102.5	0.0	0.0	0	0	0	0	0	0	0	0	0	0	0	0	0	0	0	0	973	724	0	0	0	0	0	0	973	517	0	0	0	0	
95 to 100	97.5	72.2	35.7	0	5	1	6	1	1	0	4	2	1	0	4	2	1	0	4	865	644	1	1	1	1	0	4	865	460	0	1	0	3	
90 to 95	92.5	73.8	37.3	0	33	7	40	9	7	0	24	10	6	0	24	11	5	0	24	756	563	3	6	9	7	0	24	756	402	3	5	2	20	
85 to 90	87.5	71.3	35.1	0	92	30	122	27	22	0	73	31	18	0	73	33	17	0	73	648	483	8	17	27	22	0	73	648	345	7	12	5	61	
80 to 85	82.5	69.2	33.2	8	330	162	500	112	91	0	298	128	74	0	298	134	68	0	298	540	402	26	57	112	91	0	298	540	287	23	42	18	735	
75 to 80	77.5	67.4	31.8	98	257	265	620	138	113	0	369	159	92	0	369	166	85	0	369	432	322	26	56	138	113	0	369	432	230	23	42	18	345	
70 to 75	72.5	64.6	29.7	325	236	286	847	189	154	0	504	217	125	0	504	227	116	0	504	324	241	27	58	189	154	0	504	324	172	23	43	18	472	
65 to 70	67.5	60.9	27.0	251	204	216	671	150	122	0	399	172	99	0	399	180	92	0	399	216	161	14	30	150	122	0	399	216	115	12	23	10	374	
60 to 65	62.5	56.3	24.0	358	268	301	927	207	168	0	552	238	137	0	552	248	127	0	552	108	80	10	21	207	168	0	552	108	57	8	16	7	516	
Heating																																		
55 to 60	57.5	50.3	20.4	217	191	192	600	134	109	0	357	154	89	0	357	161	82	0	357	(412)	(201)	6	106	134	109	0	357	(412)	0	6	0		397	106
50 to 55	52.5	46.4	18.3	218	223	289	730	163	133	0	435	187	108	0	435	196	100	0	435	(554)	(335)	38	229	163	133	0	435	(554)	(67)	38	22		483	207
45 to 50	47.5	41.8	16.0	243	196	195	634	142	115	0	377	163	94	0	377	170	87	0	377	(696)	(469)	59	286	142	115	0	377	(696)	(201)	59	106		377	180
40 to 45	42.5	38.0	14.3	193	171	149	513	115	93	0	305	132	76	0	305	137	70	0	305	(839)	(602)	70	301	115	93	0	305	(839)	(335)	70	156		305	146
35 to 40	37.5	33.9	12.5	357	311	355	1,023	228	186	0	609	263	152	0	609	274	140	0	609	(981)	(736)	181	741	228	186	0	609	(981)	(469)	181	450		609	291
30 to 35	32.5	29.3	10.6	277	221	236	734	164	133	0	437	188	109	0	437	197	101	0	437	(1,123)	(870)	161	633	164	133	0	437	(1,123)	(602)	161	424		368	209
25 to 30	27.5	24.3	8.7	159	98	134	391	87	71	0	233	100	58	0	233	105	54	0	233	(1,265)	(1,004)	102	391	87	71	0	233	(1,265)	(736)	102	279		196	111
20 to 25	22.5	19.3	6.8	89	48	58	195	44	35	0	116	50	29	0	116	52	27	0	116	(1,407)	(1,138)	59	222	44	35	0	116	(1,407)	(870)	59	166		98	56
15 to 20	17.5	14.8	5.3	74	20	31	125	28	23	0	74	32	19	0	74	33	17	0	74	(1,549)	(1,272)	43	159	28	23	0	74	(1,549)	(1,004)	43	123		63	36
10 to 15	12.5	10.0	3.8	35	7	5	47	10	9	0	28	12	7	0	28	13	6	0	28	(1,691)	(1,406)	18	66	10	9	0	28	(1,691)	(1,138)	18	53		24	13
5 to 10	7.5	5.1	2.3	17	9	8	34	8	6	0	20	9	5	0	20	9	5	0	20	(1,834)	(1,540)	15	53	8	6	0	20	(1,834)	(1,272)	15	43		17	10
0 to 5	2.5	0.6	1.0	1	0	0	1	0	0	0	1	0	0	0	1	0	0	0	1	(1,976)	(1,673)	0	2	0	0	0	1	(1,976)	(1,406)	0	1		1	0
-5 to 0	(2.5)	0.0	0.0	0	0	0	0	0	0	0	0	0	0	0	0	0	0	0	0	(2,118)	(1,807)	0	0	0	0	0	0	(2,118)	(1,540)	0	0		0	0
-10 to -5	(7.5)	0.0	0.0	0	0	0	0	0	0	0	0	0	0	0	0	0	0	0	0	(2,260)	(1,941)	0	0	0	0	0	0	(2,260)	(1,673)	0	0		0	0
-15 to -10	(12.5)	0.0	0.0	0	0	0	0	0	0	0	0	0	0	0	0	0	0	0	0	(2,402)	(2,075)	0	0	0	0	0	0	(2,402)	(1,807)	0	0		0	0
-20 to -15	(17.5)	0.0	0.0	0	0	0	0	0	0	0	0	0	0	0	0	0	0	0	0	(2,544)	(2,209)	0	0	0	0	0	0	(2,544)	(1,941)	0	0		0	0
-25 to -20	(22.5)	0.0	0.0	0	0	0	0	0	0	0	0	0	0	0	0	0	0	0	0	(2,686)	(2,343)	0	0	0	0	0	0	(2,686)	(2,075)	0	0		0	0
				2,920	2,920	2,920	8,760	1,955	1,591	0	5,214	2,249	1,297	0	5,214	2,346	1,200	0	5,214			867	3,434	1,955	1,591	0	5,214			852	2,007	77	5,463	1,364

Cell Ref.	Comment
A-H	TMY-2 Weather Data for Newark, NJ
I - L	Existing Occupancy hours
M - P	Existing Heating/Cooling hours
Q - T	Existing Motor Operating Hours
U	Occupied Cooling and Heating loads (MBH)
V	Unoccupied Cooling and Heating loads (MBH)
W	Cooling = [col U] x ([col M] + [col O]) ÷ 1,000 ÷ AD45
	Heating = -MIN([col I] + [col K] , [col M] + [col O]) x MIN([col U] + internal gains , 0) + IF([col I] + [col K] > [col M]+[col O] , (([col I] + [col K]) - ([col M] + [col O])) x MIN([col V] + internal gains , 0) , 0) ÷ 1,000 ÷ AD44
X	Cooling = [col R] x ([col J] + [col L]) ÷ 1,000 ÷ AD45
	Heating = -([col N] + [col P]) x MIN([col V] + internal gains , 0) + IF([col I] + [col K] < [col M] + [col O] , (([col M] + [col O]) - ([col I] + [col K])) x MIN([col U] + internal gains , 0)) ÷ 1,000 ÷ AD44
Y ÷ AB	Proposed Operating hours
AC	Proposed Occupied Cooling and Heating Loads:
	Cooling = ([col B] - AC60) ÷ ([col B] - AC55) x [col U]
	Heating = ([col B] - AE60) ÷ ([col B] - AE55) x [col U]
AD	Proposed Unoccupied Cooling and Heating Loads:
	Cooling = ([col B] - AC61) ÷ ([col B] - AC56) x [col V]
	Heating = ([col B] - AE61) ÷ ([col B] - AE56) x [col V] ([col V] is modified to account for reduced kitchen and building ventilation due to EMS)
AE	Cooling = [col AC] x ([col Y] + [col AA]) ÷ 1,000 ÷ AD45
	Heating = -MIN([col I] + [col K] , [col Y] + [col AA]) x MIN([col AC] + internal gains , 0) + IF([col I] + [col K] > [col Y]+[col AA] , (([col I] + [col K]) - ([col Y] + [col AA])) x MIN([col AD] + internal gains , 0) , 0) ÷ 1,000 ÷ AD44
AF	Cooling = [col AD] x ([col Z] + [col AB]) ÷ 1,000 ÷ AD45
	Heating = -([col Z] + [col AB]) x MIN([col AD] + internal gains , 0) + IF([col I] + [col K] < [col Y] + [col AA] , (([col Y] + [col AA]) - ([col I] + [col K])) x MIN([col AC] + internal gains , 0)) ÷ 1,000 ÷ AD44
AG	÷ ([col W] + [col X]) - ([col AE] + [col AF])
	HVAC Fan and Pump Savings
AH	Cooling =([col Q] + [col S] + ([col R] + [col T]) x AD49) x (AD46 + AD48) - ((col Y] + [col AA] + ([col Z] + [col AB]) x AD49) x (AD46 + AD48)
	Heating =([col Q] + [col S]) x AD46 + IF(B20<35,([col R] + [col T]) x AD49 x AD46, IF(B20>50,0,([col R] + [col T]) x AD49 x AD46)) - (([col Y] + [col AA]) x AD46 + IF(B20<35,([col Z] + [col AB]) x AD49 x AD46, IF(B20>50,0,([col Z] + [col AB]) x AD49 x AD46)))
AI	÷ ([col W] + [col X]) - ([col AE] + [col AF])

Assumptions:	Value	Unit	CELL REF	Description
Occupied Area	46,480	SF	AD43	
Existing Heating Plant Efficiency	76.0%		AD44	
Existing Chiller Efficiency	2.6	COP	AD45	
Fan Power	12.5	kW	AD46	
Heating Pump Power	2.3	kW	AD47	
Cooling Pump Power	0.0	kW	AD48	
UnOcc. Fan & Pump Cycling	10.0%		AD49	% Operating Hours During UnOcc.
UnOcc. Kitchen Vent. Reduction	0.0%		AD50	% CFM Saved
UnOcc. Ventilation Reduction	0.0%		AD51	% CFM Saved

Average Existing Space Temperatures					
	Cooling		Heating		Description
Occupied	74.0	AC55	72.0	AE55	
UnOccupied	80.0	AC56	65.0	AE56	

Average Proposed Space Temperatures					
	Cooling		Heating		Description
Occupied	74.0	AC60	72.0	AE60	
UnOccupied	85.0	AC61	55.0	AE61	

Page content is subject to Confidentiality Restrictions

Project Template
Packanack-Elementary School
Integrated and New Energy Management Systems

TMY-2 Weather Data for Newark, NJ								Existing Occupancy Schedule				Existing Heating/Cooling Schedule				Existing Motor Operating Schedule				Existing				Proposed								Savings		
Amb. Temp Bin deg. F	Ave Temp deg. F	M.C.W.B deg. F	M.C. Enthalpy Btu/lbma	01-08 Hours	09-16 Hours	17-24 Hours	Total Bin Hours	Occ On-Peak Hrs.	UnOcc On-Peak Hrs.	Occ Off-Peak Hrs.	UnOcc Off-Peak Hrs.	Occ On-Peak Hrs.	UnOcc On-Peak Hrs.	Occ Off-Peak Hrs.	UnOcc Off-Peak Hrs.	Occ On-Peak Hrs.	UnOcc On-Peak Hrs.	Occ Off-Peak Hrs.	UnOcc Off-Peak Hrs.	Occ. Cool/ Heat Load (MBH)	UnOcc. Cool/ Heat Load (MBH)	Occ Cooling/Heating Energy Consump. (MMBTU)	UnOcc Cooling/Heating Energy Consump. (MMBTU)	Occ On-Peak Hrs.	UnOcc On-Peak Hrs.	Occ Off-Peak Hrs.	UnOcc Off-Peak Hrs.	Occ. Cool/ Heat Load (MBH)	UnOcc. Cool/ Heat Load (MBH)	Occ Cooling/Heating Energy Consump. (MMBTU)	UnOcc Cooling/Heating Energy Consump. (MMBTU)	Cooling Energy Savings (MMBTU)	HVAC Electrical Savings (kWh)	Heating Energy Savings (MMBTU)
A	B	C	D	E	F	G	H	I	J	K	L	M	N	O	P	Q	R	S	T	U	V	W	X	Y	Z	AA	AB	AC	AD	AE	AF	AG	AH	AI
Cooling																																		
105 to 110	107.5	0.0	0.0	0	0	0	0	0	0	0	0	0	0	0	0	0	0	0	0	97	72	0	0	0	0	0	0	97	52	0	0	0	0	
100 to 105	102.5	0.0	0.0	0	0	0	0	0	0	0	0	0	0	0	0	0	0	0	0	87	65	0	0	0	0	0	0	87	46	0	0	0	0	
95 to 100	97.5	72.2	35.7	0	5	1	6	1	1	0	4	2	1	0	4	2	1	0	4	78	58	0	0	1	1	0	4	78	41	0	0	0	4	
90 to 95	92.5	73.8	37.3	0	33	7	40	8	8	0	24	11	5	0	24	11	5	0	24	68	51	0	0	8	8	0	24	68	36	0	0	0	30	
85 to 90	87.5	71.3	35.1	0	92	30	122	25	25	0	73	33	17	0	73	33	17	0	73	58	43	1	1	25	25	0	73	58	31	0	1	0	91	
80 to 85	82.5	69.2	33.2	8	330	162	500	100	102	0	298	134	68	0	298	134	68	0	298	49	36	2	4	100	102	0	298	49	26	2	3	1	866	
75 to 80	77.5	67.4	31.8	98	257	265	620	125	126	0	369	166	85	0	369	166	85	0	369	39	29	2	4	125	126	0	369	39	21	2	3	1	513	
70 to 75	72.5	64.6	29.7	325	236	286	847	170	173	0	504	227	116	0	504	227	116	0	504	29	22	2	4	170	173	0	504	29	15	2	3	1	701	
65 to 70	67.5	60.9	27.0	251	204	216	671	135	137	0	399	180	92	0	399	180	92	0	399	19	14	1	2	135	137	0	399	19	10	1	2	1	555	
60 to 65	62.5	56.3	24.0	358	268	301	927	186	189	0	552	248	127	0	552	248	127	0	552	10	7	1	2	186	189	0	552	10	5	1	1	1	767	
Heating																																		
55 to 60	57.5	50.3	20.4	217	191	192	600	121	122	0	357	161	82	0	357	161	82	0	357	(437)	(310)	3	176	121	122	0	357	(437)	0	3	0		496	176
50 to 55	52.5	46.4	18.3	218	223	289	730	147	149	0	435	196	100	0	435	196	100	0	435	(587)	(434)	33	311	147	149	0	435	(587)	(62)	33	16		604	296
45 to 50	47.5	41.8	16.0	243	196	195	634	127	129	0	377	170	87	0	377	170	87	0	377	(738)	(559)	54	355	127	129	0	377	(738)	(186)	54	96		472	258
40 to 45	42.5	38.0	14.3	193	171	149	513	103	105	0	305	137	70	0	305	137	70	0	305	(888)	(683)	64	355	103	105	0	305	(888)	(310)	64	145		382	210
35 to 40	37.5	33.9	12.5	357	311	355	1,023	206	209	0	609	274	140	0	609	274	140	0	609	(1,039)	(807)	169	844	206	209	0	609	(1,039)	(434)	169	423		761	421
30 to 35	32.5	29.3	10.6	277	221	236	734	147	150	0	437	197	101	0	437	197	101	0	437	(1,189)	(931)	150	703	147	150	0	437	(1,189)	(559)	150	399		546	304
25 to 30	27.5	24.3	8.7	159	98	134	391	79	80	0	233	105	54	0	233	105	54	0	233	(1,340)	(1,055)	96	426	79	80	0	233	(1,340)	(683)	96	264		291	163
20 to 25	22.5	19.3	6.8	89	48	58	195	39	40	0	116	52	27	0	116	52	27	0	116	(1,491)	(1,179)	55	239	39	40	0	116	(1,491)	(807)	55	157		145	82
15 to 20	17.5	14.8	5.3	74	20	31	125	25	25	0	74	33	17	0	74	33	17	0	74	(1,641)	(1,303)	40	170	25	25	0	74	(1,641)	(931)	40	117		93	53
10 to 15	12.5	10.0	3.8	35	7	5	47	9	10	0	28	13	6	0	28	13	6	0	28	(1,792)	(1,427)	17	70	9	10	0	28	(1,792)	(1,055)	17	50		35	20
5 to 10	7.5	5.1	2.3	17	9	8	34	7	7	0	20	9	5	0	20	9	5	0	20	(1,942)	(1,551)	14	55	7	7	0	20	(1,942)	(1,179)	14	41		25	14
0 to 5	2.5	0.6	1.0	1	0	0	1	0	0	0	1	0	0	0	1	0	0	0	1	(2,093)	(1,676)	0	2	0	0	0	1	(2,093)	(1,303)	0	1		1	0
-5 to 0	(2.5)	0.0	0.0	0	0	0	0	0	0	0	0	0	0	0	0	0	0	0	0	(2,243)	(1,800)	0	0	0	0	0	0	(2,243)	(1,427)	0	0		0	0
-10 to -5	(7.5)	0.0	0.0	0	0	0	0	0	0	0	0	0	0	0	0	0	0	0	0	(2,394)	(1,924)	0	0	0	0	0	0	(2,394)	(1,551)	0	0		0	0
-15 to -10	(12.5)	0.0	0.0	0	0	0	0	0	0	0	0	0	0	0	0	0	0	0	0	(2,545)	(2,048)	0	0	0	0	0	0	(2,545)	(1,676)	0	0		0	0
-20 to -15	(17.5)	0.0	0.0	0	0	0	0	0	0	0	0	0	0	0	0	0	0	0	0	(2,695)	(2,172)	0	0	0	0	0	0	(2,695)	(1,800)	0	0		0	0
-25 to -20	(22.5)	0.0	0.0	0	0	0	0	0	0	0	0	0	0	0	0	0	0	0	0	(2,846)	(2,296)	0	0	0	0	0	0	(2,846)	(1,924)	0	0		0	0
				2,920	2,920	2,920	8,760	1,760	1,786	0	5,214	2,346	1,200	0	5,214	2,346	1,200	0	5,214			705	3,724	1,760	1,786	0	5,214			702	1,722	6	7,377	1,998

Cell Ref.	Comment
A-H	TMY-2 Weather Data for Newark, NJ
I - L	Existing Occupancy hours
M - P	Existing Heating/Cooling hours
Q - T	Existing Motor Operating Hours
U	Occupied Cooling and Heating loads (MBH)
V	Unoccupied Cooling and Heating loads (MBH)
W	Cooling = [col U] x ([col M] + [col O]) ÷ 1,000 ÷ AD45
	Heating = -MIN([col I] + [col K] , [col M] + [col O]) x MIN([col U] + internal gains , 0) + IF([col I] + [col K] > [col M]+[col O] , (([col I] + [col K]) - ([col M] + [col O])) x MIN([col V] + internal gains , 0) , 0) ÷ 1,000 ÷ AD44
X	Cooling = [col R] x ([col J] + [col L]) ÷ 1,000 ÷ AD45
	Heating = -([col N] + [col P]) x MIN([col V] + internal gains , 0) + IF([col I] + [col K] < [col M] + [col O] , (([col M] + [col O]) - ([col I] + [col K])) x MIN([col U] + internal gains , 0)) ÷ 1,000 ÷ AD44
Y ÷ AB	Proposed Operating hours
AC	Proposed Occupied Cooling and Heating Loads:
	Cooling = ([col B] - AC60) ÷ ([col B] - AC55) x [col U]
	Heating = ([col B] - AE60) ÷ ([col B] - AE55) x [col U]
AD	Proposed Unoccupied Cooling and Heating Loads:
	Cooling = ([col B] - AC61) ÷ ([col B] - AC56) x [col V]
	Heating = ([col B] - AE61) ÷ ([col B] - AE56) x [col V] ([col V] is modified to account for reduced kitchen and building ventilation due to EMS)
AE	Cooling = [col AC] x ([col Y] + [col AA]) ÷ 1,000 ÷ AD45
	Heating = -MIN([col I] + [col K] , [col Y] + [col AA]) x MIN([col AC] + internal gains , 0) + IF([col I] + [col K] > [col Y]+[col AA] , (([col I] + [col K]) - ([col Y] + [col AA])) x MIN([col AD] + internal gains , 0) , 0) ÷ 1,000 ÷ AD44
AF	Cooling = [col AD] x ([col Z] + [col AB]) ÷ 1,000 ÷ AD45
	Heating = -([col Z] + [col AB]) x MIN([col AD] + internal gains , 0) + IF([col I] + [col K] < [col Y] + [col AA] , (([col Y] + [col AA]) - ([col I] + [col K])) x MIN([col AC] + internal gains , 0)) ÷ 1,000 ÷ AD44
AG	÷ ([col W] + [col X]) - ([col AE] + [col AF])
	HVAC Fan and Pump Savings
AH	Cooling =([col Q] + [col S] + ([col R] + [col T]) x AD49) x (AD46 + AD48) - ((col Y] + [col AA] + ([col Z] + [col AB]) x AD49) x (AD46 + AD48)
	Heating =([col Q] + [col S]) x AD46 + IF(B20<35,([col R] + [col T]) x AD49 x AD46, IF(B20>50,0,([col R] + [col T]) x AD49 x AD46)) - (([col Y] + [col AA]) x AD46 + IF(B20<35,([col Z] + [col AB]) x AD49 x AD46, IF(B20>50,0,([col Z] + [col AB]) x AD49 x AD46)))
AI	÷ ([col W] + [col X]) - ([col AE] + [col AF])

Assumptions:	Value	Unit	CELL REF	Description
Occupied Area	51,762	SF	**AD43**	
Existing Heating Plant Efficiency	76.0%		**AD44**	
Existing Chiller Efficiency	3.2	COP	**AD45**	
Fan Power	12.4	kW	**AD46**	
Heating Pump Power	0.0	kW	**AD47**	
Cooling Pump Power	0.0	kW	**AD48**	
UnOcc. Fan & Pump Cycling	10.0%		**AD49**	% Operating Hours During UnOcc.
UnOcc. Kitchen Vent. Reduction	0.0%		**AD50**	% CFM Saved
UnOcc. Ventilation Reduction	0.0%		**AD51**	% CFM Saved

Average Existing Space Temperatures					
	Cooling		Heating		Description
Occupied	74.0	**AC55**	72.0	**AE55**	
UnOccupied	80.0	**AC56**	70.0	**AE56**	

Average Proposed Space Temperatures					
	Cooling		Heating		Description
Occupied	74.0	**AC60**	72.0	**AE60**	
UnOccupied	85.0	**AC61**	55.0	**AE61**	

Page content is subject to Confidentiality Restrictions

Project Template
Pines Lake-Elementary School
Integrated and New Energy Management Systems

TMY-2 Weather Data for Newark, NJ								Existing Occupancy Schedule				Existing Heating/Cooling Schedule				Existing Motor Operating Schedule				Existing				Proposed							Savings		
Amb. Temp Bin deg. F	Ave Temp deg. F	M.C.W.B deg. F	M.C. Enthalpy Btu/lbma	01-08 Hours	09-16 Hours	17-24 Hours	Total Bin Hours	Occ On-Peak Hrs.	UnOcc On-Peak Hrs.	Occ Off-Peak Hrs.	UnOcc Off-Peak Hrs.	Occ On-Peak Hrs.	UnOcc On-Peak Hrs.	Occ Off-Peak Hrs.	UnOcc Off-Peak Hrs.	Occ On-Peak Hrs.	UnOcc On-Peak Hrs.	Occ Off-Peak Hrs.	UnOcc Off-Peak Hrs.	Occ. Cool/ Heat Load (MBH)	UnOcc. Cool/ Heat Load (MBH)	Occ Cooling/Heating Energy Consump. (MMBTU)	UnOcc Cooling/Heating Energy Consump. (MMBTU)	Occ On-Peak Hrs.	UnOcc On-Peak Hrs.	Occ Off-Peak Hrs.	UnOcc Off-Peak Hrs.	Occ. Cool/ Heat Load (MBH)	UnOcc. Cool/ Heat Load (MBH)	Occ Cooling/Heating Energy Consump. (MMBTU)	UnOcc Cooling/Heating Energy Consump. (MMBTU)	Cooling Energy Savings (MMBTU)	HVAC Electrical Savings (kWh)	Heating Energy Savings (MMBTU)
A	B	C	D	E	F	G	H	I	J	K	L	M	N	O	P	Q	R	S	T	U	V	W	X	Y	Z	AA	AB	AC	AD	AE	AF	AG	AH	AI
Cooling																																		
105 to 110	107.5	0.0	0.0	0	0	0	0	0	0	0	0	0	0	0	0	0	0	0	0	1,084	808	0	0	0	0	0	0	1,084	577	0	0	0	0	
100 to 105	102.5	0.0	0.0	0	0	0	0	0	0	0	0	0	0	0	0	0	0	0	0	976	727	0	0	0	0	0	0	976	519	0	0	0	0	
95 to 100	97.5	72.2	35.7	0	5	1	6	1	1	0	4	2	1	0	4	2	1	0	4	868	646	1	1	1	1	0	4	868	461	0	1	0	9	
90 to 95	92.5	73.8	37.3	0	33	7	40	8	8	0	24	11	5	0	24	11	5	0	24	759	565	3	6	8	8	0	24	759	404	2	5	2	61	
85 to 90	87.5	71.3	35.1	0	92	30	122	25	25	0	73	33	17	0	73	33	17	0	73	651	485	8	16	25	25	0	73	651	346	6	13	6	185	
80 to 85	82.5	69.2	33.2	8	330	162	500	100	102	0	298	134	68	0	298	134	68	0	298	542	404	28	56	100	102	0	298	542	288	21	44	19	1,764	
75 to 80	77.5	67.4	31.8	98	257	265	620	125	126	0	369	166	85	0	369	166	85	0	369	434	323	27	56	125	126	0	369	434	231	20	43	19	1,045	
70 to 75	72.5	64.6	29.7	325	236	286	847	170	173	0	504	227	116	0	504	227	116	0	504	325	242	28	57	170	173	0	504	325	173	21	44	20	1,427	
65 to 70	67.5	60.9	27.0	251	204	216	671	135	137	0	399	180	92	0	399	180	92	0	399	217	162	15	30	135	137	0	399	217	115	11	23	10	1,131	
60 to 65	62.5	56.3	24.0	358	268	301	927	186	189	0	552	248	127	0	552	248	127	0	552	108	81	10	21	186	189	0	552	108	58	8	16	7	1,562	
Heating																																		
55 to 60	57.5	50.3	20.4	217	191	192	600	121	122	0	357	161	82	0	357	161	82	0	357	(422)	(173)	0	94	121	122	0	357	(422)	0	0	0		1,051	94
50 to 55	52.5	46.4	18.3	218	223	289	730	147	149	0	435	196	100	0	435	196	100	0	435	(568)	(307)	23	218	147	149	0	435	(568)	(67)	23	17		1,279	201
45 to 50	47.5	41.8	16.0	243	196	195	634	127	129	0	377	170	87	0	377	170	87	0	377	(713)	(440)	44	279	127	129	0	377	(713)	(200)	44	103		1,000	175
40 to 45	42.5	38.0	14.3	193	171	149	513	103	105	0	305	137	70	0	305	137	70	0	305	(859)	(574)	56	298	103	105	0	305	(859)	(334)	56	156		809	142
35 to 40	37.5	33.9	12.5	357	311	355	1,023	206	209	0	609	274	140	0	609	274	140	0	609	(1,004)	(707)	150	739	206	209	0	609	(1,004)	(467)	150	454		1,613	285
30 to 35	32.5	29.3	10.6	277	221	236	734	147	150	0	437	197	101	0	437	197	101	0	437	(1,150)	(841)	136	634	147	150	0	437	(1,150)	(600)	136	429		1,113	205
25 to 30	27.5	24.3	8.7	159	98	134	391	79	80	0	233	105	54	0	233	105	54	0	233	(1,295)	(974)	87	393	79	80	0	233	(1,295)	(734)	87	283		593	110
20 to 25	22.5	19.3	6.8	89	48	58	195	39	40	0	116	52	27	0	116	52	27	0	116	(1,441)	(1,107)	51	224	39	40	0	116	(1,441)	(867)	51	169		296	55
15 to 20	17.5	14.8	5.3	74	20	31	125	25	25	0	74	33	17	0	74	33	17	0	74	(1,586)	(1,241)	38	161	25	25	0	74	(1,586)	(1,001)	38	126		190	35
10 to 15	12.5	10.0	3.8	35	7	5	47	9	10	0	28	13	6	0	28	13	6	0	28	(1,732)	(1,374)	16	67	9	10	0	28	(1,732)	(1,134)	16	54		71	13
5 to 10	7.5	5.1	2.3	17	9	8	34	7	7	0	20	9	5	0	20	9	5	0	20	(1,877)	(1,508)	13	53	7	7	0	20	(1,877)	(1,268)	13	44		52	10
0 to 5	2.5	0.6	1.0	1	0	0	1	0	0	0	1	0	0	0	1	0	0	0	1	(2,023)	(1,641)	0	2	0	0	0	1	(2,023)	(1,401)	0	1		2	0
-5 to 0	(2.5)	0.0	0.0	0	0	0	0	0	0	0	0	0	0	0	0	0	0	0	0	(2,168)	(1,775)	0	0	0	0	0	0	(2,168)	(1,534)	0	0		0	0
-10 to -5	(7.5)	0.0	0.0	0	0	0	0	0	0	0	0	0	0	0	0	0	0	0	0	(2,314)	(1,908)	0	0	0	0	0	0	(2,314)	(1,668)	0	0		0	0
-15 to -10	(12.5)	0.0	0.0	0	0	0	0	0	0	0	0	0	0	0	0	0	0	0	0	(2,459)	(2,041)	0	0	0	0	0	0	(2,459)	(1,801)	0	0		0	0
-20 to -15	(17.5)	0.0	0.0	0	0	0	0	0	0	0	0	0	0	0	0	0	0	0	0	(2,605)	(2,175)	0	0	0	0	0	0	(2,605)	(1,935)	0	0		0	0
-25 to -20	(22.5)	0.0	0.0	0	0	0	0	0	0	0	0	0	0	0	0	0	0	0	0	(2,751)	(2,308)	0	0	0	0	0	0	(2,751)	(2,068)	0	0		0	0
				2,920	2,920	2,920	8,760	1,760	1,786	0	5,214	2,346	1,200	0	5,214	2,346	1,200	0	5,214			734	3,405	1,760	1,786	0	5,214			704	2,025	83	15,251	1,327

Cell Ref.	Comment
A-H	TMY-2 Weather Data for Newark, NJ
I - L	Existing Occupancy hours
M - P	Existing Heating/Cooling hours
Q - T	Existing Motor Operating Hours
U	Occupied Cooling and Heating loads (MBH)
V	Unoccupied Cooling and Heating loads (MBH)
W	Cooling = [col U] x ([col M] + [col O]) ÷ 1,000 ÷ AD45
	Heating = -MIN([col I] + [col K] , [col M] + [col O]) x MIN([col U] + internal gains , 0) + IF([col I] + [col K] > [col M]+[col O] , (([col I] + [col K]) - ([col M] + [col O])) x MIN([col V] + internal gains , 0) , 0) ÷ 1,000 ÷ AD44
X	Cooling = [col R] x ([col J] + [col L]) ÷ 1,000 ÷ AD45
	Heating = -([col N] + [col P]) x MIN([col V] + internal gains , 0) + IF([col I] + [col K] < [col M] + [col O] , (([col M] + [col O]) - ([col I] + [col K])) x MIN([col U] + internal gains , 0)) ÷ 1,000 ÷ AD44
Y ÷ AB	Proposed Operating hours
AC	Proposed Occupied Cooling and Heating Loads:
	Cooling = ([col B] - AC60) ÷ ([col B] - AC55) x [col U]
	Heating = ([col B] - AE60) ÷ ([col B] - AE55) x [col U]
AD	Proposed Unoccupied Cooling and Heating Loads:
	Cooling = ([col B] - AC61) ÷ ([col B] - AC56) x [col V]
	Heating = ([col B] - AE61) ÷ ([col B] - AE56) x [col V] ([col V] is modified to account for reduced kitchen and building ventilation due to EMS)
AE	Cooling = [col AC] x ([col Y] + [col AA]) ÷ 1,000 ÷ AD45
	Heating = -MIN([col I] + [col K] , [col Y] + [col AA]) x MIN([col AC] + internal gains , 0) + IF([col I] + [col K] > [col Y]+[col AA] , (([col I] + [col K]) - ([col Y] + [col AA])) x MIN([col AD] + internal gains , 0) , 0) ÷ 1,000 ÷ AD44
AF	Cooling = [col AD] x ([col Z] + [col AB]) ÷ 1,000 ÷ AD45
	Heating = -([col Z] + [col AB]) x MIN([col AD] + internal gains , 0) + IF([col I] + [col K] < [col Y] + [col AA] , (([col Y] + [col AA]) - ([col I] + [col K])) x MIN([col AC] + internal gains , 0)) ÷ 1,000 ÷ AD44
AG	= ([col W] + [col X]) - ([col AE] + [col AF])
	HVAC Fan and Pump Savings
AH	Cooling =([col Q] + [col S] + ([col R] + [col T]) x AD49) x (AD46 + AD48) - ((col Y] + [col AA] + ([col Z] + [col AB]) x AD49) x (AD46 + AD48)
	Heating =([col Q] + [col S]) x AD46 + IF(B20<35,([col R] + [col T]) x AD49 x AD46, IF(B20>50,0,([col R] + [col T]) x AD49 x AD46)) - (([col Y] + [col AA]) x AD46 + IF(B20<35,([col Z] + [col AB]) x AD49 x AD46, IF(B20>50,0,([col Z] + [col AB]) x AD49 x AD46)))
AI	= ([col W] + [col X]) - ([col AE] + [col AF])

Assumptions:	Value	Unit	CELL	Description
			REF	
Occupied Area	48,195	SF	AD43	
Existing Heating Plant Efficiency	76.0%		AD44	
Existing Chiller Efficiency	2.6	COP	AD45	
Fan Power	25.2	kW	AD46	
Heating Pump Power	1.0	kW	AD47	
Cooling Pump Power	0.0	kW	AD48	
UnOcc. Fan & Pump Cycling	10.0%		AD49	% Operating Hours During UnOcc.
UnOcc. Kitchen Vent. Reduction	0.0%		AD50	% CFM Saved
UnOcc. Ventilation Reduction	0.0%		AD51	% CFM Saved

Average Existing Space Temperatures					
	Cooling		Heating		Description
Occupied	74.0	AC55	72.0	AE55	
UnOccupied	80.0	AC56	64.0	AE56	

Average Proposed Space Temperatures					
	Cooling		Heating		Description
Occupied	74.0	AC60	72.0	AE60	
UnOccupied	85.0	AC61	55.0	AE61	

Page content is subject to Confidentiality Restrictions

Project Template
Ryerson-Elementary School
Integrated and New Energy Management Systems

TMY-2 Weather Data for Newark, NJ								Existing Occupancy Schedule				Existing Heating/Cooling Schedule				Existing Motor Operating Schedule				Existing				Proposed							Savings		
Amb. Temp Bin deg. F	Ave Temp deg. F	M.C.W.B deg. F	M.C. Enthalpy Btu/lbma	01-08 Hours	09-16 Hours	17-24 Hours	Total Bin Hours	Occ On-Peak Hrs.	UnOcc On-Peak Hrs.	Occ Off-Peak Hrs.	UnOcc Off-Peak Hrs.	Occ On-Peak Hrs.	UnOcc On-Peak Hrs.	Occ Off-Peak Hrs.	UnOcc Off-Peak Hrs.	Occ On-Peak Hrs.	UnOcc On-Peak Hrs.	Occ Off-Peak Hrs.	UnOcc Off-Peak Hrs.	Occ. Cool/ Heat Load (MBH)	UnOcc. Cool/ Heat Load (MBH)	Occ Cooling/Heating Energy Consump. (MMBTU)	UnOcc Cooling/Heating Energy Consump. (MMBTU)	Occ On-Peak Hrs.	UnOcc On-Peak Hrs.	Occ Off-Peak Hrs.	UnOcc Off-Peak Hrs.	Occ. Cool/ Heat Load (MBH)	UnOcc. Cool/ Heat Load (MBH)	Occ Cooling/Heating Energy Consump. (MMBTU)	UnOcc Cooling/Heating Energy Consump. (MMBTU)	Cooling Energy Savings (MMBTU)	HVAC Electrical Savings (kWh)	Heating Energy Savings (MMBTU)
A	B	C	D	E	F	G	H	I	J	K	L	M	N	O	P	Q	R	S	T	U	V	W	X	Y	Z	AA	AB	AC	AD	AE	AF	AG	AH	AI
Cooling																																		
105 to 110	107.5	0.0	0.0	0	0	0	0	0	0	0	0	0	0	0	0	0	0	0	0	438	326	0	0	0	0	0	0	438	233	0	0	0	0	
100 to 105	102.5	0.0	0.0	0	0	0	0	0	0	0	0	0	0	0	0	0	0	0	0	394	293	0	0	0	0	0	0	394	210	0	0	0	0	
95 to 100	97.5	72.2	35.7	0	5	1	6	1	1	0	4	2	1	0	4	2	1	0	4	350	261	0	0	1	1	0	4	350	186	0	0	0	5	
90 to 95	92.5	73.8	37.3	0	33	7	40	9	7	0	24	13	4	0	24	13	4	0	24	306	228	1	2	9	7	0	24	306	163	1	1	1	35	
85 to 90	87.5	71.3	35.1	0	92	30	122	29	21	0	73	38	11	0	73	38	11	0	73	263	196	3	5	29	21	0	73	263	140	2	4	2	107	
80 to 85	82.5	69.2	33.2	8	330	162	500	117	85	0	298	156	46	0	298	156	46	0	298	219	163	10	16	117	85	0	298	219	116	7	13	6	913	
75 to 80	77.5	67.4	31.8	98	257	265	620	145	106	0	369	194	57	0	369	194	57	0	369	175	130	10	16	145	106	0	369	175	93	7	13	6	602	
70 to 75	72.5	64.6	29.7	325	236	286	847	199	144	0	504	265	78	0	504	265	78	0	504	131	98	10	16	199	144	0	504	131	70	7	13	6	822	
65 to 70	67.5	60.9	27.0	251	204	216	671	157	114	0	399	210	62	0	399	210	62	0	399	88	65	5	9	157	114	0	399	88	47	4	7	3	652	
60 to 65	62.5	56.3	24.0	358	268	301	927	217	158	0	552	290	86	0	552	290	86	0	552	44	33	4	6	217	158	0	552	44	23	3	5	2	900	
Heating																																		
55 to 60	57.5	50.3	20.4	217	191	192	600	141	102	0	357	188	55	0	357	188	55	0	357	(375)	(166)	3	92	141	102	0	357	(375)	0	3	0		905	92
50 to 55	52.5	46.4	18.3	218	223	289	730	171	124	0	435	228	67	0	435	228	67	0	435	(505)	(264)	33	186	171	124	0	435	(505)	(49)	33	10		1,101	176
45 to 50	47.5	41.8	16.0	243	196	195	634	149	108	0	377	198	59	0	377	198	59	0	377	(634)	(362)	54	226	149	108	0	377	(634)	(147)	54	71		860	155
40 to 45	42.5	38.0	14.3	193	171	149	513	120	87	0	305	160	47	0	305	160	47	0	305	(764)	(460)	64	235	120	87	0	305	(764)	(245)	64	108		696	127
35 to 40	37.5	33.9	12.5	357	311	355	1,023	240	174	0	609	320	94	0	609	320	94	0	609	(893)	(558)	169	573	240	174	0	609	(893)	(343)	169	316		1,388	257
30 to 35	32.5	29.3	10.6	277	221	236	734	172	125	0	437	229	68	0	437	229	68	0	437	(1,023)	(656)	150	486	172	125	0	437	(1,023)	(440)	150	299		641	187
25 to 30	27.5	24.3	8.7	159	98	134	391	92	67	0	233	122	36	0	233	122	36	0	233	(1,152)	(754)	96	299	92	67	0	233	(1,152)	(538)	96	198		342	101
20 to 25	22.5	19.3	6.8	89	48	58	195	46	33	0	116	61	18	0	116	61	18	0	116	(1,282)	(851)	55	169	46	33	0	116	(1,282)	(636)	55	118		170	51
15 to 20	17.5	14.8	5.3	74	20	31	125	29	21	0	74	39	12	0	74	39	12	0	74	(1,411)	(949)	41	121	29	21	0	74	(1,411)	(734)	41	88		109	33
10 to 15	12.5	10.0	3.8	35	7	5	47	11	8	0	28	15	4	0	28	15	4	0	28	(1,541)	(1,047)	17	50	11	8	0	28	(1,541)	(832)	17	38		41	13
5 to 10	7.5	5.1	2.3	17	9	8	34	8	6	0	20	11	3	0	20	11	3	0	20	(1,670)	(1,145)	14	40	8	6	0	20	(1,670)	(930)	14	31		30	9
0 to 5	2.5	0.6	1.0	1	0	0	1	0	0	0	1	0	0	0	1	0	0	0	1	(1,800)	(1,243)	0	1	0	0	0	1	(1,800)	(1,028)	0	1		1	0
-5 to 0	(2.5)	0.0	0.0	0	0	0	0	0	0	0	0	0	0	0	0	0	0	0	0	(1,929)	(1,341)	0	0	0	0	0	0	(1,929)	(1,125)	0	0		0	0
-10 to -5	(7.5)	0.0	0.0	0	0	0	0	0	0	0	0	0	0	0	0	0	0	0	0	(2,059)	(1,439)	0	0	0	0	0	0	(2,059)	(1,223)	0	0		0	0
-15 to -10	(12.5)	0.0	0.0	0	0	0	0	0	0	0	0	0	0	0	0	0	0	0	0	(2,188)	(1,536)	0	0	0	0	0	0	(2,188)	(1,321)	0	0		0	0
-20 to -15	(17.5)	0.0	0.0	0	0	0	0	0	0	0	0	0	0	0	0	0	0	0	0	(2,318)	(1,634)	0	0	0	0	0	0	(2,318)	(1,419)	0	0		0	0
-25 to -20	(22.5)	0.0	0.0	0	0	0	0	0	0	0	0	0	0	0	0	0	0	0	0	(2,447)	(1,732)	0	0	0	0	0	0	(2,447)	(1,517)	0	0		0	0
				2,920	2,920	2,920	8,760	2,053	1,493	0	5,214	2,738	809	0	5,214	2,738	809	0	5,214			738	2,547	2,053	1,493	0	5,214			727	1,331	25	10,319	1,202

Cell Ref.	Comment
A-H	TMY-2 Weather Data for Newark, NJ
I - L	Existing Occupancy hours
M - P	Existing Heating/Cooling hours
Q - T	Existing Motor Operating Hours
U	Occupied Cooling and Heating loads (MBH)
V	Unoccupied Cooling and Heating loads (MBH)
W	Cooling = [col U] x ([col M] + [col O]) ÷ 1,000 ÷ AD45
	Heating = -MIN([col I] + [col K] , [col M] + [col O]) x MIN([col U] + internal gains , 0) + IF([col I] + [col K] > [col M]+[col O] , (([col I] + [col K]) - ([col M] + [col O])) x MIN([col V] + internal gains , 0) , 0) ÷ 1,000 ÷ AD44
X	Cooling = [col R] x ([col J] + [col L]) ÷ 1,000 ÷ AD45
	Heating = -([col N] + [col P]) x MIN([col V] + internal gains , 0) + IF([col I] + [col K] < [col M] + [col O] , (([col M] + [col O]) - ([col I] + [col K])) x MIN([col U] + internal gains , 0)) ÷ 1,000 ÷ AD44
Y ÷ AB	Proposed Operating hours
AC	Proposed Occupied Cooling and Heating Loads:
	Cooling = ([col B] - AC60) ÷ ([col B] - AC55) x [col U]
	Heating = ([col B] - AE60) ÷ ([col B] - AE55) x [col U]
AD	Proposed Unoccupied Cooling and Heating Loads:
	Cooling = ([col B] - AC61) ÷ ([col B] - AC56) x [col V]
	Heating = ([col B] - AE61) ÷ ([col B] - AE56) x [col V] ([col V] is modified to account for reduced kitchen and building ventilation due to EMS)
AE	Cooling = [col AC] x ([col Y] + [col AA]) ÷ 1,000 ÷ AD45
	Heating = -MIN([col I] + [col K] , [col Y] + [col AA]) x MIN([col AC] + internal gains , 0) + IF([col I] + [col K] > [col Y]+[col AA] , (([col I] + [col K]) - ([col Y] + [col AA])) x MIN([col AD] + internal gains , 0) , 0) ÷ 1,000 ÷ AD44
AF	Cooling = [col AD] x ([col Z] + [col AB]) ÷ 1,000 ÷ AD45
	Heating = -([col Z] + [col AB]) x MIN([col AD] + internal gains , 0) + IF([col I] + [col K] < [col Y] + [col AA] , (([col Y] + [col AA]) - ([col I] + [col K])) x MIN([col AC] + internal gains , 0)) ÷ 1,000 ÷ AD44
AG	= ([col W] + [col X]) - ([col AE] + [col AF])
	HVAC Fan and Pump Savings
AH	Cooling =([col Q] + [col S] + ([col R] + [col T]) x AD49) x (AD46 + AD48) - ((col Y] + [col AA] + ([col Z] + [col AB]) x AD49) x (AD46 + AD48)
	Heating =([col Q] + [col S]) x AD46 + IF(B20<35,([col R] + [col T]) x AD49 x AD46, IF(B20>50,0,([col R] + [col T]) x AD49 x AD46)) - (([col Y] + [col AA]) x AD46 + IF(B20<35,([col Z] + [col AB]) x AD49 x AD46, IF(B20>50,0,([col Z] + [col AB]) x AD49 x AD46)))
AI	= ([col W] + [col X]) - ([col AE] + [col AF])

Assumptions:	Value	Unit	CELL	Description
			REF	
Occupied Area	48,634	SF	AD43	
Existing Heating Plant Efficiency	76.0%		AD44	
Existing Chiller Efficiency	3.5	COP	AD45	
Fan Power	12.4	kW	AD46	
Heating Pump Power	6.9	kW	AD47	
Cooling Pump Power	0.0	kW	AD48	
UnOcc. Fan & Pump Cycling	10.0%		AD49	% Operating Hours During UnOcc.
UnOcc. Kitchen Vent. Reduction	0.0%		AD50	% CFM Saved
UnOcc. Ventilation Reduction	0.0%		AD51	% CFM Saved

Average Existing Space Temperatures					
	Cooling		Heating		Description
Occupied	74.0	AC55	72.0	AE55	
UnOccupied	80.0	AC56	66.0	AE56	

Average Proposed Space Temperatures					
	Cooling		Heating		Description
Occupied	74.0	AC60	72.0	AE60	
UnOccupied	85.0	AC61	55.0	AE61	

Page content is subject to Confidentiality Restrictions

Project Template
Albert Payson Terhune-Elementary School
Integrated and New Energy Management Systems

TMY-2 Weather Data for Newark, NJ								Existing Occupancy Schedule				Existing Heating/Cooling Schedule				Existing Motor Operating Schedule				Existing				Proposed								Savings		
Amb. Temp Bin deg. F	Ave Temp deg. F	M.C.W.B deg. F	M.C. Enthalpy Btu/lbma	01-08 Hours	09-16 Hours	17-24 Hours	Total Bin Hours	Occ On-Peak Hrs.	UnOcc On-Peak Hrs.	Occ Off-Peak Hrs.	UnOcc Off-Peak Hrs.	Occ On-Peak Hrs.	UnOcc On-Peak Hrs.	Occ Off-Peak Hrs.	UnOcc Off-Peak Hrs.	Occ On-Peak Hrs.	UnOcc On-Peak Hrs.	Occ Off-Peak Hrs.	UnOcc Off-Peak Hrs.	Occ. Cool/ Heat Load (MBH)	UnOcc. Cool/ Heat Load (MBH)	Occ Cooling/Heating Energy Consump. (MMBTU)	UnOcc Cooling/Heating Energy Consump. (MMBTU)	Occ On-Peak Hrs.	UnOcc On-Peak Hrs.	Occ Off-Peak Hrs.	UnOcc Off-Peak Hrs.	Occ. Cool/ Heat Load (MBH)	UnOcc. Cool/ Heat Load (MBH)	Occ Cooling/Heating Energy Consump. (MMBTU)	UnOcc Cooling/Heating Energy Consump. (MMBTU)	Cooling Energy Savings (MMBTU)	HVAC Electrical Savings (kWh)	Heating Energy Savings (MMBTU)
A	B	C	D	E	F	G	H	I	J	K	L	M	N	O	P	Q	R	S	T	U	V	W	X	Y	Z	AA	AB	AC	AD	AE	AF	AG	AH	AI
Cooling																																		
105 to 110	107.5	0.0	0.0	0	0	0	0	0	0	0	0	0	0	0	0	0	0	0	0	314	234	0	0	0	0	0	0	314	167	0	0	0	0	
100 to 105	102.5	0.0	0.0	0	0	0	0	0	0	0	0	0	0	0	0	0	0	0	0	282	210	0	0	0	0	0	0	282	150	0	0	0	0	
95 to 100	97.5	72.2	35.7	0	5	1	6	1	1	0	4	1	1	0	4	1	1	0	4	251	187	0	0	1	1	0	4	251	133	0	0	0	4	
90 to 95	92.5	73.8	37.3	0	33	7	40	8	8	0	24	10	6	0	24	10	6	0	24	220	164	1	1	8	8	0	24	220	117	1	1	0	26	
85 to 90	87.5	71.3	35.1	0	92	30	122	25	25	0	73	30	19	0	73	30	19	0	73	188	140	2	4	25	25	0	73	188	100	1	3	1	79	
80 to 85	82.5	69.2	33.2	8	330	162	500	100	102	0	298	123	80	0	298	123	80	0	298	157	117	6	13	100	102	0	298	157	83	5	10	4	962	
75 to 80	77.5	67.4	31.8	98	257	265	620	125	126	0	369	152	99	0	369	152	99	0	369	125	93	6	13	125	126	0	369	125	67	5	10	4	443	
70 to 75	72.5	64.6	29.7	325	236	286	847	170	173	0	504	208	135	0	504	208	135	0	504	94	70	6	13	170	173	0	504	94	50	5	10	4	606	
65 to 70	67.5	60.9	27.0	251	204	216	671	135	137	0	399	165	107	0	399	165	107	0	399	63	47	3	7	135	137	0	399	63	33	3	5	2	480	
60 to 65	62.5	56.3	24.0	358	268	301	927	186	189	0	552	228	148	0	552	228	148	0	552	31	23	2	5	186	189	0	552	31	17	2	4	2	663	
Heating																																		
55 to 60	57.5	50.3	20.4	217	191	192	600	121	122	0	357	147	96	0	357	147	96	0	357	(335)	0	0	10	121	122	0	357	(335)	0	0	0		463	10
50 to 55	52.5	46.4	18.3	218	223	289	730	147	149	0	435	179	116	0	435	179	116	0	435	(443)	(49)	10	24	147	149	0	435	(443)	(49)	10	7		563	17
45 to 50	47.5	41.8	16.0	243	196	195	634	127	129	0	377	156	101	0	377	156	101	0	377	(551)	(146)	27	86	127	129	0	377	(551)	(146)	27	71		440	15
40 to 45	42.5	38.0	14.3	193	171	149	513	103	105	0	305	126	82	0	305	126	82	0	305	(659)	(243)	36	122	103	105	0	305	(659)	(243)	36	110		356	13
35 to 40	37.5	33.9	12.5	357	311	355	1,023	206	209	0	609	251	163	0	609	251	163	0	609	(767)	(340)	102	349	206	209	0	609	(767)	(340)	102	324		710	26
30 to 35	32.5	29.3	10.6	277	221	236	734	147	150	0	437	180	117	0	437	180	117	0	437	(874)	(437)	94	326	147	150	0	437	(874)	(437)	94	307		472	19
25 to 30	27.5	24.3	8.7	159	98	134	391	79	80	0	233	96	62	0	233	96	62	0	233	(982)	(534)	61	214	79	80	0	233	(982)	(534)	61	203		252	10
20 to 25	22.5	19.3	6.8	89	48	58	195	39	40	0	116	48	31	0	116	48	31	0	116	(1,090)	(631)	36	127	39	40	0	116	(1,090)	(631)	36	121		125	5
15 to 20	17.5	14.8	5.3	74	20	31	125	25	25	0	74	31	20	0	74	31	20	0	74	(1,198)	(728)	27	94	25	25	0	74	(1,198)	(728)	27	91		80	3
10 to 15	12.5	10.0	3.8	35	7	5	47	9	10	0	28	12	7	0	28	12	7	0	28	(1,306)	(825)	11	40	9	10	0	28	(1,306)	(825)	11	39		30	1
5 to 10	7.5	5.1	2.3	17	9	8	34	7	7	0	20	8	5	0	20	8	5	0	20	(1,414)	(922)	9	33	7	7	0	20	(1,414)	(922)	9	32		22	1
0 to 5	2.5	0.6	1.0	1	0	0	1	0	0	0	1	0	0	0	1	0	0	0	1	(1,522)	(1,019)	0	1	0	0	0	1	(1,522)	(1,019)	0	1		1	0
-5 to 0	(2.5)	0.0	0.0	0	0	0	0	0	0	0	0	0	0	0	0	0	0	0	0	(1,630)	(1,116)	0	0	0	0	0	0	(1,630)	(1,116)	0	0		0	0
-10 to -5	(7.5)	0.0	0.0	0	0	0	0	0	0	0	0	0	0	0	0	0	0	0	0	(1,738)	(1,213)	0	0	0	0	0	0	(1,738)	(1,213)	0	0		0	0
-15 to -10	(12.5)	0.0	0.0	0	0	0	0	0	0	0	0	0	0	0	0	0	0	0	0	(1,846)	(1,310)	0	0	0	0	0	0	(1,846)	(1,310)	0	0		0	0
-20 to -15	(17.5)	0.0	0.0	0	0	0	0	0	0	0	0	0	0	0	0	0	0	0	0	(1,954)	(1,408)	0	0	0	0	0	0	(1,954)	(1,408)	0	0		0	0
-25 to -20	(22.5)	0.0	0.0	0	0	0	0	0	0	0	0	0	0	0	0	0	0	0	0	(2,062)	(1,505)	0	0	0	0	0	0	(2,062)	(1,505)	0	0		0	0
				2,920	2,920	2,920	8,760	1,760	1,786	0	5,214	2,151	1,395	0	5,214	2,151	1,395	0	5,214			439	1,483	1,760	1,786	0	5,214			435	1,349	18	6,775	121

Cell Ref.	Comment
A-H	TMY-2 Weather Data for Newark, NJ
I - L	Existing Occupancy hours
M - P	Existing Heating/Cooling hours
Q - T	Existing Motor Operating Hours
U	Occupied Cooling and Heating loads (MBH)
V	Unoccupied Cooling and Heating loads (MBH)
W	Cooling = [col U] x ([col M] + [col O]) ÷ 1,000 ÷ AD45
	Heating = -MIN([col I] + [col K] , [col M] + [col O]) x MIN([col U] + internal gains , 0) + IF([col I] + [col K] > [col M]+[col O] , (([col I] + [col K]) - ([col M] + [col O])) x MIN([col V] + internal gains , 0) , 0) ÷ 1,000 ÷ AD44
X	Cooling = [col R] x ([col J] + [col L]) ÷ 1,000 ÷ AD45
	Heating = -([col N] + [col P]) x MIN([col V] + internal gains , 0) + IF([col I] + [col K] < [col M] + [col O] , (([col M] + [col O]) - ([col I] + [col K])) x MIN([col U] + internal gains , 0)) ÷ 1,000 ÷ AD44
Y ÷ AB	Proposed Operating hours
AC	Proposed Occupied Cooling and Heating Loads:
	Cooling = ([col B] - AC60) ÷ ([col B] - AC55) x [col U]
	Heating = ([col B] - AE60) ÷ ([col B] - AE55) x [col U]
AD	Proposed Unoccupied Cooling and Heating Loads:
	Cooling = ([col B] - AC61) ÷ ([col B] - AC56) x [col V]
	Heating = ([col B] - AE61) ÷ ([col B] - AE56) x [col V] ([col V] is modified to account for reduced kitchen and building ventilation due to EMS)
AE	Cooling = [col AC] x ([col Y] + [col AA]) ÷ 1,000 ÷ AD45
	Heating = -MIN([col I] + [col K] , [col Y] + [col AA]) x MIN([col AC] + internal gains , 0) + IF([col I] + [col K] > [col Y]+[col AA] , (([col I] + [col K]) - ([col Y] + [col AA])) x MIN([col AD] + internal gains , 0) , 0) ÷ 1,000 ÷ AD44
AF	Cooling = [col AD] x ([col Z] + [col AB]) ÷ 1,000 ÷ AD45
	Heating = -([col Z] + [col AB]) x MIN([col AD] + internal gains , 0) + IF([col I] + [col K] < [col Y] + [col AA] , (([col Y] + [col AA]) - ([col I] + [col K])) x MIN([col AC] + internal gains , 0)) ÷ 1,000 ÷ AD44
AG	÷ ([col W] + [col X]) - ([col AE] + [col AF])
	HVAC Fan and Pump Savings
AH	Cooling =([col Q] + [col S] + ([col R] + [col T]) x AD49) x (AD46 + AD48) - (([col Y] + [col AA] + ([col Z] + [col AB]) x AD49) x (AD46 + AD48)
	Heating =([col Q] + [col S]) x AD46 + IF(B20<35,([col R] + [col T]) x AD49 x AD46, IF(B20>50,0,([col R] + [col T]) x AD49 x AD46)) - (([col Y] + [col AA]) x AD46 + IF(B20<35,([col Z] + [col AB]) x AD49 x AD46, IF(B20>50,0,([col Z] + [col AB]) x AD49 x AD46)))
AI	÷ ([col W] + [col X]) - ([col AE] + [col AF])

Assumptions:	Value	Unit	CELL REF	Description
Occupied Area	46,470	SF	AD43	
Existing Heating Plant Efficiency	76.0%		AD44	
Existing Chiller Efficiency	3.4	COP	AD45	
Fan Power	16.0	kW	AD46	
Heating Pump Power	1.3	kW	AD47	
Cooling Pump Power	0.0	kW	AD48	
UnOcc. Fan & Pump Cycling	10.0%		AD49	% Operating Hours During UnOcc.
UnOcc. Kitchen Vent. Reduction	0.0%		AD50	% CFM Saved
UnOcc. Ventilation Reduction	0.0%		AD51	% CFM Saved

Average Existing Space Temperatures					
	Cooling		Heating		Description
Occupied	74.0	AC55	73.0	AE55	
UnOccupied	80.0	AC56	55.0	AE56	

Average Proposed Space Temperatures					
	Cooling		Heating		Description
Occupied	74.0	AC60	73.0	AE60	
UnOccupied	85.0	AC61	55.0	AE61	

Page content is subject to Confidentiality Restrictions

Project Template
Anthony Wayne-Middle School
Integrated and New Energy Management Systems

TMY-2 Weather Data for Newark, NJ								Existing Occupancy Schedule				Existing Heating/Cooling Schedule				Existing Motor Operating Schedule				Existing				Proposed								Savings		
Amb. Temp Bin deg. F	Ave Temp deg. F	M.C.W.B deg. F	M.C. Enthalpy Btu/lbma	01-08 Hours	09-16 Hours	17-24 Hours	Total Bin Hours	Occ On-Peak Hrs.	UnOcc On-Peak Hrs.	Occ Off-Peak Hrs.	UnOcc Off-Peak Hrs.	Occ On-Peak Hrs.	UnOcc On-Peak Hrs.	Occ Off-Peak Hrs.	UnOcc Off-Peak Hrs.	Occ On-Peak Hrs.	UnOcc On-Peak Hrs.	Occ Off-Peak Hrs.	UnOcc Off-Peak Hrs.	Occ. Cool/ Heat Load (MBH)	UnOcc. Cool/ Heat Load (MBH)	Occ Cooling/Heating Energy Consump. (MMBTU)	UnOcc Cooling/Heating Energy Consump. (MMBTU)	Occ On-Peak Hrs.	UnOcc On-Peak Hrs.	Occ Off-Peak Hrs.	UnOcc Off-Peak Hrs.	Occ. Cool/ Heat Load (MBH)	UnOcc. Cool/ Heat Load (MBH)	Occ Cooling/Heating Energy Consump. (MMBTU)	UnOcc Cooling/Heating Energy Consump. (MMBTU)	Cooling Energy Savings (MMBTU)	HVAC Electrical Savings (kWh)	Heating Energy Savings (MMBTU)
A	**B**	**C**	**D**	**E**	**F**	**G**	**H**	**I**	**J**	**K**	**L**	**M**	**N**	**O**	**P**	**Q**	**R**	**S**	**T**	**U**	**V**	**W**	**X**	**Y**	**Z**	**AA**	**AB**	**AC**	**AD**	**AE**	**AF**	**AG**	**AH**	**AI**
Cooling																																		
105 to 110	107.5	0.0	0.0	0	0	0	0	0	0	0	0	0	0	0	0	0	0	0	0	4,663	3,473	0	0	0	0	0	0	4,663	2,481	0	0	0	0	
100 to 105	102.5	0.0	0.0	0	0	0	0	0	0	0	0	0	0	0	0	0	0	0	0	4,197	3,125	0	0	0	0	0	0	4,197	2,232	0	0	0	0	
95 to 100	97.5	72.2	35.7	0	5	1	6	2	0	1	3	2	0	1	2	2	0	1	2	3,731	2,778	5	2	2	0	1	3	3,731	1,984	4	2	1	52	
90 to 95	92.5	73.8	37.3	0	33	7	40	16	0	4	20	16	0	8	16	16	0	8	16	3,264	2,431	28	14	16	0	4	20	3,264	1,736	23	13	6	350	
85 to 90	87.5	71.3	35.1	0	92	30	122	49	0	11	61	49	0	23	49	49	0	23	49	2,798	2,084	73	37	49	0	11	61	2,798	1,488	61	33	16	1,066	
80 to 85	82.5	69.2	33.2	8	330	162	500	202	0	46	252	202	0	95	202	202	0	95	202	2,332	1,736	249	126	202	0	46	252	2,332	1,240	208	112	56	6,836	
75 to 80	77.5	67.4	31.8	98	257	265	620	251	0	57	312	251	0	118	251	251	0	118	251	1,865	1,389	247	125	251	0	57	312	1,865	992	206	111	55	6,021	
70 to 75	72.5	64.6	29.7	325	236	286	847	343	0	77	427	343	0	161	343	343	0	161	343	1,399	1,042	253	128	343	0	77	427	1,399	744	211	114	56	8,225	
65 to 70	67.5	60.9	27.0	251	204	216	671	272	0	61	338	272	0	128	272	272	0	128	272	933	695	134	68	272	0	61	338	933	496	112	60	30	6,516	
60 to 65	62.5	56.3	24.0	358	268	301	927	375	0	85	467	375	0	177	375	375	0	177	375	466	347	92	47	375	0	85	467	466	248	77	42	21	9,002	
Heating																																		
55 to 60	57.5	50.3	20.4	217	191	192	600	243	0	55	302	243	0	114	243	243	0	114	243	(936)	(705)	63	239	243	0	55	302	(876)	0	42	0		6,389	260
50 to 55	52.5	46.4	18.3	218	223	289	730	296	0	67	368	296	0	139	295	296	0	139	295	(1,239)	(987)	205	415	296	0	67	368	(1,178)	(141)	180	28		7,774	412
45 to 50	47.5	41.8	16.0	243	196	195	634	257	0	58	320	257	0	121	257	257	0	121	257	(1,541)	(1,269)	290	467	257	0	58	320	(1,480)	(423)	267	130		6,076	359
40 to 45	42.5	38.0	14.3	193	171	149	513	208	0	47	259	208	0	98	208	208	0	98	208	(1,843)	(1,551)	325	465	208	0	47	259	(1,782)	(705)	307	191		4,917	292
35 to 40	37.5	33.9	12.5	357	311	355	1,023	414	0	93	516	414	0	195	414	414	0	195	414	(2,145)	(1,833)	827	1,099	414	0	93	516	(2,084)	(987)	791	551		9,804	584
30 to 35	32.5	29.3	10.6	277	221	236	734	297	0	67	370	297	0	140	297	297	0	140	297	(2,447)	(2,115)	722	913	297	0	67	370	(2,386)	(1,269)	696	518		6,415	421
25 to 30	27.5	24.3	8.7	159	98	134	391	158	0	36	197	158	0	74	158	158	0	74	158	(2,749)	(2,397)	453	552	158	0	36	197	(2,688)	(1,551)	440	341		3,417	225
20 to 25	22.5	19.3	6.8	89	48	58	195	79	0	18	98	79	0	37	79	79	0	37	79	(3,051)	(2,679)	260	308	79	0	18	98	(2,991)	(1,833)	254	203		1,704	113
15 to 20	17.5	14.8	5.3	74	20	31	125	51	0	11	63	51	0	24	51	51	0	24	51	(3,353)	(2,961)	189	219	51	0	11	63	(3,293)	(2,115)	184	151		1,092	73
10 to 15	12.5	10.0	3.8	35	7	5	47	19	0	4	24	19	0	9	19	19	0	9	19	(3,655)	(3,243)	79	90	19	0	4	24	(3,595)	(2,397)	78	64		411	27
5 to 10	7.5	5.1	2.3	17	9	8	34	14	0	3	17	14	0	6	14	14	0	6	14	(3,957)	(3,525)	63	71	14	0	3	17	(3,897)	(2,679)	62	52		297	20
0 to 5	2.5	0.6	1.0	1	0	0	1	0	0	0	1	0	0	0	0	0	0	0	0	(4,259)	(3,808)	2	2	0	0	0	1	(4,199)	(2,961)	2	2		9	1
-5 to 0	(2.5)	0.0	0.0	0	0	0	0	0	0	0	0	0	0	0	0	0	0	0	0	(4,561)	(4,090)	0	0	0	0	0	0	(4,501)	(3,243)	0	0		0	0
-10 to -5	(7.5)	0.0	0.0	0	0	0	0	0	0	0	0	0	0	0	0	0	0	0	0	(4,863)	(4,372)	0	0	0	0	0	0	(4,803)	(3,525)	0	0		0	0
-15 to -10	(12.5)	0.0	0.0	0	0	0	0	0	0	0	0	0	0	0	0	0	0	0	0	(5,166)	(4,654)	0	0	0	0	0	0	(5,105)	(3,808)	0	0		0	0
-20 to -15	(17.5)	0.0	0.0	0	0	0	0	0	0	0	0	0	0	0	0	0	0	0	0	(5,468)	(4,936)	0	0	0	0	0	0	(5,407)	(4,090)	0	0		0	0
-25 to -20	(22.5)	0.0	0.0	0	0	0	0	0	0	0	0	0	0	0	0	0	0	0	0	(5,770)	(5,218)	0	0	0	0	0	0	(5,709)	(4,372)	0	0		0	0
				2,920	2,920	2,920	8,760	3,546	0	799	4,415	3,546	0	1,668	3,546	3,546	0	1,668	3,546			4,561	5,389	3,546	0	799	4,415			4,204	2,718	241	86,374	2,787

Cell Ref.	Comment
A-H	TMY-2 Weather Data for Newark, NJ
I - L	Existing Occupancy hours
M - P	Existing Heating/Cooling hours
Q - T	Existing Motor Operating Hours
U	Occupied Cooling and Heating loads (MBH)
V	Unoccupied Cooling and Heating loads (MBH)
W	Cooling = [col U] x ([col M] + [col O]) ÷ 1,000 ÷ AD45
	Heating = -MIN([col I] + [col K] , [col M] + [col O]) x MIN([col U] + internal gains , 0) + IF([col I] + [col K] > [col M]+[col O] , (([col I] + [col K]) - ([col M] + [col O])) x MIN([col V] + internal gains , 0) , 0) ÷ 1,000 ÷ AD44
X	Cooling = [col R] x ([col J] + [col L]) ÷ 1,000 ÷ AD45
	Heating = -([col N] + [col P]) x MIN([col V] + internal gains , 0) + IF([col I] + [col K] < [col M] + [col O] , (([col M] + [col O]) - ([col I] + [col K])) x MIN([col U] + internal gains , 0)) ÷ 1,000 ÷ AD44
Y ÷ AB	Proposed Operating hours
AC	Proposed Occupied Cooling and Heating Loads:
	Cooling = ([col B] - AC60) ÷ ([col B] - AC55) x [col U]
	Heating = ([col B] - AE60) ÷ ([col B] - AE55) x [col U]
AD	Proposed Unoccupied Cooling and Heating Loads:
	Cooling = ([col B] - AC61) ÷ ([col B] - AC56) x [col V]
	Heating = ([col B] - AE61) ÷ ([col B] - AE56) x [col V] ([col V] is modified to account for reduced kitchen and building ventilation due to EMS)
AE	Cooling = [col AC] x ([col Y] + [col AA]) ÷ 1,000 ÷ AD45
	Heating = -MIN([col I] + [col K] , [col Y] + [col AA]) x MIN([col AC] + internal gains , 0) + IF([col I] + [col K] > [col Y]+[col AA] , (([col I] + [col K]) - ([col Y] + [col AA])) x MIN([col AD] + internal gains , 0) , 0) ÷ 1,000 ÷ AD44
AF	Cooling = [col AD] x ([col Z] + [col AB]) ÷ 1,000 ÷ AD45
	Heating = -([col Z] + [col AB]) x MIN([col AD] + internal gains , 0) + IF([col I] + [col K] < [col Y] + [col AA] , (([col Y] + [col AA]) - ([col I] + [col K])) x MIN([col AC] + internal gains , 0)) ÷ 1,000 ÷ AD44
AG	÷ ([col W] + [col X]) - ([col AE] + [col AF])
	HVAC Fan and Pump Savings
AH	Cooling =([col Q] + [col S] + ([col R] + [col T]) x AD49) x (AD46 + AD48) - ((col Y] + [col AA] + ([col Z] + [col AB]) x AD49) x (AD46 + AD48)
	Heating =([col Q] + [col S]) x AD46 + IF(B20<35,([col R] + [col T]) x AD49 x AD46, IF(B20>50,0,([col R] + [col T]) x AD49 x AD46)) - (([col Y] + [col AA]) x AD46 + IF(B20<35,([col Z] + [col AB]) x AD49 x AD46, IF(B20>50,0,([col Z] + [col AB]) x AD49 x AD46)))
AI	÷ ([col W] + [col X]) - ([col AE] + [col AF])

Assumptions:	Value	Unit	CELL REF	Description
Occupied Area	108,813	SF	**AD43**	
Existing Heating Plant Efficiency	85.3%		**AD44**	
Existing Chiller Efficiency	2.8	COP	**AD45**	
Fan Power	97.9	kW	**AD46**	
Heating Pump Power	9.5	kW	**AD47**	
Cooling Pump Power	0.0	kW	**AD48**	
UnOcc. Fan & Pump Cycling	10.0%		**AD49**	% Operating Hours During UnOcc.
UnOcc. Kitchen Vent. Reduction	0.0%		**AD50**	% CFM Saved
UnOcc. Ventilation Reduction	0.0%		**AD51**	% CFM Saved

Average Existing Space Temperatures					
	Cooling		Heating		Description
Occupied	74.0	**AC55**	73.0	**AE55**	
UnOccupied	80.0	**AC56**	70.0	**AE56**	

Average Proposed Space Temperatures					
	Cooling		Heating		Description
Occupied	74.0	**AC60**	72.0	**AE60**	
UnOccupied	85.0	**AC61**	55.0	**AE61**	

Page content is subject to Confidentiality Restrictions

Project Template
Schuyler-Colfax-Middle School
Integrated and New Energy Management Systems

TMY-2 Weather Data for Newark, NJ								Existing Occupancy Schedule				Existing Heating/Cooling Schedule				Existing Motor Operating Schedule				Existing				Proposed							Savings		
Amb. Temp Bin deg. F	Ave Temp deg. F	M.C.W.B deg. F	M.C. Enthalpy Btu/lbma	01-08 Hours	09-16 Hours	17-24 Hours	Total Bin Hours	Occ On-Peak Hrs.	UnOcc On-Peak Hrs.	Occ Off-Peak Hrs.	UnOcc Off-Peak Hrs.	Occ On-Peak Hrs.	UnOcc On-Peak Hrs.	Occ Off-Peak Hrs.	UnOcc Off-Peak Hrs.	Occ On-Peak Hrs.	UnOcc On-Peak Hrs.	Occ Off-Peak Hrs.	UnOcc Off-Peak Hrs.	Occ. Cool/ Heat Load (MBH)	UnOcc. Cool/ Heat Load (MBH)	Occ Cooling/Heating Energy Consump. (MMBTU)	UnOcc Cooling/Heating Energy Consump. (MMBTU)	Occ On-Peak Hrs.	UnOcc On-Peak Hrs.	Occ Off-Peak Hrs.	UnOcc Off-Peak Hrs.	Occ. Cool/ Heat Load (MBH)	UnOcc. Cool/ Heat Load (MBH)	Occ Cooling/Heating Energy Consump. (MMBTU)	UnOcc Cooling/Heating Energy Consump. (MMBTU)	Cooling Energy Savings (MMBTU)	HVAC Electrical Savings (kWh)	Heating Energy Savings (MMBTU)
A	B	C	D	E	F	G	H	I	J	K	L	M	N	O	P	Q	R	S	T	U	V	W	X	Y	Z	AA	AB	AC	AD	AE	AF	AG	AH	AI
Cooling																																		
105 to 110	107.5	0.0	0.0	0	0	0	0	0	0	0	0	0	0	0	0	0	0	0	0	877	653	0	0	0	0	0	0	877	466	0	0	0	0	
100 to 105	102.5	0.0	0.0	0	0	0	0	0	0	0	0	0	0	0	0	0	0	0	0	789	588	0	0	0	0	0	0	789	420	0	0	0	0	
95 to 100	97.5	72.2	35.7	0	5	1	6	2	1	0	4	2	0	0	4	2	0	0	4	701	522	0	1	2	1	0	4	701	373	0	0	0	14	
90 to 95	92.5	73.8	37.3	0	33	7	40	13	3	0	24	15	2	0	24	15	2	0	24	614	457	3	4	13	3	0	24	614	326	2	3	1	95	
85 to 90	87.5	71.3	35.1	0	92	30	122	39	11	0	73	45	5	0	73	45	5	0	73	526	392	7	9	39	11	0	73	526	280	6	7	3	290	
80 to 85	82.5	69.2	33.2	8	330	162	500	159	44	0	298	184	19	0	298	184	19	0	298	438	326	25	32	159	44	0	298	438	233	22	25	11	3,005	
75 to 80	77.5	67.4	31.8	98	257	265	620	197	54	0	369	228	23	0	369	228	23	0	369	351	261	25	32	197	54	0	369	351	187	21	24	11	1,637	
70 to 75	72.5	64.6	29.7	325	236	286	847	269	74	0	504	311	32	0	504	311	32	0	504	263	196	25	33	269	74	0	504	263	140	22	25	11	2,237	
65 to 70	67.5	60.9	27.0	251	204	216	671	213	59	0	399	246	25	0	399	246	25	0	399	175	131	13	17	213	59	0	399	175	93	12	13	6	1,772	
60 to 65	62.5	56.3	24.0	358	268	301	927	294	81	0	552	340	35	0	552	340	35	0	552	88	65	9	12	294	81	0	552	88	47	8	9	4	2,448	
Heating																																		
55 to 60	57.5	50.3	20.4	217	191	192	600	190	52	0	357	220	23	0	357	220	23	0	357	(807)	(311)	0	127	190	52	0	357	(807)	0	0	0		1,985	127
50 to 55	52.5	46.4	18.3	218	223	289	730	232	64	0	435	268	28	0	435	268	28	0	435	(1,106)	(593)	0	340	232	64	0	435	(1,106)	(141)	0	20		2,415	321
45 to 50	47.5	41.8	16.0	243	196	195	634	201	55	0	377	233	24	0	377	233	24	0	377	(1,404)	(875)	78	457	201	55	0	377	(1,404)	(423)	78	178		1,887	279
40 to 45	42.5	38.0	14.3	193	171	149	513	163	45	0	305	188	19	0	305	188	19	0	305	(1,703)	(1,157)	127	500	163	45	0	305	(1,703)	(706)	127	274		1,527	226
35 to 40	37.5	33.9	12.5	357	311	355	1,023	325	89	0	609	376	39	0	609	376	39	0	609	(2,002)	(1,440)	382	1,258	325	89	0	609	(2,002)	(988)	382	806		3,045	452
30 to 35	32.5	29.3	10.6	277	221	236	734	233	64	0	437	269	28	0	437	269	28	0	437	(2,301)	(1,722)	365	1,090	233	64	0	437	(2,301)	(1,270)	365	764		1,745	325
25 to 30	27.5	24.3	8.7	159	98	134	391	124	34	0	233	144	15	0	233	144	15	0	233	(2,599)	(2,004)	243	680	124	34	0	233	(2,599)	(1,553)	243	506		929	174
20 to 25	22.5	19.3	6.8	89	48	58	195	62	17	0	116	72	7	0	116	72	7	0	116	(2,898)	(2,287)	146	389	62	17	0	116	(2,898)	(1,835)	146	302		463	87
15 to 20	17.5	14.8	5.3	74	20	31	125	40	11	0	74	46	5	0	74	46	5	0	74	(3,197)	(2,569)	109	281	40	11	0	74	(3,197)	(2,117)	109	225		297	56
10 to 15	12.5	10.0	3.8	35	7	5	47	15	4	0	28	17	2	0	28	17	2	0	28	(3,496)	(2,851)	47	118	15	4	0	28	(3,496)	(2,399)	47	97		112	21
5 to 10	7.5	5.1	2.3	17	9	8	34	11	3	0	20	12	1	0	20	12	1	0	20	(3,795)	(3,133)	38	94	11	3	0	20	(3,795)	(2,682)	38	78		81	15
0 to 5	2.5	0.6	1.0	1	0	0	1	0	0	0	1	0	0	0	1	0	0	0	1	(4,093)	(3,416)	1	3	0	0	0	1	(4,093)	(2,964)	1	3		2	0
-5 to 0	(2.5)	0.0	0.0	0	0	0	0	0	0	0	0	0	0	0	0	0	0	0	0	(4,392)	(3,698)	0	0	0	0	0	0	(4,392)	(3,246)	0	0		0	0
-10 to -5	(7.5)	0.0	0.0	0	0	0	0	0	0	0	0	0	0	0	0	0	0	0	0	(4,691)	(3,980)	0	0	0	0	0	0	(4,691)	(3,529)	0	0		0	0
-15 to -10	(12.5)	0.0	0.0	0	0	0	0	0	0	0	0	0	0	0	0	0	0	0	0	(4,990)	(4,262)	0	0	0	0	0	0	(4,990)	(3,811)	0	0		0	0
-20 to -15	(17.5)	0.0	0.0	0	0	0	0	0	0	0	0	0	0	0	0	0	0	0	0	(5,289)	(4,545)	0	0	0	0	0	0	(5,289)	(4,093)	0	0		0	0
-25 to -20	(22.5)	0.0	0.0	0	0	0	0	0	0	0	0	0	0	0	0	0	0	0	0	(5,587)	(4,827)	0	0	0	0	0	0	(5,587)	(4,375)	0	0		0	0
				2,920	2,920	2,920	8,760	2,781	765	0	5,214	3,215	331	0	5,214	3,215	331	0	5,214			1,646	5,476	2,781	765	0	5,214			1,631	3,360	47	25,987	2,084

Cell Ref.	Comment
A-H	TMY-2 Weather Data for Newark, NJ
I - L	Existing Occupancy hours
M - P	Existing Heating/Cooling hours
Q - T	Existing Motor Operating Hours
U	Occupied Cooling and Heating loads (MBH)
V	Unoccupied Cooling and Heating loads (MBH)
W	Cooling = [col U] x ([col M] + [col O]) ÷ 1,000 ÷ AD45
	Heating = -MIN([col I] + [col K] , [col M] + [col O]) x MIN([col U] + internal gains , 0) + IF([col I] + [col K] > [col M]+[col O] , (([col I] + [col K]) - ([col M] + [col O])) x MIN([col V] + internal gains , 0) , 0) ÷ 1,000 ÷ AD44
X	Cooling = [col R] x ([col J] + [col L]) ÷ 1,000 ÷ AD45
	Heating = -([col N] + [col P]) x MIN([col V] + internal gains , 0) + IF([col I] + [col K] < [col M] + [col O] , (([col M] + [col O]) - ([col I] + [col K])) x MIN([col U] + internal gains , 0)) ÷ 1,000 ÷ AD44
Y ÷ AB	Proposed Operating hours
AC	Proposed Occupied Cooling and Heating Loads:
	Cooling = ([col B] - AC60) ÷ ([col B] - AC55) x [col U]
	Heating = ([col B] - AE60) ÷ ([col B] - AE55) x [col U]
AD	Proposed Unoccupied Cooling and Heating Loads:
	Cooling = ([col B] - AC61) ÷ ([col B] - AC56) x [col V]
	Heating = ([col B] - AE61) ÷ ([col B] - AE56) x [col V] ([col V] is modified to account for reduced kitchen and building ventilation due to EMS)
AE	Cooling = [col AC] x ([col Y] + [col AA]) ÷ 1,000 ÷ AD45
	Heating = -MIN([col I] + [col K] , [col Y] + [col AA]) x MIN([col AC] + internal gains , 0) + IF([col I] + [col K] > [col Y]+[col AA] , (([col I] + [col K]) - ([col Y] + [col AA])) x MIN([col AD] + internal gains , 0) , 0) ÷ 1,000 ÷ AD44
AF	Cooling = [col AD] x ([col Z] + [col AB]) ÷ 1,000 ÷ AD45
	Heating = -([col Z] + [col AB]) x MIN([col AD] + internal gains , 0) + IF([col I] + [col K] < [col Y] + [col AA] , (([col Y] + [col AA]) - ([col I] + [col K])) x MIN([col AC] + internal gains , 0)) ÷ 1,000 ÷ AD44
AG	÷ ([col W] + [col X]) - ([col AE] + [col AF])
	HVAC Fan and Pump Savings
AH	Cooling =([col Q] + [col S] + ([col R] + [col T]) x AD49) x (AD46 + AD48) - ((col Y] + [col AA] + ([col Z] + [col AB]) x AD49) x (AD46 + AD48)
	Heating =([col Q] + [col S]) x AD46 + IF(B20<35,([col R] + [col T]) x AD49 x AD46, IF(B20>50,0,([col R] + [col T]) x AD49 x AD46)) - (([col Y] + [col AA]) x AD46 + IF(B20<35,([col Z] + [col AB]) x AD49 x AD46, IF(B20>50,0,([col Z] + [col AB]) x AD49 x AD46)))
AI	÷ ([col W] + [col X]) - ([col AE] + [col AF])

Assumptions:	Value	Unit	CELL REF	Description
Occupied Area	116,894	SF	AD43	
Existing Heating Plant Efficiency	76.0%		AD44	
Existing Chiller Efficiency	3.2	COP	AD45	
Fan Power	53.2	kW	AD46	
Heating Pump Power	13.4	kW	AD47	
Cooling Pump Power	0.0	kW	AD48	
UnOcc. Fan & Pump Cycling	10.0%		AD49	% Operating Hours During UnOcc.
UnOcc. Kitchen Vent. Reduction	0.0%		AD50	% CFM Saved
UnOcc. Ventilation Reduction	0.0%		AD51	% CFM Saved

Average Existing Space Temperatures					
	Cooling		Heating		Description
Occupied	74.0	AC55	71.0	AE55	
UnOccupied	80.0	AC56	63.0	AE56	

Average Proposed Space Temperatures					
	Cooling		Heating		Description
Occupied	74.0	AC60	71.0	AE60	
UnOccupied	85.0	AC61	55.0	AE61	

Page content is subject to Confidentiality Restrictions

Project Template
George Washington-Middle School
Integrated and New Energy Management Systems

TMY-2 Weather Data for Newark, NJ								Existing Occupancy Schedule				Existing Heating/Cooling Schedule				Existing Motor Operating Schedule				Existing				Proposed							Savings		
Amb. Temp Bin deg. F	Ave Temp deg. F	M.C.W.B deg. F	M.C. Enthalpy Btu/lbma	01-08 Hours	09-16 Hours	17-24 Hours	Total Bin Hours	Occ On-Peak Hrs.	UnOcc On-Peak Hrs.	Occ Off-Peak Hrs.	UnOcc Off-Peak Hrs.	Occ On-Peak Hrs.	UnOcc On-Peak Hrs.	Occ Off-Peak Hrs.	UnOcc Off-Peak Hrs.	Occ On-Peak Hrs.	UnOcc On-Peak Hrs.	Occ Off-Peak Hrs.	UnOcc Off-Peak Hrs.	Occ. Cool/ Heat Load (MBH)	UnOcc. Cool/ Heat Load (MBH)	Occ Cooling/Heating Energy Consump. (MMBTU)	UnOcc Cooling/Heating Energy Consump. (MMBTU)	Occ On-Peak Hrs.	UnOcc On-Peak Hrs.	Occ Off-Peak Hrs.	UnOcc Off-Peak Hrs.	Occ. Cool/ Heat Load (MBH)	UnOcc. Cool/ Heat Load (MBH)	Occ Cooling/Heating Energy Consump. (MMBTU)	UnOcc Cooling/Heating Energy Consump. (MMBTU)	Cooling Energy Savings (MMBTU)	HVAC Electrical Savings (kWh)	Heating Energy Savings (MMBTU)
A	B	C	D	E	F	G	H	I	J	K	L	M	N	O	P	Q	R	S	T	U	V	W	X	Y	Z	AA	AB	AC	AD	AE	AF	AG	AH	AI
Cooling																																		
105 to 110	107.5	0.0	0.0	0	0	0	0	0	0	0	0	0	0	0	0	0	0	0	0	918	684	0	0	0	0	0	0	918	489	0	0	0	0	
100 to 105	102.5	0.0	0.0	0	0	0	0	0	0	0	0	0	0	0	0	0	0	0	0	827	616	0	0	0	0	0	0	827	440	0	0	0	0	
95 to 100	97.5	72.2	35.7	0	5	1	6	2	0	0	3	2	0	0	3	2	0	0	3	735	547	1	1	2	0	0	3	735	391	1	0	0	0	
90 to 95	92.5	73.8	37.3	0	33	7	40	16	0	1	23	16	0	1	23	16	0	1	23	643	479	3	3	16	0	1	23	643	342	3	2	1	0	
85 to 90	87.5	71.3	35.1	0	92	30	122	49	0	4	69	49	0	4	69	49	0	4	69	551	410	9	9	49	0	4	69	551	293	9	6	3	0	
80 to 85	82.5	69.2	33.2	8	330	162	500	202	0	16	282	202	0	16	282	202	0	16	282	459	342	31	30	202	0	16	282	459	244	31	21	9	1,019	
75 to 80	77.5	67.4	31.8	98	257	265	620	251	0	20	349	251	0	20	349	251	0	20	349	367	274	31	30	251	0	20	349	367	195	31	21	8	0	
70 to 75	72.5	64.6	29.7	325	236	286	847	343	0	27	477	343	0	27	477	343	0	27	477	276	205	32	30	343	0	27	477	276	147	32	22	9	0	
65 to 70	67.5	60.9	27.0	251	204	216	671	272	0	21	378	272	0	21	378	272	0	21	378	184	137	17	16	272	0	21	378	184	98	17	11	5	0	
60 to 65	62.5	56.3	24.0	358	268	301	927	375	0	29	522	375	0	29	522	375	0	29	522	92	68	12	11	375	0	29	522	92	49	12	8	3	0	
Heating																																		
55 to 60	57.5	50.3	20.4	217	191	192	600	243	0	19	338	243	0	19	338	243	0	19	338	(738)	(262)	40	85	243	0	19	338	(738)	0	40	0		0	85
50 to 55	52.5	46.4	18.3	218	223	289	730	296	0	23	411	296	0	23	411	296	0	23	411	(1,011)	(552)	158	252	296	0	23	411	(1,011)	(145)	158	43		0	209
45 to 50	47.5	41.8	16.0	243	196	195	634	257	0	20	357	257	0	20	357	257	0	20	357	(1,285)	(843)	232	349	257	0	20	357	(1,285)	(436)	232	167		0	182
40 to 45	42.5	38.0	14.3	193	171	149	513	208	0	16	289	208	0	16	289	208	0	16	289	(1,558)	(1,133)	264	387	208	0	16	289	(1,558)	(727)	264	240		0	147
35 to 40	37.5	33.9	12.5	357	311	355	1,023	414	0	32	576	414	0	32	576	414	0	32	576	(1,831)	(1,424)	679	982	414	0	32	576	(1,831)	(1,017)	679	689		0	293
30 to 35	32.5	29.3	10.6	277	221	236	734	297	0	23	414	297	0	23	414	297	0	23	414	(2,105)	(1,715)	596	855	297	0	23	414	(2,105)	(1,308)	596	644		0	210
25 to 30	27.5	24.3	8.7	159	98	134	391	158	0	12	220	158	0	12	220	158	0	12	220	(2,378)	(2,005)	376	535	158	0	12	220	(2,378)	(1,598)	376	423		0	112
20 to 25	22.5	19.3	6.8	89	48	58	195	79	0	6	110	79	0	6	110	79	0	6	110	(2,651)	(2,296)	217	307	79	0	6	110	(2,651)	(1,889)	217	251		0	56
15 to 20	17.5	14.8	5.3	74	20	31	125	51	0	4	70	51	0	4	70	51	0	4	70	(2,924)	(2,587)	157	222	51	0	4	70	(2,924)	(2,180)	157	186		0	36
10 to 15	12.5	10.0	3.8	35	7	5	47	19	0	1	26	19	0	1	26	19	0	1	26	(3,198)	(2,877)	66	93	19	0	1	26	(3,198)	(2,470)	66	80		0	13
5 to 10	7.5	5.1	2.3	17	9	8	34	14	0	1	19	14	0	1	19	14	0	1	19	(3,471)	(3,168)	53	74	14	0	1	19	(3,471)	(2,761)	53	65		0	10
0 to 5	2.5	0.6	1.0	1	0	0	1	0	0	0	1	0	0	0	1	0	0	0	1	(3,744)	(3,458)	2	2	0	0	0	1	(3,744)	(3,052)	2	2		0	0
-5 to 0	(2.5)	0.0	0.0	0	0	0	0	0	0	0	0	0	0	0	0	0	0	0	0	(4,018)	(3,749)	0	0	0	0	0	0	(4,018)	(3,342)	0	0		0	0
-10 to -5	(7.5)	0.0	0.0	0	0	0	0	0	0	0	0	0	0	0	0	0	0	0	0	(4,291)	(4,040)	0	0	0	0	0	0	(4,291)	(3,633)	0	0		0	0
-15 to -10	(12.5)	0.0	0.0	0	0	0	0	0	0	0	0	0	0	0	0	0	0	0	0	(4,564)	(4,330)	0	0	0	0	0	0	(4,564)	(3,923)	0	0		0	0
-20 to -15	(17.5)	0.0	0.0	0	0	0	0	0	0	0	0	0	0	0	0	0	0	0	0	(4,838)	(4,621)	0	0	0	0	0	0	(4,838)	(4,214)	0	0		0	0
-25 to -20	(22.5)	0.0	0.0	0	0	0	0	0	0	0	0	0	0	0	0	0	0	0	0	(5,111)	(4,911)	0	0	0	0	0	0	(5,111)	(4,505)	0	0		0	0
				2,920	2,920	2,920	8,760	3,546	0	278	4,936	3,546	0	278	4,936	3,546	0	278	4,936			2,974	4,274	3,546	0	278	4,936			2,974	2,883	37	1,019	1,353

Cell Ref.	Comment
A-H	TMY-2 Weather Data for Newark, NJ
I - L	Existing Occupancy hours
M - P	Existing Heating/Cooling hours
Q - T	Existing Motor Operating Hours
U	Occupied Cooling and Heating loads (MBH)
V	Unoccupied Cooling and Heating loads (MBH)
W	Cooling = [col U] x ([col M] + [col O]) ÷ 1,000 ÷ AD45
	Heating = -MIN([col I] + [col K] , [col M] + [col O]) x MIN([col U] + internal gains , 0) + IF([col I] + [col K] > [col M]+[col O] , (([col I] + [col K]) - ([col M] + [col O])) x MIN([col V] + internal gains , 0) , 0) ÷ 1,000 ÷ AD44
X	Cooling = [col R] x ([col J] + [col L]) ÷ 1,000 ÷ AD45
	Heating = -([col N] + [col P]) x MIN([col V] + internal gains , 0) + IF([col I] + [col K] < [col M] + [col O] , (([col M] + [col O]) - ([col I] + [col K])) x MIN([col U] + internal gains , 0)) ÷ 1,000 ÷ AD44
Y ÷ AB	Proposed Operating hours
AC	Proposed Occupied Cooling and Heating Loads:
	Cooling = ([col B] - AC60) ÷ ([col B] - AC55) x [col U]
	Heating = ([col B] - AE60) ÷ ([col B] - AE55) x [col U]
AD	Proposed Unoccupied Cooling and Heating Loads:
	Cooling = ([col B] - AC61) ÷ ([col B] - AC56) x [col V]
	Heating = ([col B] - AE61) ÷ ([col B] - AE56) x [col V] ([col V] is modified to account for reduced kitchen and building ventilation due to EMS)
AE	Cooling = [col AC] x ([col Y] + [col AA]) ÷ 1,000 ÷ AD45
	Heating = -MIN([col I] + [col K] , [col Y] + [col AA]) x MIN([col AC] + internal gains , 0) + IF([col I] + [col K] > [col Y]+[col AA] , (([col I] + [col K]) - ([col Y] + [col AA])) x MIN([col AD] + internal gains , 0) , 0) ÷ 1,000 ÷ AD44
AF	Cooling = [col AD] x ([col Z] + [col AB]) ÷ 1,000 ÷ AD45
	Heating = -([col Z] + [col AB]) x MIN([col AD] + internal gains , 0) + IF([col I] + [col K] < [col Y] + [col AA] , (([col Y] + [col AA]) - ([col I] + [col K])) x MIN([col AC] + internal gains , 0)) ÷ 1,000 ÷ AD44
AG	÷ ([col W] + [col X]) - ([col AE] + [col AF])
	HVAC Fan and Pump Savings
AH	Cooling =([col Q] + [col S] + ([col R] + [col T]) x AD49) x (AD46 + AD48) - ((col Y] + [col AA] + ([col Z] + [col AB]) x AD49) x (AD46 + AD48)
	Heating =([col Q] + [col S]) x AD46 + IF(B20<35,([col R] + [col T]) x AD49 x AD46, IF(B20>50,0,([col R] + [col T]) x AD49 x AD46)) - (([col Y] + [col AA]) x AD46 + IF(B20<35,([col Z] + [col AB]) x AD49 x AD46, IF(B20>50,0,([col Z] + [col AB]) x AD49 x AD46)))
AI	÷ ([col W] + [col X]) - ([col AE] + [col AF])

Assumptions:	Value	Unit	CELL REF	Description
Occupied Area	106,488	SF	**AD43**	
Existing Heating Plant Efficiency	80.0%		**AD44**	
Existing Chiller Efficiency	3.2	COP	**AD45**	
Fan Power	36.2	kW	**AD46**	
Heating Pump Power	11.8	kW	**AD47**	
Cooling Pump Power	0.0	kW	**AD48**	
UnOcc. Fan & Pump Cycling	10.0%		**AD49**	% Operating Hours During UnOcc.
UnOcc. Kitchen Vent. Reduction	0.0%		**AD50**	% CFM Saved
UnOcc. Ventilation Reduction	0.0%		**AD51**	% CFM Saved

Average Existing Space Temperatures					
	Cooling		Heating		Description
Occupied	74.0	**AC55**	71.0	**AE55**	
UnOccupied	80.0	**AC56**	62.0	**AE56**	

Average Proposed Space Temperatures					
	Cooling		Heating		Description
Occupied	74.0	**AC60**	71.0	**AE60**	
UnOccupied	85.0	**AC61**	55.0	**AE61**	

Page content is subject to Confidentiality Restrictions

Project Template
Wayne Hills-High School
Integrated and New Energy Management Systems

TMY-2 Weather Data for Newark, NJ								Existing Occupancy Schedule				Existing Heating/Cooling Schedule				Existing Motor Operating Schedule				Existing				Proposed								Savings		
Amb. Temp Bin deg. F	Ave Temp deg. F	M.C.W.B deg. F	M.C. Enthalpy Btu/lbma	01-08 Hours	09-16 Hours	17-24 Hours	Total Bin Hours	Occ On-Peak Hrs.	UnOcc On-Peak Hrs.	Occ Off-Peak Hrs.	UnOcc Off-Peak Hrs.	Occ On-Peak Hrs.	UnOcc On-Peak Hrs.	Occ Off-Peak Hrs.	UnOcc Off-Peak Hrs.	Occ On-Peak Hrs.	UnOcc On-Peak Hrs.	Occ Off-Peak Hrs.	UnOcc Off-Peak Hrs.	Occ. Cool/ Heat Load (MBH)	UnOcc. Cool/ Heat Load (MBH)	Occ Cooling/Heating Energy Consump. (MMBTU)	UnOcc Cooling/Heating Energy Consump. (MMBTU)	Occ On-Peak Hrs.	UnOcc On-Peak Hrs.	Occ Off-Peak Hrs.	UnOcc Off-Peak Hrs.	Occ. Cool/ Heat Load (MBH)	UnOcc. Cool/ Heat Load (MBH)	Occ Cooling/Heating Energy Consump. (MMBTU)	UnOcc Cooling/Heating Energy Consump. (MMBTU)	Cooling Energy Savings (MMBTU)	HVAC Electrical Savings (kWh)	Heating Energy Savings (MMBTU)
A	B	C	D	E	F	G	H	I	J	K	L	M	N	O	P	Q	R	S	T	U	V	W	X	Y	Z	AA	AB	AC	AD	AE	AF	AG	AH	AI
Cooling																																		
105 to 110	107.5	0.0	0.0	0	0	0	0	0	0	0	0	0	0	0	0	0	0	0	0	4,758	3,543	0	0	0	0	0	0	4,758	2,531	0	0	0	0	
100 to 105	102.5	0.0	0.0	0	0	0	0	0	0	0	0	0	0	0	0	0	0	0	0	4,282	3,189	0	0	0	0	0	0	4,282	2,278	0	0	0	0	
95 to 100	97.5	72.2	35.7	0	5	1	6	2	0	1	3	2	0	1	2	2	0	1	2	3,806	2,835	4	2	2	0	1	3	3,806	2,025	3	1	1	30	
90 to 95	92.5	73.8	37.3	0	33	7	40	16	0	6	18	16	0	8	16	16	0	8	16	3,331	2,480	22	11	16	0	6	18	3,331	1,772	20	9	4	201	
85 to 90	87.5	71.3	35.1	0	92	30	122	49	0	19	54	49	0	25	47	49	0	25	47	2,855	2,126	58	28	49	0	19	54	2,855	1,519	53	22	10	612	
80 to 85	82.5	69.2	33.2	8	330	162	500	202	0	76	222	202	0	103	194	202	0	103	194	2,379	1,772	198	94	202	0	76	222	2,379	1,265	181	77	35	4,774	
75 to 80	77.5	67.4	31.8	98	257	265	620	251	0	94	275	251	0	128	241	251	0	128	241	1,903	1,417	197	93	251	0	94	275	1,903	1,012	179	76	35	3,456	
70 to 75	72.5	64.6	29.7	325	236	286	847	343	0	129	376	343	0	175	329	343	0	175	329	1,427	1,063	202	96	343	0	129	376	1,427	759	184	78	36	4,722	
65 to 70	67.5	60.9	27.0	251	204	216	671	272	0	102	298	272	0	138	261	272	0	138	261	952	709	107	50	272	0	102	298	952	506	97	41	19	3,740	
60 to 65	62.5	56.3	24.0	358	268	301	927	375	0	141	411	375	0	191	361	375	0	191	361	476	354	74	35	375	0	141	411	476	253	67	28	13	5,168	
Heating																																		
55 to 60	57.5	50.3	20.4	217	191	192	600	243	0	91	266	243	0	124	233	243	0	124	233	(1,538)	(927)	114	306	243	0	91	266	(1,445)	0	73	0		4,716	347
50 to 55	52.5	46.4	18.3	218	223	289	730	296	0	111	324	296	0	151	284	296	0	151	284	(2,004)	(1,368)	388	562	296	0	111	324	(1,911)	(221)	338	40		5,738	572
45 to 50	47.5	41.8	16.0	243	196	195	634	257	0	96	281	257	0	131	247	257	0	131	247	(2,470)	(1,810)	554	652	257	0	96	281	(2,377)	(662)	510	198		4,485	498
40 to 45	42.5	38.0	14.3	193	171	149	513	208	0	78	227	208	0	106	200	208	0	106	200	(2,936)	(2,251)	623	661	208	0	78	227	(2,843)	(1,103)	588	292		3,629	404
35 to 40	37.5	33.9	12.5	357	311	355	1,023	414	0	155	454	414	0	211	398	414	0	211	398	(3,402)	(2,692)	1,592	1,583	414	0	155	454	(3,309)	(1,545)	1,522	846		7,236	807
30 to 35	32.5	29.3	10.6	277	221	236	734	297	0	111	325	297	0	151	285	297	0	151	285	(3,868)	(3,134)	1,392	1,326	297	0	111	325	(3,775)	(1,986)	1,342	796		3,346	580
25 to 30	27.5	24.3	8.7	159	98	134	391	158	0	59	173	158	0	81	152	158	0	81	152	(4,334)	(3,575)	875	808	158	0	59	173	(4,241)	(2,427)	849	525		1,783	310
20 to 25	22.5	19.3	6.8	89	48	58	195	79	0	30	86	79	0	40	76	79	0	40	76	(4,800)	(4,016)	503	453	79	0	30	86	(4,707)	(2,869)	490	312		889	155
15 to 20	17.5	14.8	5.3	74	20	31	125	51	0	19	55	51	0	26	49	51	0	26	49	(5,267)	(4,458)	365	323	51	0	19	55	(5,173)	(3,310)	357	232		570	99
10 to 15	12.5	10.0	3.8	35	7	5	47	19	0	7	21	19	0	10	18	19	0	10	18	(5,733)	(4,899)	153	134	19	0	7	21	(5,639)	(3,752)	150	99		214	37
5 to 10	7.5	5.1	2.3	17	9	8	34	14	0	5	15	14	0	7	13	14	0	7	13	(6,199)	(5,340)	123	106	14	0	5	15	(6,105)	(4,193)	120	81		155	27
0 to 5	2.5	0.6	1.0	1	0	0	1	0	0	0	0	0	0	0	0	0	0	0	0	(6,665)	(5,782)	4	3	0	0	0	0	(6,571)	(4,634)	4	3		5	1
-5 to 0	(2.5)	0.0	0.0	0	0	0	0	0	0	0	0	0	0	0	0	0	0	0	0	(7,131)	(6,223)	0	0	0	0	0	0	(7,038)	(5,076)	0	0		0	0
-10 to -5	(7.5)	0.0	0.0	0	0	0	0	0	0	0	0	0	0	0	0	0	0	0	0	(7,597)	(6,665)	0	0	0	0	0	0	(7,504)	(5,517)	0	0		0	0
-15 to -10	(12.5)	0.0	0.0	0	0	0	0	0	0	0	0	0	0	0	0	0	0	0	0	(8,063)	(7,106)	0	0	0	0	0	0	(7,970)	(5,958)	0	0		0	0
-20 to -15	(17.5)	0.0	0.0	0	0	0	0	0	0	0	0	0	0	0	0	0	0	0	0	(8,529)	(7,547)	0	0	0	0	0	0	(8,436)	(6,400)	0	0		0	0
-25 to -20	(22.5)	0.0	0.0	0	0	0	0	0	0	0	0	0	0	0	0	0	0	0	0	(8,995)	(7,989)	0	0	0	0	0	0	(8,902)	(6,841)	0	0		0	0
				2,920	2,920	2,920	8,760	3,546	0	1,329	3,885	3,546	0	1,807	3,407	3,546	0	1,807	3,407			7,548	7,325	3,546	0	1,329	3,885			7,128	3,755	153	55,468	3,837

Cell Ref.	Comment
A-H	TMY-2 Weather Data for Newark, NJ
I - L	Existing Occupancy hours
M - P	Existing Heating/Cooling hours
Q - T	Existing Motor Operating Hours
U	Occupied Cooling and Heating loads (MBH)
V	Unoccupied Cooling and Heating loads (MBH)
W	Cooling = [col U] x ([col M] + [col O]) ÷ 1,000 ÷ AD45
	Heating = -MIN([col I] + [col K] , [col M] + [col O]) x MIN([col U] + internal gains , 0) + IF([col I] + [col K] > [col M]+[col O] , (([col I] + [col K]) - ([col M] + [col O])) x MIN([col V] + internal gains , 0) , 0) ÷ 1,000 ÷ AD44
X	Cooling = [col R] x ([col J] + [col L]) ÷ 1,000 ÷ AD45
	Heating = -([col N] + [col P]) x MIN([col V] + internal gains , 0) + IF([col I] + [col K] < [col M] + [col O] , (([col M] + [col O]) - ([col I] + [col K])) x MIN([col U] + internal gains , 0)) ÷ 1,000 ÷ AD44
Y ÷ AB	Proposed Operating hours
AC	Proposed Occupied Cooling and Heating Loads:
	Cooling = ([col B] - AC60) ÷ ([col B] - AC55) x [col U]
	Heating = ([col B] - AE60) ÷ ([col B] - AE55) x [col U]
AD	Proposed Unoccupied Cooling and Heating Loads:
	Cooling = ([col B] - AC61) ÷ ([col B] - AC56) x [col V]
	Heating = ([col B] - AE61) ÷ ([col B] - AE56) x [col V] ([col V] is modified to account for reduced kitchen and building ventilation due to EMS)
AE	Cooling = [col AC] x ([col Y] + [col AA]) ÷ 1,000 ÷ AD45
	Heating = -MIN([col I] + [col K] , [col Y] + [col AA]) x MIN([col AC] + internal gains , 0) + IF([col I] + [col K] > [col Y]+[col AA] , (([col I] + [col K]) - ([col Y] + [col AA])) x MIN([col AD] + internal gains , 0) , 0) ÷ 1,000 ÷ AD44
AF	Cooling = [col AD] x ([col Z] + [col AB]) ÷ 1,000 ÷ AD45
	Heating = -([col Z] + [col AB]) x MIN([col AD] + internal gains , 0) + IF([col I] + [col K] < [col Y] + [col AA] , (([col Y] + [col AA]) - ([col I] + [col K])) x MIN([col AC] + internal gains , 0)) ÷ 1,000 ÷ AD44
AG	÷ ([col W] + [col X]) - ([col AE] + [col AF])
	HVAC Fan and Pump Savings
AH	Cooling =([col Q] + [col S] + ([col R] + [col T]) x AD49) x (AD46 + AD48) - (([col Y] + [col AA] + ([col Z] + [col AB]) x AD49) x (AD46 + AD48)
	Heating =([col Q] + [col S]) x AD46 + IF(B20<35,([col R] + [col T]) x AD49 x AD46, IF(B20>50,0,([col R] + [col T]) x AD49 x AD46)) - (([col Y] + [col AA]) x AD46 + IF(B20<35,([col Z] + [col AB]) x AD49 x AD46, IF(B20>50,0,([col Z] + [col AB]) x AD49 x AD46)))
AI	÷ ([col W] + [col X]) - ([col AE] + [col AF])

Assumptions:	Value	Unit	CELL REF	Description
Occupied Area	253,766	SF	AD43	
Existing Heating Plant Efficiency	76.0%		AD44	
Existing Chiller Efficiency	3.7	COP	AD45	
Fan Power	92.8	kW	AD46	
Heating Pump Power	51.2	kW	AD47	
Cooling Pump Power	9.3	kW	AD48	
UnOcc. Fan & Pump Cycling	10.0%		AD49	% Operating Hours During UnOcc.
UnOcc. Kitchen Vent. Reduction	0.0%		AD50	% CFM Saved
UnOcc. Ventilation Reduction	0.0%		AD51	% CFM Saved

Average Existing Space Temperatures					
	Cooling		Heating		Description
Occupied	74.0	AC55	74.0	AE55	
UnOccupied	80.0	AC56	68.0	AE56	

Average Proposed Space Temperatures					
	Cooling		Heating		Description
Occupied	74.0	AC60	73.0	AE60	
UnOccupied	85.0	AC61	55.0	AE61	

Page content is subject to Confidentiality Restrictions

Project Template
Wayne Valley-High School
Integrated and New Energy Management Systems

TMY-2 Weather Data for Newark, NJ								Existing Occupancy Schedule				Existing Heating/Cooling Schedule				Existing Motor Operating Schedule				Existing				Proposed							Savings		
Amb. Temp Bin deg. F	Ave Temp deg. F	M.C.W.B deg. F	M.C. Enthalpy Btu/lbma	01-08 Hours	09-16 Hours	17-24 Hours	Total Bin Hours	Occ On-Peak Hrs.	UnOcc On-Peak Hrs.	Occ Off-Peak Hrs.	UnOcc Off-Peak Hrs.	Occ On-Peak Hrs.	UnOcc On-Peak Hrs.	Occ Off-Peak Hrs.	UnOcc Off-Peak Hrs.	Occ On-Peak Hrs.	UnOcc On-Peak Hrs.	Occ Off-Peak Hrs.	UnOcc Off-Peak Hrs.	Occ. Cool/ Heat Load (MBH)	UnOcc. Cool/ Heat Load (MBH)	Occ Cooling/Heating Energy Consump. (MMBTU)	UnOcc Cooling/Heating Energy Consump. (MMBTU)	Occ On-Peak Hrs.	UnOcc On-Peak Hrs.	Occ Off-Peak Hrs.	UnOcc Off-Peak Hrs.	Occ. Cool/ Heat Load (MBH)	UnOcc. Cool/ Heat Load (MBH)	Occ Cooling/Heating Energy Consump. (MMBTU)	UnOcc Cooling/Heating Energy Consump. (MMBTU)	Cooling Energy Savings (MMBTU)	HVAC Electrical Savings (kWh)	Heating Energy Savings (MMBTU)
A	B	C	D	E	F	G	H	I	J	K	L	M	N	O	P	Q	R	S	T	U	V	W	X	Y	Z	AA	AB	AC	AD	AE	AF	AG	AH	AI
Cooling																																		
105 to 110	107.5	0.0	0.0	0	0	0	0	0	0	0	0	0	0	0	0	0	0	0	0	1,308	974	0	0	0	0	0	0	1,308	696	0	0	0	0	
100 to 105	102.5	0.0	0.0	0	0	0	0	0	0	0	0	0	0	0	0	0	0	0	0	1,178	877	0	0	0	0	0	0	1,178	626	0	0	0	0	
95 to 100	97.5	72.2	35.7	0	5	1	6	2	0	1	3	2	0	1	3	2	0	1	3	1,047	779	1	1	2	0	1	3	1,047	557	1	0	0	0	
90 to 95	92.5	73.8	37.3	0	33	7	40	16	0	3	20	16	0	3	20	16	0	3	20	916	682	5	4	16	0	3	20	916	487	5	3	1	0	
85 to 90	87.5	71.3	35.1	0	92	30	122	49	0	11	62	49	0	11	62	49	0	11	62	785	585	13	10	49	0	11	62	785	418	13	7	3	0	
80 to 85	82.5	69.2	33.2	8	330	162	500	202	0	43	254	202	0	43	254	202	0	43	254	654	487	44	34	202	0	43	254	654	348	44	24	10	2,392	
75 to 80	77.5	67.4	31.8	98	257	265	620	251	0	53	316	251	0	53	316	251	0	53	316	523	390	44	34	251	0	53	316	523	278	44	24	10	0	
70 to 75	72.5	64.6	29.7	325	236	286	847	343	0	73	431	343	0	73	431	343	0	73	431	393	292	45	34	343	0	73	431	393	209	45	25	10	0	
65 to 70	67.5	60.9	27.0	251	204	216	671	272	0	58	341	272	0	58	341	272	0	58	341	262	195	24	18	272	0	58	341	262	139	24	13	5	0	
60 to 65	62.5	56.3	24.0	358	268	301	927	375	0	80	472	375	0	80	472	375	0	80	472	131	97	16	13	375	0	80	472	131	70	16	9	4	0	
Heating																																		
55 to 60	57.5	50.3	20.4	217	191	192	600	243	0	52	305	243	0	52	305	243	0	52	305	(1,427)	0	45	0	243	0	52	305	(1,427)	0	45	0		0	0
50 to 55	52.5	46.4	18.3	218	223	289	730	296	0	63	372	296	0	63	372	296	0	63	372	(1,888)	(287)	266	74	296	0	63	372	(1,888)	(239)	266	52		0	23
45 to 50	47.5	41.8	16.0	243	196	195	634	257	0	55	323	257	0	55	323	257	0	55	323	(2,348)	(765)	415	262	257	0	55	323	(2,348)	(717)	415	243		0	20
40 to 45	42.5	38.0	14.3	193	171	149	513	208	0	44	261	208	0	44	261	208	0	44	261	(2,809)	(1,244)	484	372	208	0	44	261	(2,809)	(1,196)	484	356		0	16
35 to 40	37.5	33.9	12.5	357	311	355	1,023	414	0	88	521	414	0	88	521	414	0	88	521	(3,269)	(1,722)	1,263	1,062	414	0	88	521	(3,269)	(1,674)	1,263	1,030		0	32
30 to 35	32.5	29.3	10.6	277	221	236	734	297	0	63	374	297	0	63	374	297	0	63	374	(3,730)	(2,200)	1,119	991	297	0	63	374	(3,730)	(2,152)	1,119	968		0	23
25 to 30	27.5	24.3	8.7	159	98	134	391	158	0	34	199	158	0	34	199	158	0	34	199	(4,190)	(2,678)	709	650	158	0	34	199	(4,190)	(2,631)	709	638		0	12
20 to 25	22.5	19.3	6.8	89	48	58	195	79	0	17	99	79	0	17	99	79	0	17	99	(4,651)	(3,157)	410	385	79	0	17	99	(4,651)	(3,109)	410	379		0	6
15 to 20	17.5	14.8	5.3	74	20	31	125	51	0	11	64	51	0	11	64	51	0	11	64	(5,111)	(3,635)	299	286	51	0	11	64	(5,111)	(3,587)	299	282		0	4
10 to 15	12.5	10.0	3.8	35	7	5	47	19	0	4	24	19	0	4	24	19	0	4	24	(5,572)	(4,113)	126	122	19	0	4	24	(5,572)	(4,066)	126	121		0	1
5 to 10	7.5	5.1	2.3	17	9	8	34	14	0	3	17	14	0	3	17	14	0	3	17	(6,032)	(4,592)	101	99	14	0	3	17	(6,032)	(4,544)	101	98		0	1
0 to 5	2.5	0.6	1.0	1	0	0	1	0	0	0	1	0	0	0	1	0	0	0	1	(6,493)	(5,070)	3	3	0	0	0	1	(6,493)	(5,022)	3	3		0	0
-5 to 0	(2.5)	0.0	0.0	0	0	0	0	0	0	0	0	0	0	0	0	0	0	0	0	(6,953)	(5,548)	0	0	0	0	0	0	(6,953)	(5,500)	0	0		0	0
-10 to -5	(7.5)	0.0	0.0	0	0	0	0	0	0	0	0	0	0	0	0	0	0	0	0	(7,414)	(6,027)	0	0	0	0	0	0	(7,414)	(5,979)	0	0		0	0
-15 to -10	(12.5)	0.0	0.0	0	0	0	0	0	0	0	0	0	0	0	0	0	0	0	0	(7,874)	(6,505)	0	0	0	0	0	0	(7,874)	(6,457)	0	0		0	0
-20 to -15	(17.5)	0.0	0.0	0	0	0	0	0	0	0	0	0	0	0	0	0	0	0	0	(8,335)	(6,983)	0	0	0	0	0	0	(8,335)	(6,935)	0	0		0	0
-25 to -20	(22.5)	0.0	0.0	0	0	0	0	0	0	0	0	0	0	0	0	0	0	0	0	(8,795)	(7,461)	0	0	0	0	0	0	(8,795)	(7,414)	0	0		0	0
				2,920	2,920	2,920	8,760	3,546	0	756	4,458	3,546	0	756	4,458	3,546	0	756	4,458			5,432	4,454	3,546	0	756	4,458			5,432	4,274	42	2,392	138

Cell Ref.	Comment
A-H	TMY-2 Weather Data for Newark, NJ
I - L	Existing Occupancy hours
M - P	Existing Heating/Cooling hours
Q - T	Existing Motor Operating Hours
U	Occupied Cooling and Heating loads (MBH)
V	Unoccupied Cooling and Heating loads (MBH)
W	Cooling = [col U] x ([col M] + [col O]) ÷ 1,000 ÷ AD45
	Heating = -MIN([col I] + [col K] , [col M] + [col O]) x MIN([col U] + internal gains , 0) + IF([col I] + [col K] > [col M]+[col O] , (([col I] + [col K]) - ([col M] + [col O])) x MIN([col V] + internal gains , 0) , 0) ÷ 1,000 ÷ AD44
X	Cooling = [col R] x ([col J] + [col L]) ÷ 1,000 ÷ AD45
	Heating = -([col N] + [col P]) x MIN([col V] + internal gains , 0) + IF([col I] + [col K] < [col M] + [col O] , (([col M] + [col O]) - ([col I] + [col K])) x MIN([col U] + internal gains , 0)) ÷ 1,000 ÷ AD44
Y ÷ AB	Proposed Operating hours
AC	Proposed Occupied Cooling and Heating Loads:
	Cooling = ([col B] - AC60) ÷ ([col B] - AC55) x [col U]
	Heating = ([col B] - AE60) ÷ ([col B] - AE55) x [col U]
AD	Proposed Unoccupied Cooling and Heating Loads:
	Cooling = ([col B] - AC61) ÷ ([col B] - AC56) x [col V]
	Heating = ([col B] - AE61) ÷ ([col B] - AE56) x [col V] ([col V] is modified to account for reduced kitchen and building ventilation due to EMS)
AE	Cooling = [col AC] x ([col Y] + [col AA]) ÷ 1,000 ÷ AD45
	Heating = -MIN([col I] + [col K] , [col Y] + [col AA]) x MIN([col AC] + internal gains , 0) + IF([col I] + [col K] > [col Y]+[col AA] , (([col I] + [col K]) - ([col Y] + [col AA])) x MIN([col AD] + internal gains , 0) , 0) ÷ 1,000 ÷ AD44
AF	Cooling = [col AD] x ([col Z] + [col AB]) ÷ 1,000 ÷ AD45
	Heating = -([col Z] + [col AB]) x MIN([col AD] + internal gains , 0) + IF([col I] + [col K] < [col Y] + [col AA] , (([col Y] + [col AA]) - ([col I] + [col K])) x MIN([col AC] + internal gains , 0)) ÷ 1,000 ÷ AD44
AG	÷ ([col W] + [col X]) - ([col AE] + [col AF])
	HVAC Fan and Pump Savings
AH	Cooling =([col Q] + [col S] + ([col R] + [col T]) x AD49) x (AD46 + AD48) - ((col Y] + [col AA] + ([col Z] + [col AB]) x AD49) x (AD46 + AD48)
	Heating =([col Q] + [col S]) x AD46 + IF(B20<35,([col R] + [col T]) x AD49 x AD46, IF(B20>50,0,([col R] + [col T]) x AD49 x AD46)) - (([col Y] + [col AA]) x AD46 + IF(B20<35,([col Z] + [col AB]) x AD49 x AD46, IF(B20>50,0,([col Z] + [col AB]) x AD49 x AD46)))
AI	÷ ([col W] + [col X]) - ([col AE] + [col AF])

Assumptions:	Value	Unit	CELL REF	Description
Occupied Area	268,389	SF	**AD43**	
Existing Heating Plant Efficiency	78.0%		**AD44**	
Existing Chiller Efficiency	3.7	COP	**AD45**	
Fan Power	88.8	kW	**AD46**	
Heating Pump Power	26.1	kW	**AD47**	
Cooling Pump Power	5.2	kW	**AD48**	
UnOcc. Fan & Pump Cycling	10.0%		**AD49**	% Operating Hours During UnOcc.
UnOcc. Kitchen Vent. Reduction	0.0%		**AD50**	% CFM Saved
UnOcc. Ventilation Reduction	0.0%		**AD51**	% CFM Saved

Average Existing Space Temperatures					
	Cooling		Heating		Description
Occupied	74.0	**AC55**	73.0	**AE55**	
UnOccupied	80.0	**AC56**	55.5	**AE56**	

Average Proposed Space Temperatures					
	Cooling		Heating		Description
Occupied	74.0	**AC60**	73.0	**AE60**	
UnOccupied	85.0	**AC61**	55.0	**AE61**	

Page content is subject to Confidentiality Restrictions

Project Template
Preakness (Library Community Center)
Integrated and New Energy Management Systems

TMY-2 Weather Data for Newark, NJ								Existing Occupancy Schedule				Existing Heating/Cooling Schedule				Existing Motor Operating Schedule				Existing				Proposed								Savings		
Amb. Temp Bin deg. F	Ave Temp deg. F	M.C.W.B deg. F	M.C. Enthalpy Btu/lbma	01-08 Hours	09-16 Hours	17-24 Hours	Total Bin Hours	Occ On-Peak Hrs.	UnOcc On-Peak Hrs.	Occ Off-Peak Hrs.	UnOcc Off-Peak Hrs.	Occ On-Peak Hrs.	UnOcc On-Peak Hrs.	Occ Off-Peak Hrs.	UnOcc Off-Peak Hrs.	Occ On-Peak Hrs.	UnOcc On-Peak Hrs.	Occ Off-Peak Hrs.	UnOcc Off-Peak Hrs.	Occ. Cool/ Heat Load (MBH)	UnOcc. Cool/ Heat Load (MBH)	Occ Cooling/Heating Energy Consump. (MMBTU)	UnOcc Cooling/Heating Energy Consump. (MMBTU)	Occ On-Peak Hrs.	UnOcc On-Peak Hrs.	Occ Off-Peak Hrs.	UnOcc Off-Peak Hrs.	Occ. Cool/ Heat Load (MBH)	UnOcc. Cool/ Heat Load (MBH)	Occ Cooling/Heating Energy Consump. (MMBTU)	UnOcc Cooling/Heating Energy Consump. (MMBTU)	Cooling Energy Savings (MMBTU)	HVAC Electrical Savings (kWh)	Heating Energy Savings (MMBTU)
A	B	C	D	E	F	G	H	I	J	K	L	M	N	O	P	Q	R	S	T	U	V	W	X	Y	Z	AA	AB	AC	AD	AE	AF	AG	AH	AI
Cooling																																		
105 to 110	107.5	0.0	0.0	0	0	0	0	0	0	0	0	0	0	0	0	0	0	0	0	271	201	0	0	0	0	0	0	271	144	0	0	0	0	
100 to 105	102.5	0.0	0.0	0	0	0	0	0	0	0	0	0	0	0	0	0	0	0	0	243	181	0	0	0	0	0	0	243	130	0	0	0	0	
95 to 100	97.5	72.2	35.7	0	5	1	6	1	1	0	4	2	1	0	4	2	1	0	4	216	161	0	0	1	1	0	4	216	115	0	0	0	3	
90 to 95	92.5	73.8	37.3	0	33	7	40	9	7	0	24	11	5	0	24	11	5	0	24	189	141	1	2	9	7	0	24	189	101	1	1	1	23	
85 to 90	87.5	71.3	35.1	0	92	30	122	27	23	0	73	34	15	0	73	34	15	0	73	162	121	2	4	27	23	0	73	162	86	2	3	1	70	
80 to 85	82.5	69.2	33.2	8	330	162	500	110	92	0	298	140	63	0	298	140	63	0	298	135	101	7	14	110	92	0	298	135	72	6	11	5	705	
75 to 80	77.5	67.4	31.8	98	257	265	620	137	114	0	369	173	78	0	369	173	78	0	369	108	81	7	14	137	114	0	369	108	58	6	11	5	396	
70 to 75	72.5	64.6	29.7	325	236	286	847	187	156	0	504	237	106	0	504	237	106	0	504	81	60	7	14	187	156	0	504	81	43	6	11	5	541	
65 to 70	67.5	60.9	27.0	251	204	216	671	148	124	0	399	188	84	0	399	188	84	0	399	54	40	4	7	148	124	0	399	54	29	3	6	2	428	
60 to 65	62.5	56.3	24.0	358	268	301	927	204	171	0	552	259	116	0	552	259	116	0	552	27	20	3	5	204	171	0	552	27	14	2	4	2	592	
Heating																																		
55 to 60	57.5	50.3	20.4	217	191	192	600	132	111	0	357	168	75	0	357	168	75	0	357	(252)	(130)	12	74	132	111	0	357	(252)	0	12	0		549	74
50 to 55	52.5	46.4	18.3	218	223	289	730	161	135	0	435	204	91	0	435	204	91	0	435	(331)	(217)	31	155	161	135	0	435	(331)	(43)	31	19		669	137
45 to 50	47.5	41.8	16.0	243	196	195	634	140	117	0	377	177	79	0	377	177	79	0	377	(410)	(304)	41	191	140	117	0	377	(410)	(130)	41	73		523	118
40 to 45	42.5	38.0	14.3	193	171	149	513	113	95	0	305	144	64	0	305	144	64	0	305	(489)	(391)	45	200	113	95	0	305	(489)	(217)	45	104		423	95
35 to 40	37.5	33.9	12.5	357	311	355	1,023	225	189	0	609	286	128	0	609	286	128	0	609	(568)	(477)	113	489	225	189	0	609	(568)	(304)	113	299		843	189
30 to 35	32.5	29.3	10.6	277	221	236	734	162	135	0	437	205	92	0	437	205	92	0	437	(646)	(564)	98	416	162	135	0	437	(646)	(391)	98	280		422	135
25 to 30	27.5	24.3	8.7	159	98	134	391	86	72	0	233	109	49	0	233	109	49	0	233	(725)	(651)	61	256	86	72	0	233	(725)	(477)	61	184		225	72
20 to 25	22.5	19.3	6.8	89	48	58	195	43	36	0	116	55	24	0	116	55	24	0	116	(804)	(738)	35	145	43	36	0	116	(804)	(564)	35	109		112	36
15 to 20	17.5	14.8	5.3	74	20	31	125	28	23	0	74	35	16	0	74	35	16	0	74	(883)	(825)	25	104	28	23	0	74	(883)	(651)	25	81		72	23
10 to 15	12.5	10.0	3.8	35	7	5	47	10	9	0	28	13	6	0	28	13	6	0	28	(962)	(911)	11	43	10	9	0	28	(962)	(738)	11	35		27	9
5 to 10	7.5	5.1	2.3	17	9	8	34	7	6	0	20	10	4	0	20	10	4	0	20	(1,041)	(998)	8	34	7	6	0	20	(1,041)	(825)	8	28		20	6
0 to 5	2.5	0.6	1.0	1	0	0	1	0	0	0	1	0	0	0	1	0	0	0	1	(1,119)	(1,085)	0	1	0	0	0	1	(1,119)	(911)	0	1		1	0
-5 to 0	(2.5)	0.0	0.0	0	0	0	0	0	0	0	0	0	0	0	0	0	0	0	0	(1,198)	(1,172)	0	0	0	0	0	0	(1,198)	(998)	0	0		0	0
-10 to -5	(7.5)	0.0	0.0	0	0	0	0	0	0	0	0	0	0	0	0	0	0	0	0	(1,277)	(1,259)	0	0	0	0	0	0	(1,277)	(1,085)	0	0		0	0
-15 to -10	(12.5)	0.0	0.0	0	0	0	0	0	0	0	0	0	0	0	0	0	0	0	0	(1,356)	(1,345)	0	0	0	0	0	0	(1,356)	(1,172)	0	0		0	0
-20 to -15	(17.5)	0.0	0.0	0	0	0	0	0	0	0	0	0	0	0	0	0	0	0	0	(1,435)	(1,432)	0	0	0	0	0	0	(1,435)	(1,259)	0	0		0	0
-25 to -20	(22.5)	0.0	0.0	0	0	0	0	0	0	0	0	0	0	0	0	0	0	0	0	(1,514)	(1,519)	0	0	0	0	0	0	(1,514)	(1,345)	0	0		0	0
				2,920	2,920	2,920	8,760	1,929	1,617	0	5,214	2,451	1,095	0	5,214	2,451	1,095	0	5,214			512	2,168	1,929	1,617	0	5,214			505	1,259	20	6,641	895

Cell Ref.	Comment
A-H	TMY-2 Weather Data for Newark, NJ
I - L	Existing Occupancy hours
M - P	Existing Heating/Cooling hours
Q - T	Existing Motor Operating Hours
U	Occupied Cooling and Heating loads (MBH)
V	Unoccupied Cooling and Heating loads (MBH)
W	Cooling = [col U] x ([col M] + [col O]) ÷ 1,000 ÷ AD45
	Heating = -MIN([col I] + [col K] , [col M] + [col O]) x MIN([col U] + internal gains , 0) + IF([col I] + [col K] > [col M]+[col O] , (([col I] + [col K]) - ([col M] + [col O])) x MIN([col V] + internal gains , 0) , 0) ÷ 1,000 ÷ AD44
X	Cooling = [col R] x ([col J] + [col L]) ÷ 1,000 ÷ AD45
	Heating = -([col N] + [col P]) x MIN([col V] + internal gains , 0) + IF([col I] + [col K] < [col M] + [col O] , (([col M] + [col O]) - ([col I] + [col K])) x MIN([col U] + internal gains , 0)) ÷ 1,000 ÷ AD44
Y ÷ AB	Proposed Operating hours
AC	Proposed Occupied Cooling and Heating Loads:
	Cooling = ([col B] - AC60) ÷ ([col B] - AC55) x [col U]
	Heating = ([col B] - AE60) ÷ ([col B] - AE55) x [col U]
AD	Proposed Unoccupied Cooling and Heating Loads:
	Cooling = ([col B] - AC61) ÷ ([col B] - AC56) x [col V]
	Heating = ([col B] - AE61) ÷ ([col B] - AE56) x [col V] ([col V] is modified to account for reduced kitchen and building ventilation due to EMS)
AE	Cooling = [col AC] x ([col Y] + [col AA]) ÷ 1,000 ÷ AD45
	Heating = -MIN([col I] + [col K] , [col Y] + [col AA]) x MIN([col AC] + internal gains , 0) + IF([col I] + [col K] > [col Y]+[col AA] , (([col I] + [col K]) - ([col Y] + [col AA])) x MIN([col AD] + internal gains , 0) , 0) ÷ 1,000 ÷ AD44
AF	Cooling = [col AD] x ([col Z] + [col AB]) ÷ 1,000 ÷ AD45
	Heating = -([col Z] + [col AB]) x MIN([col AD] + internal gains , 0) + IF([col I] + [col K] < [col Y] + [col AA] , (([col Y] + [col AA]) - ([col I] + [col K])) x MIN([col AC] + internal gains , 0)) ÷ 1,000 ÷ AD44
AG	÷ ([col W] + [col X]) - ([col AE] + [col AF])
	HVAC Fan and Pump Savings
AH	Cooling =([col Q] + [col S] + ([col R] + [col T]) x AD49) x (AD46 + AD48) - ((col Y] + [col AA] + ([col Z] + [col AB]) x AD49) x (AD46 + AD48)
	Heating =([col Q] + [col S]) x AD46 + IF(B20<35,([col R] + [col T]) x AD49 x AD46, IF(B20>50,0,([col R] + [col T]) x AD49 x AD46)) - (([col Y] + [col AA]) x AD46 + IF(B20<35,([col Z] + [col AB]) x AD49 x AD46, IF(B20>50,0,([col Z] + [col AB]) x AD49 x AD46)))
AI	÷ ([col W] + [col X]) - ([col AE] + [col AF])

Assumptions:	Value	Unit	CELL REF	Description
Occupied Area	37,861	SF	**AD43**	
Existing Heating Plant Efficiency	76.0%		**AD44**	
Existing Chiller Efficiency	2.6	COP	**AD45**	
Fan Power	10.7	kW	**AD46**	
Heating Pump Power	4.7	kW	**AD47**	
Cooling Pump Power	0.0	kW	**AD48**	
UnOcc. Fan & Pump Cycling	10.0%		**AD49**	% Operating Hours During UnOcc.
UnOcc. Kitchen Vent. Reduction	0.0%		**AD50**	% CFM Saved
UnOcc. Ventilation Reduction	0.0%		**AD51**	% CFM Saved

Average Existing Space Temperatures					
	Cooling		Heating		Description
Occupied	74.0	**AC55**	73.5	**AE55**	
UnOccupied	80.0	**AC56**	65.0	**AE56**	

Average Proposed Space Temperatures					
	Cooling		Heating		Description
Occupied	74.0	**AC60**	73.5	**AE60**	
UnOccupied	85.0	**AC61**	55.0	**AE61**	

Page content is subject to Confidentiality Restrictions

Project Template
Board of Ed Administration
Integrated and New Energy Management Systems

TMY-2 Weather Data for Newark, NJ								Existing Occupancy Schedule				Existing Heating/Cooling Schedule				Existing Motor Operating Schedule				Existing				Proposed								Savings		
Amb. Temp Bin deg. F	Ave Temp deg. F	M.C.W.B deg. F	M.C. Enthalpy Btu/lbma	01-08 Hours	09-16 Hours	17-24 Hours	Total Bin Hours	Occ On-Peak Hrs.	UnOcc On-Peak Hrs.	Occ Off-Peak Hrs.	UnOcc Off-Peak Hrs.	Occ On-Peak Hrs.	UnOcc On-Peak Hrs.	Occ Off-Peak Hrs.	UnOcc Off-Peak Hrs.	Occ On-Peak Hrs.	UnOcc On-Peak Hrs.	Occ Off-Peak Hrs.	UnOcc Off-Peak Hrs.	Occ. Cool/ Heat Load (MBH)	UnOcc. Cool/ Heat Load (MBH)	Occ Cooling/Heating Energy Consump. (MMBTU)	UnOcc Cooling/Heating Energy Consump. (MMBTU)	Occ On-Peak Hrs.	UnOcc On-Peak Hrs.	Occ Off-Peak Hrs.	UnOcc Off-Peak Hrs.	Occ. Cool/ Heat Load (MBH)	UnOcc. Cool/ Heat Load (MBH)	Occ Cooling/Heating Energy Consump. (MMBTU)	UnOcc Cooling/Heating Energy Consump. (MMBTU)	Cooling Energy Savings (MMBTU)	HVAC Electrical Savings (kWh)	Heating Energy Savings (MMBTU)
A	B	C	D	E	F	G	H	I	J	K	L	M	N	O	P	Q	R	S	T	U	V	W	X	Y	Z	AA	AB	AC	AD	AE	AF	AG	AH	AI
Cooling																																		
105 to 110	107.5	0.0	0.0	0	0	0	0	0	0	0	0	0	0	0	0	0	0	0	0	1,135	1,046	0	0	0	0	0	0	1,135	557	0	0	0	0	
100 to 105	102.5	0.0	0.0	0	0	0	0	0	0	0	0	0	0	0	0	0	0	0	0	1,022	942	0	0	0	0	0	0	1,022	501	0	0	0	0	
95 to 100	97.5	72.2	35.7	0	5	1	6	2	0	0	4	2	0	0	3	2	0	0	3	908	837	1	1	2	0	0	4	908	445	1	1	1	5	
90 to 95	92.5	73.8	37.3	0	33	7	40	16	0	0	24	16	0	3	21	16	0	3	21	795	732	6	6	16	0	0	24	795	390	5	3	3	34	
85 to 90	87.5	71.3	35.1	0	92	30	122	49	0	1	72	49	0	8	65	49	0	8	65	681	628	15	15	49	0	1	72	681	334	13	9	8	104	
80 to 85	82.5	69.2	33.2	8	330	162	500	202	0	3	295	202	0	33	265	202	0	33	265	568	523	51	53	202	0	3	295	568	278	44	31	28	894	
75 to 80	77.5	67.4	31.8	98	257	265	620	251	0	4	365	251	0	41	328	251	0	41	328	454	418	50	52	251	0	4	365	454	223	44	31	28	1,108	
70 to 75	72.5	64.6	29.7	325	236	286	847	343	0	5	499	343	0	55	449	343	0	55	449	341	314	51	53	343	0	5	499	341	167	45	32	28	801	
65 to 70	67.5	60.9	27.0	251	204	216	671	272	0	4	395	272	0	44	355	272	0	44	355	227	209	27	28	272	0	4	395	227	111	24	17	15	635	
60 to 65	62.5	56.3	24.0	358	268	301	927	375	0	5	546	375	0	61	491	375	0	61	491	114	105	19	19	375	0	5	546	114	56	16	12	10	877	
Heating																																		
55 to 60	57.5	50.3	20.4	217	191	192	600	243	0	4	354	243	0	39	318	243	0	39	318	(163)	(26)	0	10	243	0	4	354	(144)	0	0	0		459	10
50 to 55	52.5	46.4	18.3	218	223	289	730	296	0	4	430	296	0	48	387	296	0	48	387	(213)	(77)	12	41	296	0	4	430	(193)	(26)	4	4		559	45
45 to 50	47.5	41.8	16.0	243	196	195	634	257	0	4	374	257	0	41	336	257	0	41	336	(262)	(129)	28	61	257	0	4	374	(242)	(77)	21	29		437	39
40 to 45	42.5	38.0	14.3	193	171	149	513	208	0	3	302	208	0	34	272	208	0	34	272	(312)	(180)	36	70	208	0	3	302	(292)	(129)	31	44		353	31
35 to 40	37.5	33.9	12.5	357	311	355	1,023	414	0	6	603	414	0	67	542	414	0	67	542	(361)	(232)	99	180	414	0	6	603	(341)	(180)	88	128		705	62
30 to 35	32.5	29.3	10.6	277	221	236	734	297	0	4	433	297	0	48	389	297	0	48	389	(411)	(283)	91	158	297	0	4	433	(391)	(232)	83	121		384	44
25 to 30	27.5	24.3	8.7	159	98	134	391	158	0	2	230	158	0	26	207	158	0	26	207	(460)	(334)	59	100	158	0	2	230	(440)	(283)	55	80		204	24
20 to 25	22.5	19.3	6.8	89	48	58	195	79	0	1	115	79	0	13	103	79	0	13	103	(510)	(386)	35	57	79	0	1	115	(490)	(334)	32	48		102	12
15 to 20	17.5	14.8	5.3	74	20	31	125	51	0	1	74	51	0	8	66	51	0	8	66	(559)	(437)	25	42	51	0	1	74	(539)	(386)	24	36		65	8
10 to 15	12.5	10.0	3.8	35	7	5	47	19	0	0	28	19	0	3	25	19	0	3	25	(609)	(489)	11	18	19	0	0	28	(589)	(437)	10	15		25	3
5 to 10	7.5	5.1	2.3	17	9	8	34	14	0	0	20	14	0	2	18	14	0	2	18	(658)	(540)	9	14	14	0	0	20	(638)	(489)	8	12		18	2
0 to 5	2.5	0.6	1.0	1	0	0	1	0	0	0	1	0	0	0	1	0	0	0	1	(708)	(592)	0	0	0	0	0	1	(688)	(540)	0	0		1	0
-5 to 0	(2.5)	0.0	0.0	0	0	0	0	0	0	0	0	0	0	0	0	0	0	0	0	(757)	(643)	0	0	0	0	0	0	(737)	(592)	0	0		0	0
-10 to -5	(7.5)	0.0	0.0	0	0	0	0	0	0	0	0	0	0	0	0	0	0	0	0	(807)	(695)	0	0	0	0	0	0	(787)	(643)	0	0		0	0
-15 to -10	(12.5)	0.0	0.0	0	0	0	0	0	0	0	0	0	0	0	0	0	0	0	0	(856)	(746)	0	0	0	0	0	0	(836)	(695)	0	0		0	0
-20 to -15	(17.5)	0.0	0.0	0	0	0	0	0	0	0	0	0	0	0	0	0	0	0	0	(906)	(798)	0	0	0	0	0	0	(886)	(746)	0	0		0	0
-25 to -20	(22.5)	0.0	0.0	0	0	0	0	0	0	0	0	0	0	0	0	0	0	0	0	(955)	(849)	0	0	0	0	0	0	(935)	(798)	0	0		0	0
				2,920	2,920	2,920	8,760	3,546	0	52	5,162	3,546	0	573	4,641	3,546	0	573	4,641			624	979	3,546	0	52	5,162			549	654	121	7,768	279

Cell Ref.	Comment
A-H	TMY-2 Weather Data for Newark, NJ
I - L	Existing Occupancy hours
M - P	Existing Heating/Cooling hours
Q - T	Existing Motor Operating Hours
U	Occupied Cooling and Heating loads (MBH)
V	Unoccupied Cooling and Heating loads (MBH)
W	Cooling = [col U] x ([col M] + [col O]) ÷ 1,000 ÷ AD45
	Heating = -MIN([col I] + [col K] , [col M] + [col O]) x MIN([col U] + internal gains , 0) + IF([col I] + [col K] > [col M]+[col O] , (([col I] + [col K]) - ([col M] + [col O])) x MIN([col V] + internal gains , 0) , 0) ÷ 1,000 ÷ AD44
X	Cooling = [col R] x ([col J] + [col L]) ÷ 1,000 ÷ AD45
	Heating = -([col N] + [col P]) x MIN([col V] + internal gains , 0) + IF([col I] + [col K] < [col M] + [col O] , (([col M] + [col O]) - ([col I] + [col K])) x MIN([col U] + internal gains , 0)) ÷ 1,000 ÷ AD44
Y ÷ AB	Proposed Operating hours
AC	Proposed Occupied Cooling and Heating Loads:
	Cooling = ([col B] - AC60) ÷ ([col B] - AC55) x [col U]
	Heating = ([col B] - AE60) ÷ ([col B] - AE55) x [col U]
AD	Proposed Unoccupied Cooling and Heating Loads:
	Cooling = ([col B] - AC61) ÷ ([col B] - AC56) x [col V]
	Heating = ([col B] - AE61) ÷ ([col B] - AE56) x [col V] ([col V] is modified to account for reduced kitchen and building ventilation due to EMS)
AE	Cooling = [col AC] x ([col Y] + [col AA]) ÷ 1,000 ÷ AD45
	Heating = -MIN([col I] + [col K] , [col Y] + [col AA]) x MIN([col AC] + internal gains , 0) + IF([col I] + [col K] > [col Y]+[col AA] , (([col I] + [col K]) - ([col Y] + [col AA])) x MIN([col AD] + internal gains , 0) , 0) ÷ 1,000 ÷ AD44
AF	Cooling = [col AD] x ([col Z] + [col AB]) ÷ 1,000 ÷ AD45
	Heating = -([col Z] + [col AB]) x MIN([col AD] + internal gains , 0) + IF([col I] + [col K] < [col Y] + [col AA] , (([col Y] + [col AA]) - ([col I] + [col K])) x MIN([col AC] + internal gains , 0)) ÷ 1,000 ÷ AD44
AG	÷ ([col W] + [col X]) - ([col AE] + [col AF])
	HVAC Fan and Pump Savings
AH	Cooling =([col Q] + [col S] + ([col R] + [col T]) x AD49) x (AD46 + AD48) - ((col Y] + [col AA] + ([col Z] + [col AB]) x AD49) x (AD46 + AD48)
	Heating =([col Q] + [col S]) x AD46 + IF(B20<35,([col R] + [col T]) x AD49 x AD46, IF(B20>50,0,([col R] + [col T]) x AD49 x AD46)) - (([col Y] + [col AA]) x AD46 + IF(B20<35,([col Z] + [col AB]) x AD49 x AD46, IF(B20>50,0,([col Z] + [col AB]) x AD49 x AD46)))
AI	÷ ([col W] + [col X]) - ([col AE] + [col AF])

Assumptions:	Value	Unit	CELL REF	Description
Occupied Area	18,921	SF	AD43	
Existing Heating Plant Efficiency	76.0%		AD44	
Existing Chiller Efficiency	2.6	COP	AD45	
Fan Power	9.8	kW	AD46	
Heating Pump Power	3.1	kW	AD47	
Cooling Pump Power	6.1	kW	AD48	
UnOcc. Fan & Pump Cycling	10.0%		AD49	% Operating Hours During UnOcc.
UnOcc. Kitchen Vent. Reduction	0.0%		AD50	% CFM Saved
UnOcc. Ventilation Reduction	0.0%		AD51	% CFM Saved

Average Existing Space Temperatures					
	Cooling		Heating		Description
Occupied	72.0	AC55	74.0	AE55	
UnOccupied	74.0	AC56	60.0	AE56	

Average Proposed Space Temperatures					
	Cooling		Heating		Description
Occupied	72.0	AC60	72.0	AE60	
UnOccupied	85.0	AC61	55.0	AE61	

Page content is subject to Confidentiality Restrictions

Project Template
Lafayette-Elementary School Modulars
Integrated and New Energy Management Systems

TMY-2 Weather Data for Newark, NJ								Existing Occupancy Schedule				Existing Heating/Cooling Schedule				Existing Motor Operating Schedule				Existing				Proposed							Savings		
Amb. Temp Bin deg. F	Ave Temp deg. F	M.C.W.B deg. F	M.C. Enthalpy Btu/lbma	01-08 Hours	09-16 Hours	17-24 Hours	Total Bin Hours	Occ On-Peak Hrs.	UnOcc On-Peak Hrs.	Occ Off-Peak Hrs.	UnOcc Off-Peak Hrs.	Occ On-Peak Hrs.	UnOcc On-Peak Hrs.	Occ Off-Peak Hrs.	UnOcc Off-Peak Hrs.	Occ On-Peak Hrs.	UnOcc On-Peak Hrs.	Occ Off-Peak Hrs.	UnOcc Off-Peak Hrs.	Occ. Cool/ Heat Load (MBH)	UnOcc. Cool/ Heat Load (MBH)	Occ Cooling/Heating Energy Consump. (MMBTU)	UnOcc Cooling/Heating Energy Consump. (MMBTU)	Occ On-Peak Hrs.	UnOcc On-Peak Hrs.	Occ Off-Peak Hrs.	UnOcc Off-Peak Hrs.	Occ. Cool/ Heat Load (MBH)	UnOcc. Cool/ Heat Load (MBH)	Occ Cooling/Heating Energy Consump. (MMBTU)	UnOcc Cooling/Heating Energy Consump. (MMBTU)	Cooling Energy Savings (MMBTU)	HVAC Electrical Savings (kWh)	Heating Energy Savings (MMBTU)
A	B	C	D	E	F	G	H	I	J	K	L	M	N	O	P	Q	R	S	T	U	V	W	X	Y	Z	AA	AB	AC	AD	AE	AF	AG	AH	AI
Cooling																																		
105 to 110	107.5	0.0	0.0	0	0	0	0	0	0	0	0	0	0	0	0	0	0	0	0	79	66	0	0	0	0	0	0	79	60	0	0	0	0	
100 to 105	102.5	0.0	0.0	0	0	0	0	0	0	0	0	0	0	0	0	0	0	0	0	71	60	0	0	0	0	0	0	71	54	0	0	0	0	
95 to 100	97.5	72.2	35.7	0	5	1	6	1	1	0	4	2	1	0	4	2	1	0	4	63	53	0	0	1	1	0	4	63	48	0	0	0	0	
90 to 95	92.5	73.8	37.3	0	33	7	40	8	8	0	24	11	5	0	24	11	5	0	24	55	46	0	0	8	8	0	24	55	42	0	0	0	1	
85 to 90	87.5	71.3	35.1	0	92	30	122	25	25	0	73	33	17	0	73	33	17	0	73	47	40	1	1	25	25	0	73	47	36	0	1	0	3	
80 to 85	82.5	69.2	33.2	8	330	162	500	100	102	0	298	134	68	0	298	134	68	0	298	39	33	2	4	100	102	0	298	39	30	1	4	0	14	
75 to 80	77.5	67.4	31.8	98	257	265	620	125	126	0	369	166	85	0	369	166	85	0	369	32	27	2	4	125	126	0	369	32	24	1	4	0	69	
70 to 75	72.5	64.6	29.7	325	236	286	847	170	173	0	504	227	116	0	504	227	116	0	504	24	20	2	4	170	173	0	504	24	18	1	4	0	29	
65 to 70	67.5	60.9	27.0	251	204	216	671	135	137	0	399	180	92	0	399	180	92	0	399	16	13	1	2	135	137	0	399	16	12	1	2	0	23	
60 to 65	62.5	56.3	24.0	358	268	301	927	186	189	0	552	248	127	0	552	248	127	0	552	8	7	1	2	186	189	0	552	8	6	1	2	0	32	
Heating																																		
55 to 60	57.5	50.3	20.4	217	191	192	600	121	122	0	357	161	82	0	357	161	82	0	357	(14)	(7)	2	4	121	122	0	357	(14)	0	2	0		21	4
50 to 55	52.5	46.4	18.3	218	223	289	730	147	149	0	435	196	100	0	435	196	100	0	435	(18)	(10)	3	6	147	149	0	435	(18)	(2)	3	1		25	6
45 to 50	47.5	41.8	16.0	243	196	195	634	127	129	0	377	170	87	0	377	170	87	0	377	(23)	(14)	3	7	127	129	0	377	(23)	(5)	3	3		18	5
40 to 45	42.5	38.0	14.3	193	171	149	513	103	105	0	305	137	70	0	305	137	70	0	305	(28)	(17)	3	7	103	105	0	305	(28)	(8)	3	3		14	4
35 to 40	37.5	33.9	12.5	357	311	355	1,023	206	209	0	609	274	140	0	609	274	140	0	609	(32)	(20)	7	18	206	209	0	609	(32)	(12)	7	10		28	8
30 to 35	32.5	29.3	10.6	277	221	236	734	147	150	0	437	197	101	0	437	197	101	0	437	(37)	(23)	6	15	147	150	0	437	(37)	(15)	6	9		20	6
25 to 30	27.5	24.3	8.7	159	98	134	391	79	80	0	233	105	54	0	233	105	54	0	233	(42)	(27)	3	9	79	80	0	233	(42)	(18)	3	6		11	3
20 to 25	22.5	19.3	6.8	89	48	58	195	39	40	0	116	52	27	0	116	52	27	0	116	(47)	(30)	2	5	39	40	0	116	(47)	(21)	2	3		5	2
15 to 20	17.5	14.8	5.3	74	20	31	125	25	25	0	74	33	17	0	74	33	17	0	74	(51)	(33)	1	4	25	25	0	74	(51)	(25)	1	3		3	1
10 to 15	12.5	10.0	3.8	35	7	5	47	9	10	0	28	13	6	0	28	13	6	0	28	(56)	(37)	1	1	9	10	0	28	(56)	(28)	1	1		1	0
5 to 10	7.5	5.1	2.3	17	9	8	34	7	7	0	20	9	5	0	20	9	5	0	20	(61)	(40)	0	1	7	7	0	20	(61)	(31)	0	1		1	0
0 to 5	2.5	0.6	1.0	1	0	0	1	0	0	0	1	0	0	0	1	0	0	0	1	(65)	(43)	0	0	0	0	0	1	(65)	(35)	0	0		0	0
-5 to 0	(2.5)	0.0	0.0	0	0	0	0	0	0	0	0	0	0	0	0	0	0	0	0	(70)	(46)	0	0	0	0	0	0	(70)	(38)	0	0		0	0
-10 to -5	(7.5)	0.0	0.0	0	0	0	0	0	0	0	0	0	0	0	0	0	0	0	0	(75)	(50)	0	0	0	0	0	0	(75)	(41)	0	0		0	0
-15 to -10	(12.5)	0.0	0.0	0	0	0	0	0	0	0	0	0	0	0	0	0	0	0	0	(80)	(53)	0	0	0	0	0	0	(80)	(44)	0	0		0	0
-20 to -15	(17.5)	0.0	0.0	0	0	0	0	0	0	0	0	0	0	0	0	0	0	0	0	(84)	(56)	0	0	0	0	0	0	(84)	(48)	0	0		0	0
-25 to -20	(22.5)	0.0	0.0	0	0	0	0	0	0	0	0	0	0	0	0	0	0	0	0	(89)	(60)	0	0	0	0	0	0	(89)	(51)	0	0		0	0
				2,920	2,920	2,920	8,760	1,760	1,786	0	5,214	2,346	1,200	0	5,214	2,346	1,200	0	5,214			37	95	1,760	1,786	0	5,214			36	57	2	322	38

Cell Ref.	Comment
A-H	TMY-2 Weather Data for Newark, NJ
I - L	Existing Occupancy hours
M - P	Existing Heating/Cooling hours
Q - T	Existing Motor Operating Hours
U	Occupied Cooling and Heating loads (MBH)
V	Unoccupied Cooling and Heating loads (MBH)
W	Cooling = [col U] x ([col M] + [col O]) ÷ 1,000 ÷ AD45
	Heating = -MIN([col I] + [col K] , [col M] + [col O]) x MIN([col U] + internal gains , 0) + IF([col I] + [col K] > [col M]+[col O] , (([col I] + [col K]) - ([col M] + [col O])) x MIN([col V] + internal gains , 0) , 0) ÷ 1,000 ÷ AD44
X	Cooling = [col R] x ([col J] + [col L]) ÷ 1,000 ÷ AD45
	Heating = -([col N] + [col P]) x MIN([col V] + internal gains , 0) + IF([col I] + [col K] < [col M] + [col O] , (([col M] + [col O]) - ([col I] + [col K])) x MIN([col U] + internal gains , 0)) ÷ 1,000 ÷ AD44
Y ÷ AB	Proposed Operating hours
AC	Proposed Occupied Cooling and Heating Loads:
	Cooling = ([col B] - AC60) ÷ ([col B] - AC55) x [col U]
	Heating = ([col B] - AE60) ÷ ([col B] - AE55) x [col U]
AD	Proposed Unoccupied Cooling and Heating Loads:
	Cooling = ([col B] - AC61) ÷ ([col B] - AC56) x [col V]
	Heating = ([col B] - AE61) ÷ ([col B] - AE56) x [col V] ([col V] is modified to account for reduced kitchen and building ventilation due to EMS)
AE	Cooling = [col AC] x ([col Y] + [col AA]) ÷ 1,000 ÷ AD45
	Heating = -MIN([col I] + [col K] , [col Y] + [col AA]) x MIN([col AC] + internal gains , 0) + IF([col I] + [col K] > [col Y]+[col AA] , (([col I] + [col K]) - ([col Y] + [col AA])) x MIN([col AD] + internal gains , 0) , 0) ÷ 1,000 ÷ AD44
AF	Cooling = [col AD] x ([col Z] + [col AB]) ÷ 1,000 ÷ AD45
	Heating = -([col Z] + [col AB]) x MIN([col AD] + internal gains , 0) + IF([col I] + [col K] < [col Y] + [col AA] , (([col Y] + [col AA]) - ([col I] + [col K])) x MIN([col AC] + internal gains , 0)) ÷ 1,000 ÷ AD44
AG	= ([col W] + [col X]) - ([col AE] + [col AF])
	HVAC Fan and Pump Savings
AH	Cooling =([col Q] + [col S] + ([col R] + [col T]) x AD49) x (AD46 + AD48) - ([col Y] + [col AA] + ([col Z] + [col AB]) x AD49) x (AD46 + AD48)
	Heating =([col Q] + [col S]) x AD46 + IF(B20<35,([col R] + [col T]) x AD49 x AD46, IF(B20>50,0,([col R] + [col T]) x AD49 x AD46)) - (([col Y] + [col AA]) x AD46 + IF(B20<35,([col Z] + [col AB]) x AD49 x AD46, IF(B20>50,0,([col Z] + [col AB]) x AD49 x AD46)))
AI	= ([col W] + [col X]) - ([col AE] + [col AF])

Assumptions:	Value	Unit	CELL REF	Description
Occupied Area	2,100	SF	**AD43**	
Existing Heating Plant Efficiency	98.0%		**AD44**	
Existing Chiller Efficiency	2.9	COP	**AD45**	
Fan Power	0.5	kW	**AD46**	
Heating Pump Power	0.0	kW	**AD47**	
Cooling Pump Power	0.0	kW	**AD48**	
UnOcc. Fan & Pump Cycling	20.0%		**AD49**	% Operating Hours During UnOcc.
UnOcc. Kitchen Vent. Reduction	0.0%		**AD50**	% CFM Saved
UnOcc. Ventilation Reduction	0.0%		**AD51**	% CFM Saved

Average Existing Space Temperatures					
	Cooling		Heating		Description
Occupied	72.0	**AC55**	72.0	**AE55**	
UnOccupied	76.0	**AC56**	68.0	**AE56**	

Average Proposed Space Temperatures					
	Cooling		Heating		Description
Occupied	72.0	**AC60**	72.0	**AE60**	
UnOccupied	78.0	**AC61**	55.0	**AE61**	

Page content is subject to Confidentiality Restrictions

Project Template
Pines Lake-Elementary School
Integrated and New Energy Management Systems

TMY-2 Weather Data for Newark, NJ								Existing Occupancy Schedule				Existing Heating/Cooling Schedule				Existing Motor Operating Schedule				Existing				Proposed							Savings		
Amb. Temp Bin deg. F	Ave Temp deg. F	M.C.W.B deg. F	M.C. Enthalpy Btu/lbma	01-08 Hours	09-16 Hours	17-24 Hours	Total Bin Hours	Occ On-Peak Hrs.	UnOcc On-Peak Hrs.	Occ Off-Peak Hrs.	UnOcc Off-Peak Hrs.	Occ On-Peak Hrs.	UnOcc On-Peak Hrs.	Occ Off-Peak Hrs.	UnOcc Off-Peak Hrs.	Occ On-Peak Hrs.	UnOcc On-Peak Hrs.	Occ Off-Peak Hrs.	UnOcc Off-Peak Hrs.	Occ. Cool/ Heat Load (MBH)	UnOcc. Cool/ Heat Load (MBH)	Occ Cooling/Heating Energy Consump. (MMBTU)	UnOcc Cooling/Heating Energy Consump. (MMBTU)	Occ On-Peak Hrs.	UnOcc On-Peak Hrs.	Occ Off-Peak Hrs.	UnOcc Off-Peak Hrs.	Occ. Cool/ Heat Load (MBH)	UnOcc. Cool/ Heat Load (MBH)	Occ Cooling/Heating Energy Consump. (MMBTU)	UnOcc Cooling/Heating Energy Consump. (MMBTU)	Cooling Energy Savings (MMBTU)	HVAC Electrical Savings (kWh)	Heating Energy Savings (MMBTU)
A	B	C	D	E	F	G	H	I	J	K	L	M	N	O	P	Q	R	S	T	U	V	W	X	Y	Z	AA	AB	AC	AD	AE	AF	AG	AH	AI
Cooling																																		
105 to 110	107.5	0.0	0.0	0	0	0	0	0	0	0	0	0	0	0	0	0	0	0	0	58	49	0	0	0	0	0	0	58	44	0	0	0	0	
100 to 105	102.5	0.0	0.0	0	0	0	0	0	0	0	0	0	0	0	0	0	0	0	0	52	44	0	0	0	0	0	0	52	40	0	0	0	0	
95 to 100	97.5	72.2	35.7	0	5	1	6	1	1	0	4	2	1	0	4	2	1	0	4	46	39	0	0	1	1	0	4	46	35	0	0	0	0	
90 to 95	92.5	73.8	37.3	0	33	7	40	8	8	0	24	11	5	0	24	11	5	0	24	40	34	0	0	8	8	0	24	40	31	0	0	0	1	
85 to 90	87.5	71.3	35.1	0	92	30	122	25	25	0	73	33	17	0	73	33	17	0	73	35	29	0	1	25	25	0	73	35	26	0	1	0	3	
80 to 85	82.5	69.2	33.2	8	330	162	500	100	102	0	298	134	68	0	298	134	68	0	298	29	24	1	3	100	102	0	298	29	22	1	3	0	14	
75 to 80	77.5	67.4	31.8	98	257	265	620	125	126	0	369	166	85	0	369	166	85	0	369	23	19	1	3	125	126	0	369	23	18	1	3	0	39	
70 to 75	72.5	64.6	29.7	325	236	286	847	170	173	0	504	227	116	0	504	227	116	0	504	17	15	1	3	170	173	0	504	17	13	1	3	0	26	
65 to 70	67.5	60.9	27.0	251	204	216	671	135	137	0	399	180	92	0	399	180	92	0	399	12	10	1	1	135	137	0	399	12	9	0	1	0	20	
60 to 65	62.5	56.3	24.0	358	268	301	927	186	189	0	552	248	127	0	552	248	127	0	552	6	5	0	1	186	189	0	552	6	4	0	1	0	28	
Heating																																		
55 to 60	57.5	50.3	20.4	217	191	192	600	121	122	0	357	161	82	0	357	161	82	0	357	(11)	(7)	1	4	121	122	0	357	(11)	0	1	0		18	4
50 to 55	52.5	46.4	18.3	218	223	289	730	147	149	0	435	196	100	0	435	196	100	0	435	(15)	(10)	2	6	147	149	0	435	(15)	(2)	2	1		22	5
45 to 50	47.5	41.8	16.0	243	196	195	634	127	129	0	377	170	87	0	377	170	87	0	377	(19)	(14)	2	7	127	129	0	377	(19)	(5)	2	3		17	5
40 to 45	42.5	38.0	14.3	193	171	149	513	103	105	0	305	137	70	0	305	137	70	0	305	(22)	(17)	2	7	103	105	0	305	(22)	(8)	2	3		14	4
35 to 40	37.5	33.9	12.5	357	311	355	1,023	206	209	0	609	274	140	0	609	274	140	0	609	(26)	(20)	5	17	206	209	0	609	(26)	(12)	5	10		28	8
30 to 35	32.5	29.3	10.6	277	221	236	734	147	150	0	437	197	101	0	437	197	101	0	437	(30)	(24)	4	15	147	150	0	437	(30)	(15)	4	9		20	6
25 to 30	27.5	24.3	8.7	159	98	134	391	79	80	0	233	105	54	0	233	105	54	0	233	(34)	(27)	3	9	79	80	0	233	(34)	(18)	3	6		11	3
20 to 25	22.5	19.3	6.8	89	48	58	195	39	40	0	116	52	27	0	116	52	27	0	116	(38)	(31)	1	5	39	40	0	116	(38)	(22)	1	3		5	1
15 to 20	17.5	14.8	5.3	74	20	31	125	25	25	0	74	33	17	0	74	33	17	0	74	(42)	(34)	1	4	25	25	0	74	(42)	(25)	1	3		3	1
10 to 15	12.5	10.0	3.8	35	7	5	47	9	10	0	28	13	6	0	28	13	6	0	28	(45)	(37)	0	1	9	10	0	28	(45)	(29)	0	1		1	0
5 to 10	7.5	5.1	2.3	17	9	8	34	7	7	0	20	9	5	0	20	9	5	0	20	(49)	(41)	0	1	7	7	0	20	(49)	(32)	0	1		1	0
0 to 5	2.5	0.6	1.0	1	0	0	1	0	0	0	1	0	0	0	1	0	0	0	1	(53)	(44)	0	0	0	0	0	1	(53)	(35)	0	0		0	0
-5 to 0	(2.5)	0.0	0.0	0	0	0	0	0	0	0	0	0	0	0	0	0	0	0	0	(57)	(47)	0	0	0	0	0	0	(57)	(39)	0	0		0	0
-10 to -5	(7.5)	0.0	0.0	0	0	0	0	0	0	0	0	0	0	0	0	0	0	0	0	(61)	(51)	0	0	0	0	0	0	(61)	(42)	0	0		0	0
-15 to -10	(12.5)	0.0	0.0	0	0	0	0	0	0	0	0	0	0	0	0	0	0	0	0	(64)	(54)	0	0	0	0	0	0	(64)	(45)	0	0		0	0
-20 to -15	(17.5)	0.0	0.0	0	0	0	0	0	0	0	0	0	0	0	0	0	0	0	0	(68)	(57)	0	0	0	0	0	0	(68)	(49)	0	0		0	0
-25 to -20	(22.5)	0.0	0.0	0	0	0	0	0	0	0	0	0	0	0	0	0	0	0	0	(72)	(61)	0	0	0	0	0	0	(72)	(52)	0	0		0	0
				2,920	2,920	2,920	8,760	1,760	1,786	0	5,214	2,346	1,200	0	5,214	2,346	1,200	0	5,214			29	89	1,760	1,786	0	5,214			28	52	1	273	37

Cell Ref.	Comment
A-H	TMY-2 Weather Data for Newark, NJ
I - L	Existing Occupancy hours
M - P	Existing Heating/Cooling hours
Q - T	Existing Motor Operating Hours
U	Occupied Cooling and Heating loads (MBH)
V	Unoccupied Cooling and Heating loads (MBH)
W	Cooling = [col U] x ([col M] + [col O]) ÷ 1,000 ÷ AD45
	Heating = -MIN([col I] + [col K] , [col M] + [col O]) x MIN([col U] + internal gains , 0) + IF([col I] + [col K] > [col M]+[col O] , (([col I] + [col K]) - ([col M] + [col O])) x MIN([col V] + internal gains , 0) , 0) ÷ 1,000 ÷ AD44
X	Cooling = [col R] x ([col J] + [col L]) ÷ 1,000 ÷ AD45
	Heating = -([col N] + [col P]) x MIN([col V] + internal gains , 0) + IF([col I] + [col K] < [col M] + [col O] , (([col M] + [col O]) - ([col I] + [col K])) x MIN([col U] + internal gains , 0)) ÷ 1,000 ÷ AD44
Y ÷ AB	Proposed Operating hours
AC	Proposed Occupied Cooling and Heating Loads:
	Cooling = ([col B] - AC60) ÷ ([col B] - AC55) x [col U]
	Heating = ([col B] - AE60) ÷ ([col B] - AE55) x [col U]
AD	Proposed Unoccupied Cooling and Heating Loads:
	Cooling = ([col B] - AC61) ÷ ([col B] - AC56) x [col V]
	Heating = ([col B] - AE61) ÷ ([col B] - AE56) x [col V] ([col V] is modified to account for reduced kitchen and building ventilation due to EMS)
AE	Cooling = [col AC] x ([col Y] + [col AA]) ÷ 1,000 ÷ AD45
	Heating = -MIN([col I] + [col K] , [col Y] + [col AA]) x MIN([col AC] + internal gains , 0) + IF([col I] + [col K] > [col Y]+[col AA] , (([col I] + [col K]) - ([col Y] + [col AA])) x MIN([col AD] + internal gains , 0) , 0) ÷ 1,000 ÷ AD44
AF	Cooling = [col AD] x ([col Z] + [col AB]) ÷ 1,000 ÷ AD45
	Heating = -([col Z] + [col AB]) x MIN([col AD] + internal gains , 0) + IF([col I] + [col K] < [col Y] + [col AA] , (([col Y] + [col AA]) - ([col I] + [col K])) x MIN([col AC] + internal gains , 0)) ÷ 1,000 ÷ AD44
AG	÷ ([col W] + [col X]) - ([col AE] + [col AF])
	HVAC Fan and Pump Savings
AH	Cooling =([col Q] + [col S] + ([col R] + [col T]) x AD49) x (AD46 + AD48) - (([col Y] + [col AA] + ([col Z] + [col AB]) x AD49) x (AD46 + AD48)
	Heating =([col Q] + [col S]) x AD46 + IF(B20<35,([col R] + [col T]) x AD49 x AD46, IF(B20>50,0,([col R] + [col T]) x AD49 x AD46)) - (([col Y] + [col AA]) x AD46 + IF(B20<35,([col Z] + [col AB]) x AD49 x AD46, IF(B20>50,0,([col Z] + [col AB]) x AD49 x AD46)))
AI	÷ ([col W] + [col X]) - ([col AE] + [col AF])

Assumptions:	Value	Unit	CELL REF	Description
Occupied Area	1,540	SF	**AD43**	
Existing Heating Plant Efficiency	98.0%		**AD44**	
Existing Chiller Efficiency	3.2	COP	**AD45**	
Fan Power	0.5	kW	**AD46**	
Heating Pump Power	0.0	kW	**AD47**	
Cooling Pump Power	0.0	kW	**AD48**	
UnOcc. Fan & Pump Cycling	10.0%		**AD49**	% Operating Hours During UnOcc.
UnOcc. Kitchen Vent. Reduction	0.0%		**AD50**	% CFM Saved
UnOcc. Ventilation Reduction	0.0%		**AD51**	% CFM Saved

Average Existing Space Temperatures					
	Cooling		Heating		Description
Occupied	72.0	**AC55**	72.0	**AE55**	
UnOccupied	76.0	**AC56**	68.0	**AE56**	

Average Proposed Space Temperatures					
	Cooling		Heating		Description
Occupied	72.0	**AC60**	72.0	**AE60**	
UnOccupied	78.0	**AC61**	55.0	**AE61**	

Page content is subject to Confidentiality Restrictions

Project Template
Ryerson-Elementary School Modulars
Integrated and New Energy Management Systems

TMY-2 Weather Data for Newark, NJ								Existing Occupancy Schedule				Existing Heating/Cooling Schedule				Existing Motor Operating Schedule				Existing				Proposed							Savings		
Amb. Temp Bin deg. F	Ave Temp deg. F	M.C.W.B deg. F	M.C. Enthalpy Btu/lbma	01-08 Hours	09-16 Hours	17-24 Hours	Total Bin Hours	Occ On-Peak Hrs.	UnOcc On-Peak Hrs.	Occ Off-Peak Hrs.	UnOcc Off-Peak Hrs.	Occ On-Peak Hrs.	UnOcc On-Peak Hrs.	Occ Off-Peak Hrs.	UnOcc Off-Peak Hrs.	Occ On-Peak Hrs.	UnOcc On-Peak Hrs.	Occ Off-Peak Hrs.	UnOcc Off-Peak Hrs.	Occ. Cool/ Heat Load (MBH)	UnOcc. Cool/ Heat Load (MBH)	Occ Cooling/Heating Energy Consump. (MMBTU)	UnOcc Cooling/Heating Energy Consump. (MMBTU)	Occ On-Peak Hrs.	UnOcc On-Peak Hrs.	Occ Off-Peak Hrs.	UnOcc Off-Peak Hrs.	Occ. Cool/ Heat Load (MBH)	UnOcc. Cool/ Heat Load (MBH)	Occ Cooling/Heating Energy Consump. (MMBTU)	UnOcc Cooling/Heating Energy Consump. (MMBTU)	Cooling Energy Savings (MMBTU)	HVAC Electrical Savings (kWh)	Heating Energy Savings (MMBTU)
A	**B**	**C**	**D**	**E**	**F**	**G**	**H**	**I**	**J**	**K**	**L**	**M**	**N**	**O**	**P**	**Q**	**R**	**S**	**T**	**U**	**V**	**W**	**X**	**Y**	**Z**	**AA**	**AB**	**AC**	**AD**	**AE**	**AF**	**AG**	**AH**	**AI**
Cooling																																		
105 to 110	107.5	0.0	0.0	0	0	0	0	0	0	0	0	0	0	0	0	0	0	0	0	39	33	0	0	0	0	0	0	39	30	0	0	0	0	
100 to 105	102.5	0.0	0.0	0	0	0	0	0	0	0	0	0	0	0	0	0	0	0	0	35	30	0	0	0	0	0	0	35	27	0	0	0	0	
95 to 100	97.5	72.2	35.7	0	5	1	6	1	1	0	4	2	1	0	4	2	1	0	4	32	27	0	0	1	1	0	4	32	24	0	0	0	0	
90 to 95	92.5	73.8	37.3	0	33	7	40	9	7	0	24	13	4	0	24	13	4	0	24	28	23	0	0	9	7	0	24	28	21	0	0	0	1	
85 to 90	87.5	71.3	35.1	0	92	30	122	29	21	0	73	38	11	0	73	38	11	0	73	24	20	0	0	29	21	0	73	24	18	0	0	0	4	
80 to 85	82.5	69.2	33.2	8	330	162	500	117	85	0	298	156	46	0	298	156	46	0	298	20	17	1	2	117	85	0	298	20	15	1	2	0	16	
75 to 80	77.5	67.4	31.8	98	257	265	620	145	106	0	369	194	57	0	369	194	57	0	369	16	13	1	2	145	106	0	369	16	12	1	2	0	41	
70 to 75	72.5	64.6	29.7	325	236	286	847	199	144	0	504	265	78	0	504	265	78	0	504	12	10	1	2	199	144	0	504	12	9	1	2	0	30	
65 to 70	67.5	60.9	27.0	251	204	216	671	157	114	0	399	210	62	0	399	210	62	0	399	8	7	0	1	157	114	0	399	8	6	0	1	0	24	
60 to 65	62.5	56.3	24.0	358	268	301	927	217	158	0	552	290	86	0	552	290	86	0	552	4	3	0	1	217	158	0	552	4	3	0	1	0	33	
Heating																																		
55 to 60	57.5	50.3	20.4	217	191	192	600	141	102	0	357	188	55	0	357	188	55	0	357	(9)	(5)	1	3	141	102	0	357	(9)	0	1	0		21	3
50 to 55	52.5	46.4	18.3	218	223	289	730	171	124	0	435	228	67	0	435	228	67	0	435	(12)	(8)	2	5	171	124	0	435	(12)	(1)	2	1		26	4
45 to 50	47.5	41.8	16.0	243	196	195	634	149	108	0	377	198	59	0	377	198	59	0	377	(15)	(10)	2	5	149	108	0	377	(15)	(4)	2	2		20	4
40 to 45	42.5	38.0	14.3	193	171	149	513	120	87	0	305	160	47	0	305	160	47	0	305	(19)	(13)	2	5	120	87	0	305	(19)	(6)	2	3		16	3
35 to 40	37.5	33.9	12.5	357	311	355	1,023	240	174	0	609	320	94	0	609	320	94	0	609	(22)	(16)	5	13	240	174	0	609	(22)	(9)	5	7		33	6
30 to 35	32.5	29.3	10.6	277	221	236	734	172	125	0	437	229	68	0	437	229	68	0	437	(25)	(18)	4	11	172	125	0	437	(25)	(11)	4	7		23	4
25 to 30	27.5	24.3	8.7	159	98	134	391	92	67	0	233	122	36	0	233	122	36	0	233	(28)	(21)	3	7	92	67	0	233	(28)	(14)	3	4		12	2
20 to 25	22.5	19.3	6.8	89	48	58	195	46	33	0	116	61	18	0	116	61	18	0	116	(31)	(23)	1	4	46	33	0	116	(31)	(17)	1	3		6	1
15 to 20	17.5	14.8	5.3	74	20	31	125	29	21	0	74	39	12	0	74	39	12	0	74	(34)	(26)	1	3	29	21	0	74	(34)	(19)	1	2		4	1
10 to 15	12.5	10.0	3.8	35	7	5	47	11	8	0	28	15	4	0	28	15	4	0	28	(38)	(28)	0	1	11	8	0	28	(38)	(22)	0	1		1	0
5 to 10	7.5	5.1	2.3	17	9	8	34	8	6	0	20	11	3	0	20	11	3	0	20	(41)	(31)	0	1	8	6	0	20	(41)	(24)	0	1		1	0
0 to 5	2.5	0.6	1.0	1	0	0	1	0	0	0	1	0	0	0	1	0	0	0	1	(44)	(33)	0	0	0	0	0	1	(44)	(27)	0	0		0	0
-5 to 0	(2.5)	0.0	0.0	0	0	0	0	0	0	0	0	0	0	0	0	0	0	0	0	(47)	(36)	0	0	0	0	0	0	(47)	(29)	0	0		0	0
-10 to -5	(7.5)	0.0	0.0	0	0	0	0	0	0	0	0	0	0	0	0	0	0	0	0	(50)	(38)	0	0	0	0	0	0	(50)	(32)	0	0		0	0
-15 to -10	(12.5)	0.0	0.0	0	0	0	0	0	0	0	0	0	0	0	0	0	0	0	0	(53)	(41)	0	0	0	0	0	0	(53)	(34)	0	0		0	0
-20 to -15	(17.5)	0.0	0.0	0	0	0	0	0	0	0	0	0	0	0	0	0	0	0	0	(56)	(43)	0	0	0	0	0	0	(56)	(37)	0	0		0	0
-25 to -20	(22.5)	0.0	0.0	0	0	0	0	0	0	0	0	0	0	0	0	0	0	0	0	(60)	(46)	0	0	0	0	0	0	(60)	(39)	0	0		0	0
				2,920	2,920	2,920	8,760	2,053	1,493	0	5,214	2,738	809	0	5,214	2,738	809	0	5,214			27	64	2,053	1,493	0	5,214			26	36	1	313	28

Cell Ref.	Comment
A-H	TMY-2 Weather Data for Newark, NJ
I - L	Existing Occupancy hours
M - P	Existing Heating/Cooling hours
Q - T	Existing Motor Operating Hours
U	Occupied Cooling and Heating loads (MBH)
V	Unoccupied Cooling and Heating loads (MBH)
W	Cooling = [col U] x ([col M] + [col O]) ÷ 1,000 ÷ AD45
	Heating = -MIN([col I] + [col K] , [col M] + [col O]) x MIN([col U] + internal gains , 0) + IF([col I] + [col K] > [col M]+[col O] , (([col I] + [col K]) - ([col M] + [col O])) x MIN([col V] + internal gains , 0) , 0) ÷ 1,000 ÷ AD44
X	Cooling = [col R] x ([col J] + [col L]) ÷ 1,000 ÷ AD45
	Heating = -([col N] + [col P]) x MIN([col V] + internal gains , 0) + IF([col I] + [col K] < [col M] + [col O] , (([col M] + [col O]) - ([col I] + [col K])) x MIN([col U] + internal gains , 0)) ÷ 1,000 ÷ AD44
Y ÷ AB	Proposed Operating hours
AC	Proposed Occupied Cooling and Heating Loads:
	Cooling = ([col B] - AC60) ÷ ([col B] - AC55) x [col U]
	Heating = ([col B] - AE60) ÷ ([col B] - AE55) x [col U]
AD	Proposed Unoccupied Cooling and Heating Loads:
	Cooling = ([col B] - AC61) ÷ ([col B] - AC56) x [col V]
	Heating = ([col B] - AE61) ÷ ([col B] - AE56) x [col V] ([col V] is modified to account for reduced kitchen and building ventilation due to EMS)
AE	Cooling = [col AC] x ([col Y] + [col AA]) ÷ 1,000 ÷ AD45
	Heating = -MIN([col I] + [col K] , [col Y] + [col AA]) x MIN([col AC] + internal gains , 0) + IF([col I] + [col K] > [col Y]+[col AA] , (([col I] + [col K]) - ([col Y] + [col AA])) x MIN([col AD] + internal gains , 0) , 0) ÷ 1,000 ÷ AD44
AF	Cooling = [col AD] x ([col Z] + [col AB]) ÷ 1,000 ÷ AD45
	Heating = -([col Z] + [col AB]) x MIN([col AD] + internal gains , 0) + IF([col I] + [col K] < [col Y] + [col AA] , (([col Y] + [col AA]) - ([col I] + [col K])) x MIN([col AC] + internal gains , 0)) ÷ 1,000 ÷ AD44
AG	÷ ([col W] + [col X]) - ([col AE] + [col AF])
	HVAC Fan and Pump Savings
AH	Cooling =([col Q] + [col S] + ([col R] + [col T]) x AD49) x (AD46 + AD48) - ((col Y] + [col AA] + ([col Z] + [col AB]) x AD49) x (AD46 + AD48)
	Heating =([col Q] + [col S]) x AD46 + IF(B20<35,([col R] + [col T]) x AD49 x AD46, IF(B20>50,0,([col R] + [col T]) x AD49 x AD46)) - (([col Y] + [col AA]) x AD46 + IF(B20<35,([col Z] + [col AB]) x AD49 x AD46, IF(B20>50,0,([col Z] + [col AB]) x AD49 x AD46)))
AI	÷ ([col W] + [col X]) - ([col AE] + [col AF])

Assumptions:	Value	Unit	CELL REF	Description
Occupied Area	1,050	SF	**AD43**	
Existing Heating Plant Efficiency	98.0%		**AD44**	
Existing Chiller Efficiency	3.5	COP	**AD45**	
Fan Power	0.5	kW	**AD46**	
Heating Pump Power	0.0	kW	**AD47**	
Cooling Pump Power	0.0	kW	**AD48**	
UnOcc. Fan & Pump Cycling	10.0%		**AD49**	% Operating Hours During UnOcc.
UnOcc. Kitchen Vent. Reduction	0.0%		**AD50**	% CFM Saved
UnOcc. Ventilation Reduction	0.0%		**AD51**	% CFM Saved

Average Existing Space Temperatures					
	Cooling		Heating		Description
Occupied	72.0	**AC55**	72.0	**AE55**	
UnOccupied	76.0	**AC56**	68.0	**AE56**	

Average Proposed Space Temperatures					
	Cooling		Heating		Description
Occupied	72.0	**AC60**	72.0	**AE60**	
UnOccupied	78.0	**AC61**	55.0	**AE61**	

Page content is subject to Confidentiality Restrictions

Project Template
John F. Kennedy-Elementary School
Integrated and New Energy Management Systems

TMY-2 Weather Data for Newark, NJ								Existing Occupancy Schedule				Existing Heating/Cooling Schedule				Existing Motor Operating Schedule				Existing				Proposed								Savings		
Amb. Temp Bin deg. F	Ave Temp deg. F	M.C.W.B deg. F	M.C. Enthalpy Btu/lbma	01-08 Hours	09-16 Hours	17-24 Hours	Total Bin Hours	Occ On-Peak Hrs.	UnOcc On-Peak Hrs.	Occ Off-Peak Hrs.	UnOcc Off-Peak Hrs.	Occ On-Peak Hrs.	UnOcc On-Peak Hrs.	Occ Off-Peak Hrs.	UnOcc Off-Peak Hrs.	Occ On-Peak Hrs.	UnOcc On-Peak Hrs.	Occ Off-Peak Hrs.	UnOcc Off-Peak Hrs.	Occ. Cool/ Heat Load (MBH)	UnOcc. Cool/ Heat Load (MBH)	Occ Cooling/Heating Energy Consump. (MMBTU)	UnOcc Cooling/Heating Energy Consump. (MMBTU)	Occ On-Peak Hrs.	UnOcc On-Peak Hrs.	Occ Off-Peak Hrs.	UnOcc Off-Peak Hrs.	Occ. Cool/ Heat Load (MBH)	UnOcc. Cool/ Heat Load (MBH)	Occ Cooling/Heating Energy Consump. (MMBTU)	UnOcc Cooling/Heating Energy Consump. (MMBTU)	Cooling Energy Savings (MMBTU)	HVAC Electrical Savings (kWh)	Heating Energy Savings (MMBTU)
A	**B**	**C**	**D**	**E**	**F**	**G**	**H**	**I**	**J**	**K**	**L**	**M**	**N**	**O**	**P**	**Q**	**R**	**S**	**T**	**U**	**V**	**W**	**X**	**Y**	**Z**	**AA**	**AB**	**AC**	**AD**	**AE**	**AF**	**AG**	**AH**	**AI**
Cooling																																		
105 to 110	107.5	0.0	0.0	0	0	0	0	0	0	0	0	0	0	0	0	0	0	0	0	11	9	0	0	0	0	0	0	11	9	0	0	0	0	
100 to 105	102.5	0.0	0.0	0	0	0	0	0	0	0	0	0	0	0	0	0	0	0	0	10	9	0	0	0	0	0	0	10	8	0	0	0	0	
95 to 100	97.5	72.2	35.7	0	5	1	6	1	1	0	4	2	1	0	4	2	1	0	4	9	8	0	0	1	1	0	4	9	7	0	0	0	0	
90 to 95	92.5	73.8	37.3	0	33	7	40	8	8	0	24	11	5	0	24	11	5	0	24	8	7	0	0	8	8	0	24	8	6	0	0	0	0	
85 to 90	87.5	71.3	35.1	0	92	30	122	25	25	0	73	33	17	0	73	33	17	0	73	7	6	0	0	25	25	0	73	7	5	0	0	0	0	
80 to 85	82.5	69.2	33.2	8	330	162	500	100	102	0	298	134	68	0	298	134	68	0	298	6	5	0	1	100	102	0	298	6	4	0	1	0	0	
75 to 80	77.5	67.4	31.8	98	257	265	620	125	126	0	369	166	85	0	369	166	85	0	369	5	4	0	1	125	126	0	369	5	3	0	1	0	0	
70 to 75	72.5	64.6	29.7	325	236	286	847	170	173	0	504	227	116	0	504	227	116	0	504	3	3	0	1	170	173	0	504	3	3	0	1	0	0	
65 to 70	67.5	60.9	27.0	251	204	216	671	135	137	0	399	180	92	0	399	180	92	0	399	2	2	0	0	135	137	0	399	2	2	0	0	0	0	
60 to 65	62.5	56.3	24.0	358	268	301	927	186	189	0	552	248	127	0	552	248	127	0	552	1	1	0	0	186	189	0	552	1	1	0	0	0	0	
Heating																																		
55 to 60	57.5	50.3	20.4	217	191	192	600	121	122	0	357	161	82	0	357	161	82	0	357	(4)	(2)	0	1	121	122	0	357	(4)	0	0	0		0	1
50 to 55	52.5	46.4	18.3	218	223	289	730	147	149	0	435	196	100	0	435	196	100	0	435	(6)	(3)	1	2	147	149	0	435	(6)	(1)	1	0		0	2
45 to 50	47.5	41.8	16.0	243	196	195	634	127	129	0	377	170	87	0	377	170	87	0	377	(7)	(4)	1	2	127	129	0	377	(7)	(2)	1	1		0	2
40 to 45	42.5	38.0	14.3	193	171	149	513	103	105	0	305	137	70	0	305	137	70	0	305	(8)	(6)	1	2	103	105	0	305	(8)	(3)	1	1		0	1
35 to 40	37.5	33.9	12.5	357	311	355	1,023	206	209	0	609	274	140	0	609	274	140	0	609	(10)	(7)	2	6	206	209	0	609	(10)	(4)	2	3		0	3
30 to 35	32.5	29.3	10.6	277	221	236	734	147	150	0	437	197	101	0	437	197	101	0	437	(11)	(8)	2	5	147	150	0	437	(11)	(5)	2	3		0	2
25 to 30	27.5	24.3	8.7	159	98	134	391	79	80	0	233	105	54	0	233	105	54	0	233	(13)	(9)	1	3	79	80	0	233	(13)	(6)	1	2		0	1
20 to 25	22.5	19.3	6.8	89	48	58	195	39	40	0	116	52	27	0	116	52	27	0	116	(14)	(10)	1	2	39	40	0	116	(14)	(7)	1	1		0	1
15 to 20	17.5	14.8	5.3	74	20	31	125	25	25	0	74	33	17	0	74	33	17	0	74	(16)	(11)	0	1	25	25	0	74	(16)	(8)	0	1		0	0
10 to 15	12.5	10.0	3.8	35	7	5	47	9	10	0	28	13	6	0	28	13	6	0	28	(17)	(12)	0	0	9	10	0	28	(17)	(9)	0	0		0	0
5 to 10	7.5	5.1	2.3	17	9	8	34	7	7	0	20	9	5	0	20	9	5	0	20	(18)	(13)	0	0	7	7	0	20	(18)	(10)	0	0		0	0
0 to 5	2.5	0.6	1.0	1	0	0	1	0	0	0	1	0	0	0	1	0	0	0	1	(20)	(14)	0	0	0	0	0	1	(20)	(11)	0	0		0	0
-5 to 0	(2.5)	0.0	0.0	0	0	0	0	0	0	0	0	0	0	0	0	0	0	0	0	(21)	(15)	0	0	0	0	0	0	(21)	(13)	0	0		0	0
-10 to -5	(7.5)	0.0	0.0	0	0	0	0	0	0	0	0	0	0	0	0	0	0	0	0	(23)	(16)	0	0	0	0	0	0	(23)	(14)	0	0		0	0
-15 to -10	(12.5)	0.0	0.0	0	0	0	0	0	0	0	0	0	0	0	0	0	0	0	0	(24)	(18)	0	0	0	0	0	0	(24)	(15)	0	0		0	0
-20 to -15	(17.5)	0.0	0.0	0	0	0	0	0	0	0	0	0	0	0	0	0	0	0	0	(26)	(19)	0	0	0	0	0	0	(26)	(16)	0	0		0	0
-25 to -20	(22.5)	0.0	0.0	0	0	0	0	0	0	0	0	0	0	0	0	0	0	0	0	(27)	(20)	0	0	0	0	0	0	(27)	(17)	0	0		0	0
				2,920	2,920	2,920	8,760	1,760	1,786	0	5,214	2,346	1,200	0	5,214	2,346	1,200	0	5,214			10	28	1,760	1,786	0	5,214			10	15	0	0	12

Cell Ref.	Comment
A-H	TMY-2 Weather Data for Newark, NJ
I - L	Existing Occupancy hours
M - P	Existing Heating/Cooling hours
Q - T	Existing Motor Operating Hours
U	Occupied Cooling and Heating loads (MBH)
V	Unoccupied Cooling and Heating loads (MBH)
W	Cooling = [col U] x ([col M] + [col O]) ÷ 1,000 ÷ AD45
	Heating = -MIN([col I] + [col K] , [col M] + [col O]) x MIN([col U] + internal gains , 0) + IF([col I] + [col K] > [col M]+[col O] , (([col I] + [col K]) - ([col M] + [col O])) x MIN([col V] + internal gains , 0) , 0) ÷ 1,000 ÷ AD44
X	Cooling = [col R] x ([col J] + [col L]) ÷ 1,000 ÷ AD45
	Heating = -([col N] + [col P]) x MIN([col V] + internal gains , 0) + IF([col I] + [col K] < [col M] + [col O] , (([col M] + [col O]) - ([col I] + [col K])) x MIN([col U] + internal gains , 0)) ÷ 1,000 ÷ AD44
Y ÷ AB	Proposed Operating hours
AC	Proposed Occupied Cooling and Heating Loads:
	Cooling = ([col B] - AC60) ÷ ([col B] - AC55) x [col U]
	Heating = ([col B] - AE60) ÷ ([col B] - AE55) x [col U]
AD	Proposed Unoccupied Cooling and Heating Loads:
	Cooling = ([col B] - AC61) ÷ ([col B] - AC56) x [col V]
	Heating = ([col B] - AE61) ÷ ([col B] - AE56) x [col V] ([col V] is modified to account for reduced kitchen and building ventilation due to EMS)
AE	Cooling = [col AC] x ([col Y] + [col AA]) ÷ 1,000 ÷ AD45
	Heating = -MIN([col I] + [col K] , [col Y] + [col AA]) x MIN([col AC] + internal gains , 0) + IF([col I] + [col K] > [col Y]+[col AA] , (([col I] + [col K]) - ([col Y] + [col AA])) x MIN([col AD] + internal gains , 0) , 0) ÷ 1,000 ÷ AD44
AF	Cooling = [col AD] x ([col Z] + [col AB]) ÷ 1,000 ÷ AD45
	Heating = -([col Z] + [col AB]) x MIN([col AD] + internal gains , 0) + IF([col I] + [col K] < [col Y] + [col AA] , (([col Y] + [col AA]) - ([col I] + [col K])) x MIN([col AC] + internal gains , 0)) ÷ 1,000 ÷ AD44
AG	= ([col W] + [col X]) - ([col AE] + [col AF])
	HVAC Fan and Pump Savings
AH	Cooling =([col Q] + [col S] + ([col R] + [col T]) x AD49) x (AD46 + AD48) - ((col Y] + [col AA] + ([col Z] + [col AB]) x AD49) x (AD46 + AD48)
	Heating =([col Q] + [col S]) x AD46 + IF(B20<35,([col R] + [col T]) x AD49 x AD46, IF(B20>50,0,([col R] + [col T]) x AD49 x AD46)) - (([col Y] + [col AA]) x AD46 + IF(B20<35,([col Z] + [col AB]) x AD49 x AD46, IF(B20>50,0,([col Z] + [col AB]) x AD49 x AD46)))
AI	= ([col W] + [col X]) - ([col AE] + [col AF])

Assumptions:	Value	Unit	CELL	Description
			REF	
Occupied Area	300	SF	AD43	
Existing Heating Plant Efficiency	98.0%		AD44	
Existing Chiller Efficiency	2.9	COP	AD45	
Fan Power	0.0	kW	AD46	
Heating Pump Power	0.0	kW	AD47	
Cooling Pump Power	0.0	kW	AD48	
UnOcc. Fan & Pump Cycling	10.0%		AD49	% Operating Hours During UnOcc.
UnOcc. Kitchen Vent. Reduction	0.0%		AD50	% CFM Saved
UnOcc. Ventilation Reduction	0.0%		AD51	% CFM Saved

Average Existing Space Temperatures					
	Cooling		Heating		Description
Occupied	72.0	AC55	72.0	AE55	
UnOccupied	76.0	AC56	68.0	AE56	

Average Proposed Space Temperatures					
	Cooling		Heating		Description
Occupied	72.0	AC60	72.0	AE60	
UnOccupied	78.0	AC61	55.0	AE61	

Page content is subject to Confidentiality Restrictions

Project Template
Schuyler-Colfax-Middle School
Integrated and New Energy Management Systems

TMY-2 Weather Data for Newark, NJ								Existing Occupancy Schedule				Existing Heating/Cooling Schedule				Existing Motor Operating Schedule				Existing				Proposed								Savings		
Amb. Temp Bin deg. F	Ave Temp deg. F	M.C.W.B deg. F	M.C. Enthalpy Btu/lbma	01-08 Hours	09-16 Hours	17-24 Hours	Total Bin Hours	Occ On-Peak Hrs.	UnOcc On-Peak Hrs.	Occ Off-Peak Hrs.	UnOcc Off-Peak Hrs.	Occ On-Peak Hrs.	UnOcc On-Peak Hrs.	Occ Off-Peak Hrs.	UnOcc Off-Peak Hrs.	Occ On-Peak Hrs.	UnOcc On-Peak Hrs.	Occ Off-Peak Hrs.	UnOcc Off-Peak Hrs.	Occ. Cool/ Heat Load (MBH)	UnOcc. Cool/ Heat Load (MBH)	Occ Cooling/Heating Energy Consump. (MMBTU)	UnOcc Cooling/Heating Energy Consump. (MMBTU)	Occ On-Peak Hrs.	UnOcc On-Peak Hrs.	Occ Off-Peak Hrs.	UnOcc Off-Peak Hrs.	Occ. Cool/ Heat Load (MBH)	UnOcc. Cool/ Heat Load (MBH)	Occ Cooling/Heating Energy Consump. (MMBTU)	UnOcc Cooling/Heating Energy Consump. (MMBTU)	Cooling Energy Savings (MMBTU)	HVAC Electrical Savings (kWh)	Heating Energy Savings (MMBTU)
A	B	C	D	E	F	G	H	I	J	K	L	M	N	O	P	Q	R	S	T	U	V	W	X	Y	Z	AA	AB	AC	AD	AE	AF	AG	AH	AI
Cooling																																		
105 to 110	107.5	0.0	0.0	0	0	0	0	0	0	0	0	0	0	0	0	0	0	0	0	58	49	0	0	0	0	0	0	58	44	0	0	0	0	
100 to 105	102.5	0.0	0.0	0	0	0	0	0	0	0	0	0	0	0	0	0	0	0	0	52	44	0	0	0	0	0	0	52	40	0	0	0	0	
95 to 100	97.5	72.2	35.7	0	5	1	6	2	1	0	4	2	0	0	4	2	0	0	4	46	39	0	0	2	1	0	4	46	35	0	0	0	0	
90 to 95	92.5	73.8	37.3	0	33	7	40	13	3	0	24	15	2	0	24	15	2	0	24	40	34	0	0	13	3	0	24	40	31	0	0	0	0	
85 to 90	87.5	71.3	35.1	0	92	30	122	39	11	0	73	45	5	0	73	45	5	0	73	35	29	1	1	39	11	0	73	35	26	0	1	0	0	
80 to 85	82.5	69.2	33.2	8	330	162	500	159	44	0	298	184	19	0	298	184	19	0	298	29	24	2	3	159	44	0	298	29	22	2	3	0	0	
75 to 80	77.5	67.4	31.8	98	257	265	620	197	54	0	369	228	23	0	369	228	23	0	369	23	19	2	3	197	54	0	369	23	18	2	3	0	0	
70 to 75	72.5	64.6	29.7	325	236	286	847	269	74	0	504	311	32	0	504	311	32	0	504	17	15	2	3	269	74	0	504	17	13	2	3	0	0	
65 to 70	67.5	60.9	27.0	251	204	216	671	213	59	0	399	246	25	0	399	246	25	0	399	12	10	1	1	213	59	0	399	12	9	1	1	0	0	
60 to 65	62.5	56.3	24.0	358	268	301	927	294	81	0	552	340	35	0	552	340	35	0	552	6	5	1	1	294	81	0	552	6	4	1	1	0	0	
Heating																																		
55 to 60	57.5	50.3	20.4	217	191	192	600	190	52	0	357	220	23	0	357	220	23	0	357	(14)	(7)	3	3	190	52	0	357	(14)	0	3	0		0	3
50 to 55	52.5	46.4	18.3	218	223	289	730	232	64	0	435	268	28	0	435	268	28	0	435	(19)	(10)	4	6	232	64	0	435	(19)	(2)	4	1		0	5
45 to 50	47.5	41.8	16.0	243	196	195	634	201	55	0	377	233	24	0	377	233	24	0	377	(23)	(14)	5	6	201	55	0	377	(23)	(5)	5	2		0	4
40 to 45	42.5	38.0	14.3	193	171	149	513	163	45	0	305	188	19	0	305	188	19	0	305	(28)	(17)	5	6	163	45	0	305	(28)	(8)	5	3		0	3
35 to 40	37.5	33.9	12.5	357	311	355	1,023	325	89	0	609	376	39	0	609	376	39	0	609	(33)	(20)	11	15	325	89	0	609	(33)	(12)	11	8		0	7
30 to 35	32.5	29.3	10.6	277	221	236	734	233	64	0	437	269	28	0	437	269	28	0	437	(38)	(24)	9	13	233	64	0	437	(38)	(15)	9	8		0	5
25 to 30	27.5	24.3	8.7	159	98	134	391	124	34	0	233	144	15	0	233	144	15	0	233	(42)	(27)	5	8	124	34	0	233	(42)	(18)	5	5		0	3
20 to 25	22.5	19.3	6.8	89	48	58	195	62	17	0	116	72	7	0	116	72	7	0	116	(47)	(31)	3	4	62	17	0	116	(47)	(22)	3	3		0	1
15 to 20	17.5	14.8	5.3	74	20	31	125	40	11	0	74	46	5	0	74	46	5	0	74	(52)	(34)	2	3	40	11	0	74	(52)	(25)	2	2		0	1
10 to 15	12.5	10.0	3.8	35	7	5	47	15	4	0	28	17	2	0	28	17	2	0	28	(57)	(37)	1	1	15	4	0	28	(57)	(29)	1	1		0	0
5 to 10	7.5	5.1	2.3	17	9	8	34	11	3	0	20	12	1	0	20	12	1	0	20	(61)	(41)	1	1	11	3	0	20	(61)	(32)	1	1		0	0
0 to 5	2.5	0.6	1.0	1	0	0	1	0	0	0	1	0	0	0	1	0	0	0	1	(66)	(44)	0	0	0	0	0	1	(66)	(35)	0	0		0	0
-5 to 0	(2.5)	0.0	0.0	0	0	0	0	0	0	0	0	0	0	0	0	0	0	0	0	(71)	(47)	0	0	0	0	0	0	(71)	(39)	0	0		0	0
-10 to -5	(7.5)	0.0	0.0	0	0	0	0	0	0	0	0	0	0	0	0	0	0	0	0	(76)	(51)	0	0	0	0	0	0	(76)	(42)	0	0		0	0
-15 to -10	(12.5)	0.0	0.0	0	0	0	0	0	0	0	0	0	0	0	0	0	0	0	0	(80)	(54)	0	0	0	0	0	0	(80)	(45)	0	0		0	0
-20 to -15	(17.5)	0.0	0.0	0	0	0	0	0	0	0	0	0	0	0	0	0	0	0	0	(85)	(57)	0	0	0	0	0	0	(85)	(49)	0	0		0	0
-25 to -20	(22.5)	0.0	0.0	0	0	0	0	0	0	0	0	0	0	0	0	0	0	0	0	(90)	(61)	0	0	0	0	0	0	(90)	(52)	0	0		0	0
				2,920	2,920	2,920	8,760	2,781	765	0	5,214	3,215	331	0	5,214	3,215	331	0	5,214			56	78	2,781	765	0	5,214			54	45	1	0	33

Cell Ref.	Comment
A-H	TMY-2 Weather Data for Newark, NJ
I - L	Existing Occupancy hours
M - P	Existing Heating/Cooling hours
Q - T	Existing Motor Operating Hours
U	Occupied Cooling and Heating loads (MBH)
V	Unoccupied Cooling and Heating loads (MBH)
W	Cooling = [col U] x ([col M] + [col O]) ÷ 1,000 ÷ AD45
	Heating = -MIN([col I] + [col K] , [col M] + [col O]) x MIN([col U] + internal gains , 0) + IF([col I] + [col K] > [col M]+[col O] , (([col I] + [col K]) - ([col M] + [col O])) x MIN([col V] + internal gains , 0) , 0) ÷ 1,000 ÷ AD44
X	Cooling = [col R] x ([col J] + [col L]) ÷ 1,000 ÷ AD45
	Heating = -([col N] + [col P]) x MIN([col V] + internal gains , 0) + IF([col I] + [col K] < [col M] + [col O] , (([col M] + [col O]) - ([col I] + [col K])) x MIN([col U] + internal gains , 0)) ÷ 1,000 ÷ AD44
Y ÷ AB	Proposed Operating hours
AC	Proposed Occupied Cooling and Heating Loads:
	Cooling = ([col B] - AC60) ÷ ([col B] - AC55) x [col U]
	Heating = ([col B] - AE60) ÷ ([col B] - AE55) x [col U]
AD	Proposed Unoccupied Cooling and Heating Loads:
	Cooling = ([col B] - AC61) ÷ ([col B] - AC56) x [col V]
	Heating = ([col B] - AE61) ÷ ([col B] - AE56) x [col V] ([col V] is modified to account for reduced kitchen and building ventilation due to EMS)
AE	Cooling = [col AC] x ([col Y] + [col AA]) ÷ 1,000 ÷ AD45
	Heating = -MIN([col I] + [col K] , [col Y] + [col AA]) x MIN([col AC] + internal gains , 0) + IF([col I] + [col K] > [col Y]+[col AA] , (([col I] + [col K]) - ([col Y] + [col AA])) x MIN([col AD] + internal gains , 0) , 0) ÷ 1,000 ÷ AD44
AF	Cooling = [col AD] x ([col Z] + [col AB]) ÷ 1,000 ÷ AD45
	Heating = -([col Z] + [col AB]) x MIN([col AD] + internal gains , 0) + IF([col I] + [col K] < [col Y] + [col AA] , (([col Y] + [col AA]) - ([col I] + [col K])) x MIN([col AC] + internal gains , 0)) ÷ 1,000 ÷ AD44
AG	÷ ([col W] + [col X]) - ([col AE] + [col AF])
	HVAC Fan and Pump Savings
AH	Cooling =([col Q] + [col S] + ([col R] + [col T]) x AD49) x (AD46 + AD48) - ((col Y] + [col AA] + ([col Z] + [col AB]) x AD49) x (AD46 + AD48)
	Heating =([col Q] + [col S]) x AD46 + IF(B20<35,([col R] + [col T]) x AD49 x AD46, IF(B20>50,0,([col R] + [col T]) x AD49 x AD46)) - (([col Y] + [col AA]) x AD46 + IF(B20<35,([col Z] + [col AB]) x AD49 x AD46, IF(B20>50,0,([col Z] + [col AB]) x AD49 x AD46)))
AI	÷ ([col W] + [col X]) - ([col AE] + [col AF])

Assumptions:	Value	Unit	CELL	Description
			REF	
Occupied Area	1,540	SF	AD43	
Existing Heating Plant Efficiency	98.0%		AD44	
Existing Chiller Efficiency	2.9	COP	AD45	
Fan Power	0.0	kW	AD46	
Heating Pump Power	0.0	kW	AD47	
Cooling Pump Power	0.0	kW	AD48	
UnOcc. Fan & Pump Cycling	10.0%		AD49	% Operating Hours During UnOcc.
UnOcc. Kitchen Vent. Reduction	0.0%		AD50	% CFM Saved
UnOcc. Ventilation Reduction	0.0%		AD51	% CFM Saved

Average Existing Space Temperatures					
	Cooling		Heating		Description
Occupied	72.0	AC55	72.0	AE55	
UnOccupied	76.0	AC56	68.0	AE56	

Average Proposed Space Temperatures					
	Cooling		Heating		Description
Occupied	72.0	AC60	72.0	AE60	
UnOccupied	78.0	AC61	55.0	AE61	

Page content is subject to Confidentiality Restrictions

Appendix for ECM 4:
Integrated and New Energy Management Systems

II. Manufacturer Specification Sheets

This page is intentionally left blank.

FX05 FIELD CONTROLLER

FACILITY EXPLORER
BY JOHNSON CONTROLS

The Facility Explorer FX05 Field Controller offers a powerful and flexible solution for a wide variety of HVAC and refrigeration control requirements. The FX05 is designed to provide direct, closed loop control over mechanical HVAC or refrigeration equipment, either as a standalone device or as a part of a larger, networked control system. Its small, compact package makes it easy to fit the FX05 inside of the mechanical equipment or into a control panel.

Supported Inputs/Outputs

Up to 16 physical inputs and outputs can be directly connected to the FX05, including:

- 4 Analog Inputs: A99 silicon or PT1000 platinum, depending on model. Can also accept 0-10V, 4-20 mA, and ratiometric sensors using analog input converters.
- 5 Digital Inputs: voltage free contacts
- 1 Analog Output: 0-10 V
- 6 Digital Outputs:
  - 6 SPST relays (250 VAC, 5A), or
  - SPST relays (250 VAC, 5A) and 2 triacs (24 VAC, 0.5A)

FX05 FIELD CONTROLLER

FACILITY EXPLORER

Choice of Programming Environment

The FX05 supports two methods of application programming: configurable and programmable.

- Configurable: With the FX Builder Express Tool, you can select from a library of standard applications that were specifically developed for the FX05 and configure them to meet your specific control requirements using graphical plug-ins.
- Programmable: With the FX Builder Tool, you can develop a completely unique, custom control application for the FX05. The FX Builder Tool can also be used to open up and customize any of the applications in our standards library.

As a result, the FX05 can be adapted to meet most control requirements.

Integrated User Interface

The FX05 features a built-in user interface, allowing the FX05's control points to be easily monitored and/or adjusted. The integrated user interface includes three 7-segment LEDs, 3 discrete status LEDs, and 4 push-buttons. The FX05's user interface is completely customizable, providing the ability to format the displayed information and structure its navigation as desired.

Modular Networking

The FX05's usefulness is expanded by means of its modular networking capability. The FX05 can be used as a standalone controller, or it can be fitted with an optional network communication card, allowing it to be used in an N2-based or LonWorks®-based building automation system. Modular networking makes for a cost effective method to provide either standalone or networked capabilities.

Application Examples

- Fan Coil Controller
- Pump Lead/Lag Controller
- Hot Water Reset Controller
- Small Chiller Controller

Specifications:

General

- 24 VAC +/- 15%
- 6 VA

Ambient Operating Conditions

- -4° to 122° F (-20° to 50° C)
- 10-90% RH (non condensing)

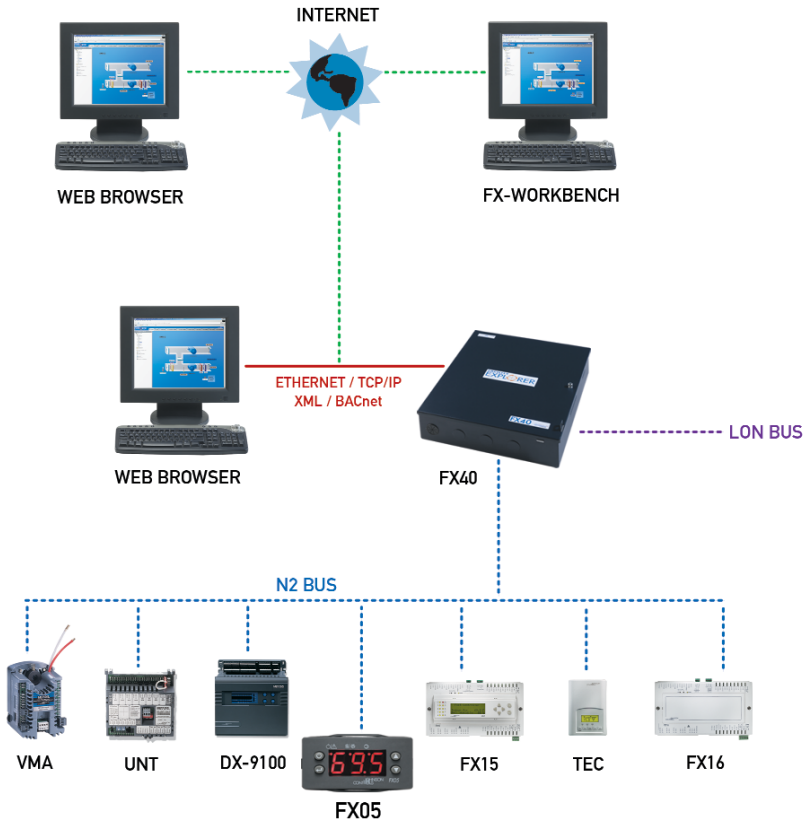

LonWorks® is a registered trademark of Echelon Corporation

JOHNSON CONTROLS

© 2005 Johnson Controls, Inc.

P.O. Box 423, Milwaukee, WI 53201

Printed in USA PUBL-3893

FX06 FIELD CONTROLLER

FACILITY EXPLORER
BY JOHNSON CONTROLS

The Facility Explorer FX06 Field Controller offers a powerful and flexible solution for a wide variety of HVAC and refrigeration control requirements. The FX06 is designed to provide direct, closed loop control over mechanical HVAC or refrigeration equipment, either as a standalone device or as a part of a larger, networked control system.

Supported Inputs/Outputs

Up to 17 physical inputs and outputs can be directly connected to the FX06, including:

- 4 Analog Inputs: active or passive, software configurable
- 5 Digital Inputs: voltage free contacts
- 2 Analog Outputs:
  - Two 0-10V, or
  - One 0-10V and one Pulse Width Modulated (PWM)
- 6 Digital Outputs:
  - 6 SPST relays (250 VAC, 3A), or
  - 2 triacs (24 VAC, 0.5A), 3 interlocked SPST relays (250 VAC, 3A), and 1 free SPST relay (250 VAC, 3A), or
  - 2 triacs (24 VAC, 0.5A) and 4 free SPST relays (250 VAC, 3A)

Programming Environment Flexibility

The FX06 supports two methods of application programming: configurable and fully programmable.

- Configurable: With the FX Builder Express Tool, you can select from a library of standard applications that were specifically developed for the FX06 and configure them to meet your specific control requirements using graphical plug-ins.
- Programmable: With the FX Builder Tool, you can develop a completely unique, custom control application for the FX06. The FX Builder Tool can also be used to open up and customize any of the applications in our standards library.

As a result, the FX06 can be easily adapted to meet most control requirements.

FX06 FIELD CONTROLLER

FACILITY EXPLORER

Onboard Scheduling and Alarming

With its support of onboard scheduling and alarm generation, the FX06's application possibilities are expanded. An embedded real-time clock enables time scheduling of start/stop commands and setpoint changes to the control system. In addition, the FX06 can be configured to generate time-stamped alarms based on system or application events. It supports several methods for users to access the schedule and alarm information, depending on which optional accessories are selected.

User Interfaces

The FX06 features a built-in user interface, allowing the control points to be easily monitored and/or adjusted. The integral user interface includes a 2 line, 4 character LCD display screen, 18 graphical status icons and 4 pushbuttons. The LCD's background color can be configured blue or red to indicate an alarm or other special condition.

Plus, the FX06 also supports an optional, remote-mounted medium user interface (MUI). The MUI includes a 4 line, 20 character LCD display screen, 10 discrete status LEDs, and 6 pushbuttons. The MUI can be mounted nearby in a panel or remotely on a wall.

These user interfaces are completely customizable, so you can format the displayed information, structure navigation, and assign passwords and access rights as desired.

Modular Networking

Modular networking capability enhances its capabilties. The FX06 can be used as a standalone controller, or it can be fitted with an optional network communication card, so it can be used in an N2-based or LonWorks®-based building automation system. Modular networking makes for a cost-effective method to provide either stand alone or networked capabilities.

Optional Dial Out SMS Service

When used as a standalone controller, the FX06 can support an optional RS-232 communications card, which means you can connect an external GSM modem to be connected for a remote dial-out. This sends SMS (short message service) messages to report and notify alarms and events.

Application Examples

- Fan Coil Controller
- Unit Ventilator Controller
- Close Control Unit Controller
- Refrigeration Controller, including control of multi-compressors and scroll compressors

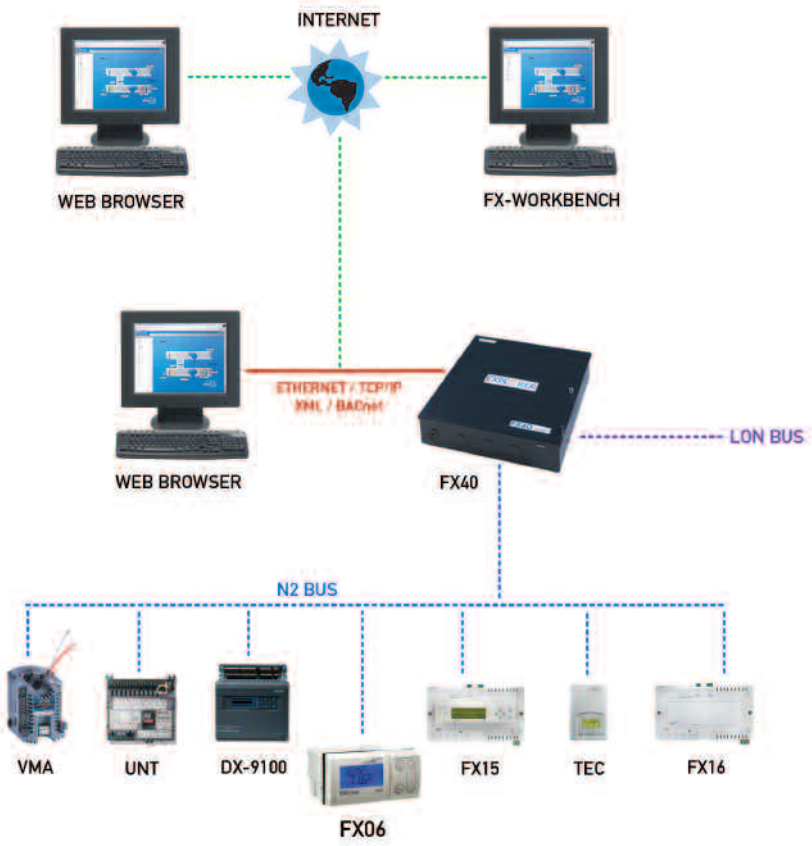

LonWorks® is a registered trademark of Echelon Corporation

JOHNSON CONTROLS

© 2006 Johnson Controls, Inc.

P.O. Box 423, Milwaukee, WI 53201

Printed in USA PUBL-3940

FX07 FIELD CONTROLLER

FACILITY EXPLORER
BY JOHNSON CONTROLS

The Facility Explorer FX07 Field Controller offers a powerful and flexible solution for a wide variety of HVAC and refrigeration control requirements. The FX07 is designed to provide direct, closed loop control over mechanical HVAC or refrigeration equipment, either as a standalone device or as a part of a larger, networked control system.

Supported Inputs/Outputs

Up to 17 physical inputs and outputs can be directly connected to the FX07, including:

- 4 Analog Inputs: active or passive, software configurable
- 5 Digital Inputs: voltage free contacts
- 2 Analog Outputs:
  - Two 0-10V, or
  - One 0-10V and one Pulse Width Modulated (PWM)
- 6 Digital Outputs:
  - 6 SPST relays (250 VAC, 3A), or
  - 2 triacs (24 VAC, 0.5A), 3 interlocked SPST relays (250 VAC, 3A), and 1 free SPST relay (250 VAC, 3A), or
  - 2 triacs (24 VAC, 0.5A) and 4 free SPST relays (250 VAC, 3A)

Programming Environment Flexibility

The FX07 supports two methods of application programming: configurable and fully programmable.

- Configurable: With the FX Builder Express Tool, you can select from a library of standard applications that were specifically developed for the FX07 and configure them to meet your specific control requirements using graphical plug-ins.
- Programmable: With the FX Builder Tool, you can develop a completely unique, custom control application for the FX07. The FX Builder Tool can also be used to open up and customize any of the applications in our standards library.

As a result, the FX07 can be easily adapted to meet most control requirements.

FX07 FIELD CONTROLLER

FACILITY EXPLORER

Onboard Scheduling and Alarming

With its support of onboard scheduling and alarm generation, the FX07's application possibilities are expanded. An embedded real-time clock enables time scheduling of start/stop commands and setpoint changes to the control system. In addition, the FX07 can be configured to generate time-stamped alarms based on system or application events. It supports several methods for users to access the schedule and alarm information, depending on which optional accessories are selected.

User Interfaces

The FX07 features an optional built-in user interface, allowing the control points to be easily monitored and/or adjusted. The integral user interface includes a 2 line, 4 character LCD display screen, 18 graphical status icons and 4 pushbuttons. The LCD's background color can be configured blue or red to indicate an alarm or other special condition.

Plus, the FX07 also supports an optional, remote-mounted medium user interface (MUI). The MUI includes a 4 line, 26 character LCD display screen, 10 discrete status LEDs, and 6 pushbuttons. The MUI can be mounted nearby in a panel or remotely on a wall.

These user interfaces are completely customizable, so you can format the displayed information, structure navigation, and assign passwords and access rights as desired.

Modular Networking

Modular networking capability enhances its capabilties. The FX07 can be used as a standalone controller, or it can be fitted with an optional network communication card, so it can be used in an N2-based or LonWorks®-based building automation system. Modular networking makes for a cost-effective method to provide either stand alone or networked capabilities.

Optional Dial Out SMS Service

When used as a standalone controller, the FX07 can support an optional RS-232 communications card, which means you can connect an external GSM modem for remote dial-out. This sends SMS (short message service) messages to report and notify alarms and events.

Application Examples

- Fan Coil Controller
- Unit Ventilator Controller
- Close Control Unit Controller
- Refrigeration Controller, including control of multi-compressors and scroll compressors

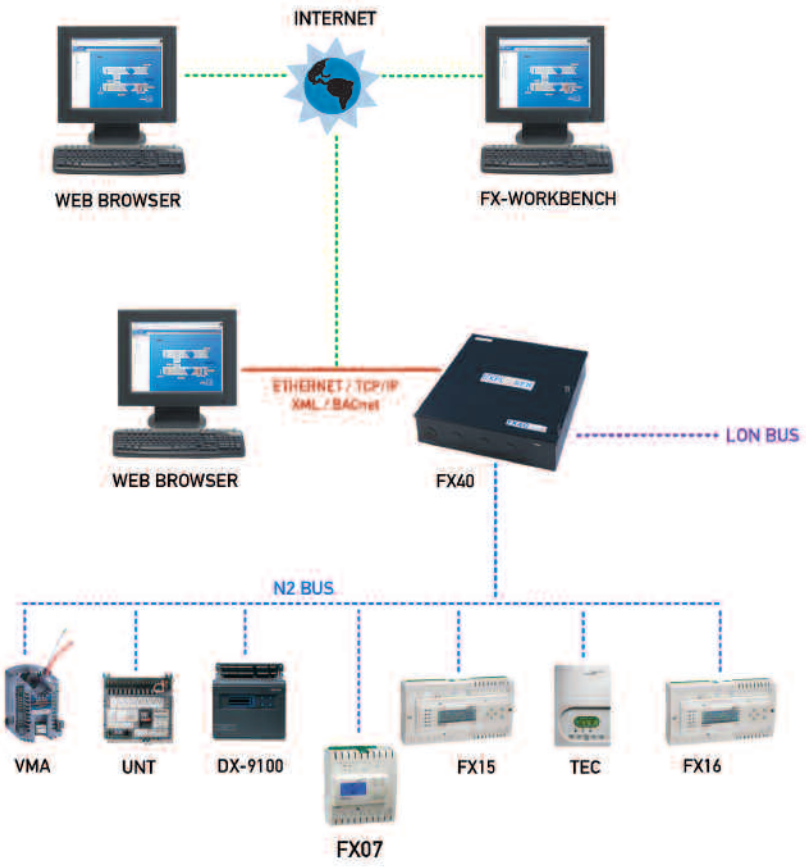

LonWorks® is a registered trademark of Echelon Corporation

JOHNSON CONTROLS

© 2007 Johnson Controls, Inc.

P.O. Box 423, Milwaukee, WI 53201
www.johnsoncontrols.com

Printed in USA PUBL-3988

FX14 FIELD CONTROLLER

FACILITY EXPLORER
BY JOHNSON CONTROLS

The Facility Explorer FX14 Field Controller offers a powerful and flexible solution for a wide variety of HVAC and refrigeration control requirements. The FX14 will provide direct, closed loop control over mechanical HVAC or refrigeration equipment, either as a standalone device or as a part of a larger, networked control system.

Supported Inputs/Outputs

Up to 29 physical inputs and outputs can be directly connected to the FX14, including:

- 6 Analog Inputs: active or passive, software configurable
- 12 Digital Inputs: voltage free contacts
- 2 Analog Outputs: 0-10 V or Pulse Width Modulated (PWM)
- 9 Digital Outputs:
  - 9 SPST relays (250 VAC, 8A), or
  - 5 SPST relays (250 VAC, 8A) and 4 triacs (24 VAC,0.5A),

Choice of Programming Environment

The FX14 supports two methods of application programming: configurable and fully programmable.

- Configurable: With the FX Builder Express Tool, you can select from a library of standard applications that were specifically developed for the FX14 and configure them to meet your specific control requirements using graphical plug-ins.
- Programmable: With the FX Builder Tool, you can develop a completely unique, custom control application for the FX14. The FX Builder Tool can also be used to open up and customize any of the applications in our standards library.

As a result, the FX14 can be adapted to meet most control requirements.

FX14 FIELD CONTROLLER

FACILITY EXPLORER

Onboard Scheduling and Alarming

You have greater application flexibility with onboard scheduling and alarm generation. The FX14 includes an embedded real-time clock that enables time scheduling of start/stop commands and setpoint changes to the control system. In addition, the FX14 can be configured to generate time-stamped alarms based on system or application events. It supports several methods for users to access the schedule and alarm information, depending on which optional accessories are selected.

Optional User Interfaces

The FX14 supports optional user interfaces so you can easily monitor and adjust control points. Two styles of user interfaces are available: Integral or Remote.

The Integral User Interface includes a 2 line, 4 character LCD display screen, 18 graphical status icons and 4 pushbuttons. The LCD's background color can be configured blue or red to indicate an alarm or other special condition. The Integral User Interface is built into the FX14 packaging for direct, onboard access.

The remote Medium User Interface (MUI) includes a 4 line, 20 character LCD display screen, 10 discrete status LEDs, and 6 pushbuttons. You can mount it nearby in a panel or remotely on a wall.

These user interfaces are completely customizable to format the displayed information, structure their navigation, and assign passwords and access rights as desired.

Modular Networking

The FX14's performance is expanded by modular networking capability. Use it as a standalone controller, or it can be fitted with an optional network communication card, to integrate in an N2-based or LonWorks®-based building automation system. Modular networking is a cost effective method to provide either standalone or networked capabilities.

Optional Dial Out SMS Service

When used as a standalone controller, the FX14 can support an optional RS-232 communications card using a GSM modem for a remote dial out connection. This gives you the ability to send SMS (short message service) messages to report and notify alarms and events.

Application Examples

- Unit Ventilator Controller
- Heat Pump Controller
- Air Handling Unit Controller
- Refrigeration Unit Controller, including control of multi-compressor and scroll compressors

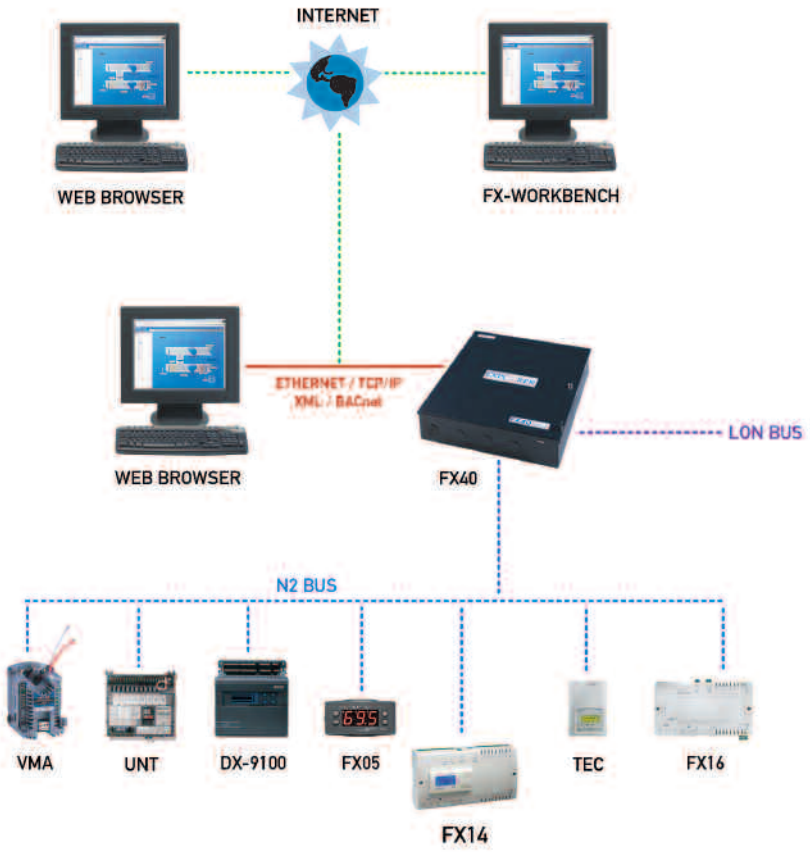

LonWorks® is a registered trademark of Echelon Corporation

JOHNSON CONTROLS

© 2006 Johnson Controls, Inc.

P.O. Box 423, Milwaukee, WI 53201

Printed in USA PUBL-3941

FX15 FIELD CONTROLLER

FACILITY EXPLORER
BY JOHNSON CONTROLS

The Facility Explorer FX15 Field Controller offers a powerful and flexible solution for a wide variety of HVAC and refrigeration control requirements. The FX15 is designed to provide direct, closed loop control over mechanical HVAC or refrigeration equipment, either as a standalone device or as a part of a larger, networked control system. Both indoor and outdoor temperature range models are available, making it suitable for mounting in a control panel or inside the mechanical equipment.

Supported Inputs/Outputs

Up to 27 physical inputs and outputs can be directly connected to the FX15, including:

- 6 Analog Inputs: active or passive, software configurable
- 8 Digital Inputs: voltage free contacts
- 4 Analog Outputs: 0-10 V
- 9 Digital Outputs:
  - 4 SPST relays (250 VAC, 8A) and 5 SPST relays (250 VAC, 5A), or
  - 4 SPST relays (250 VAC, 8A) and 5 triacs (24 VAC, 0.5A),

Up to 64 additional inputs and outputs can be added to the FX15 by connecting XT/XP expansion I/O modules. This scalable architecture allows the FX15 to be used cost effectively on projects of various sizes and complexity.

Choice of Programming Environment

The FX15 supports two methods of application programming: configurable and fully programmable.

- Configurable: With the FX Builder Express Tool, you can select from a library of standard applications that were specifically developed for the FX15 and configure them to meet your specific control requirements using graphical plug-ins.

FX15 FIELD CONTROLLER

FACILITY EXPLORER

- Programmable: With the FX Builder Tool, you can develop a completely unique, custom control application for the FX15. The FX Builder Tool can also be used to open up and customize any of the applications in our standards library.

As a result, the FX15 can be adapted to meet most control requirements.

Optional User Interfaces

The FX15 supports an optional user interface, allowing the FX15's control points to be easily monitored and/or adjusted. Two styles of user interfaces are available: Medium and Large.

The Medium User Interface includes a 4x20 LCD display screen, 10 discrete status LEDs, and 6 pushbuttons. The Medium User Interface can be built into the FX15's packaging, mounted nearby in a panel, or mounted remotely on a wall.

The Large User Interface includes a 4x20 LCD display screen, 66 discrete status LEDs, and 28 pushbuttons. It can be remotely mounted on a wall or in a panel, or it can be used as a handheld user access device.

Each user interface is completely customizable, providing the ability to format the displayed information, structure its navigation, and assign passwords and access rights as desired.

Modular Networking

The FX15's usefulness is expanded by means of its modular networking capability. The FX15 can be used as a standalone controller, or it can be fitted with an optional network communication card, allowing it to be used in an N2-based or LonWorks®-based building automation system. Modular networking makes for a cost effective method to provide either standalone or networked capabilities.

Application Examples

- Air Handling Unit Controller
- Unit Ventilator Controller
- Packaged Rooftop Controller
- Heat Pump Controller
- Chiller Controller

Specifications:

General

- 24 VAC +/- 15%
- 15 VA

Ambient Operating Conditions

- -4° to 122° F (-20° to 50° C)
- 10-95% RH (non condensing)
- Expanded temperature range for outdoor applications also available

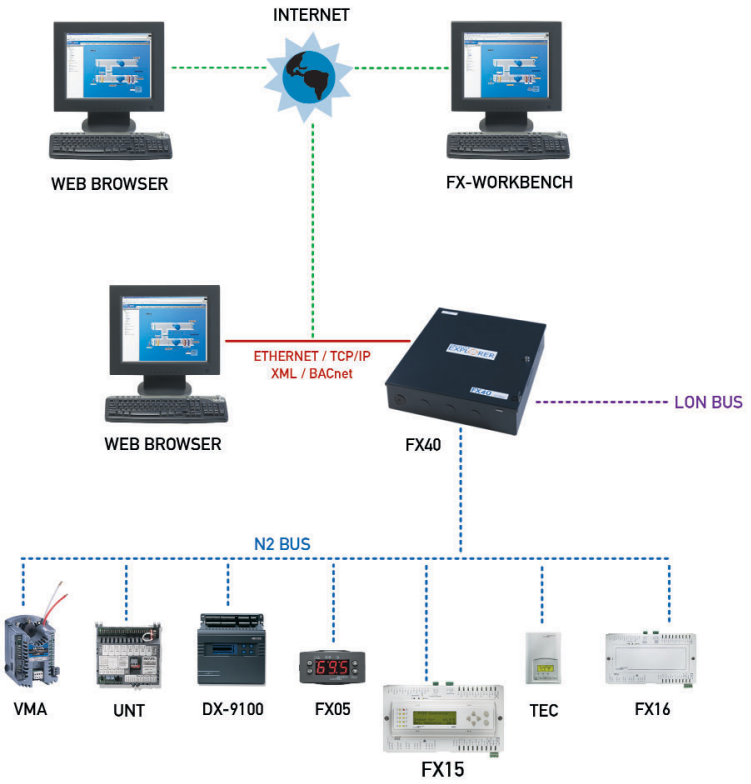

LonWorks® is a registered trademark of Echelon Corporation

JOHNSON CONTROLS

© 2005 Johnson Controls, Inc.

P.O. Box 423, Milwaukee, WI 53201

Printed in USA PUBL-3896

FX16 MASTER CONTROLLER

FACILITY EXPLORER
BY JOHNSON CONTROLS

The Facility Explorer FX16 Master Controller offers a powerful and flexible solution for a wide variety of HVAC and refrigeration control requirements. The FX16 is designed to provide direct, closed loop control over mechanical HVAC or refrigeration equipment, either as a standalone device or as a part of a larger, networked control system. Both indoor and outdoor temperature range models are available, making it suitable for mounting in a control panel or inside the mechanical equipment.

The FX16 also features a distributed application architecture, onboard scheduling, alarming, and trending, and optional remote communication capabilities—all of which make it suited to controlling very complex control systems.

Supported Inputs/Outputs

Up to 27 physical inputs and outputs can be directly connected to the FX16, including:

- 6 Analog Inputs: active or passive, software configurable
- 8 Digital Inputs: voltage free contacts
- 4 Analog Outputs: 0-10 V
- 9 Digital Outputs:
  - 4 SPST relays (250 VAC, 8A) and 5 SPST relays (250 VAC, 5A), or
  - 4 SPST relays (250 VAC, 8A) and 5 triacs (24 VAC, 0.5A),

Up to 64 additional inputs and outputs can be added to the FX16 by connecting XT/XP expansion I/O modules. This scalability allows the FX16 to be used cost effectively on projects of various sizes and complexity.

FX16 MASTER CONTROLLER

Distributed Application Architecture

In addition, the FX16 Master Controller can manage a small network of FX-class devices (e.g. FX05, FX15) in a distributed application environment. In this distributed architecture, each FX-class slave device operates independently, and each provides its information to the FX16 Master Controller. The FX16 ensures proper system-wide operation by polling each device for information, refreshing shared network variables, and synchronizing the entire distributed application. This makes the FX16 and its connected devices perfectly suited for applications where the control components are located in different areas of the building.

Choice of Programming Environment

The FX16 supports two methods of application programming: configurable and fully programmable.

- Configurable: With the FX Builder Express Tool, you can select from a library of standard applications that were specifically developed for the FX16 and configure them to meet your specific control requirements using graphical plug-ins.
- Programmable: With the FX Builder Tool, you can develop a completely unique, custom control application for the FX16. The FX Builder Tool can also be used to open up and customize any of the applications in our standards library.

As a result, the FX16 can be adapted to meet most control requirements.

Onboard Scheduling, Alarming and Trending

The FX16's application possibilities are expanded due to its support of onboard scheduling, alarm generation, and trend logging. The FX16 includes an embedded real time clock that enables the time scheduling of start/stop commands and setpoint changes to the control system. In addition, the FX16 can be configured to generate time-stamped alarms based on system or application events and to trend control points over a period of time. The FX16 supports several different methods for users to access the schedule, alarm and trend information, depending on which optional accessories are selected.

Optional User Interfaces

The FX16 supports an optional user interface, which allows for easy, on-site monitoring and adjustment of the FX16's control points as well as alarm indication and acknowledgement. Two styles of user interfaces are available: Medium and Large.

The Medium User Interface includes a 4x20 LCD display screen, 10 discrete status LEDs, and 6 pushbuttons. The Medium User Interface can be mounted nearby in a panel or mounted remotely on a wall.

The Large User Interface includes a 4x20 LCD display screen, 66 discrete status LEDs, and 28 pushbuttons. It can be remotely mounted on a wall or in a panel, or it can be used as a handheld user access device.

Each user interface is completely customizable, providing the ability to format the displayed information, structure its navigation, and assign passwords and access rights as desired.

FACILITY EXPLORER

Modular Networking

The FX16's usefulness is expanded by means of its modular networking capability. The FX16 can be used as a standalone controller, or it can be fitted with an optional network communication card, allowing it to be used in an N2-based or LonWorks®-based building automation system. Modular networking makes for a cost effective method to provide either standalone or networked capabilities.

Optional Dial In/Dial Out Communications

When used as a standalone controller, the FX16 also supports an optional RS-232 communication card, allowing an external modem to be connected for a remote dial in/dial out connection. The FX16 features an embedded web server allowing a user to remotely dial into the FX16 to view and adjust its control points, access trend logs, and monitor alarms–all with a standard web browser. The FX16 also features an embedded email/fax/SMS server enabling it to dial out alarm and event notifications and trend log summaries.

Application Examples

- Multizone Air Handling Unit Controller
- Commercial Zoning (Packaged Rooftop Unit Controller and Zone Manager)
- Chilled Water Plant Controller

Specifications:

General

- 24 VAC +/- 15%
- 15 VA

Ambient Operating Conditions

- -4° to 122° F (-20° to 50° C)
- 10-95% RH (non condensing)
- Expanded temperature range for outdoor applications also available

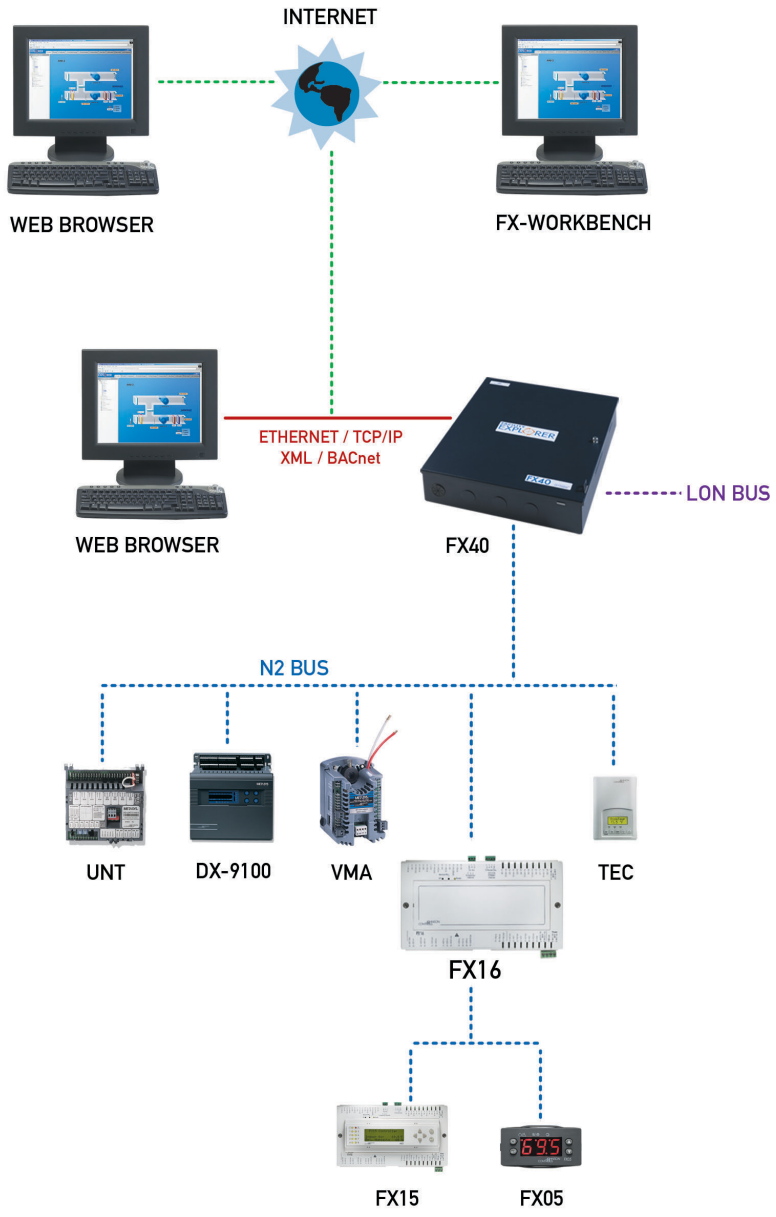

LonWorks® is a registered trademark of Echelon Corporation

JOHNSON CONTROLS

© 2005 Johnson Controls, Inc.

P.O. Box 423, Milwaukee, WI 53201

Printed in USA PUBL-3899

FX40 SUPERVISORY CONTROLLER

FACILITY EXPLORER
BY JOHNSON CONTROLS

The Facility Explorer FX40 Supervisory Controller offers a powerful and flexible supervisory control solution for a wide variety of system control requirements. The FX40 is designed to supervise a network of field controllers to form a complete building automation system, and to allow intranet/internet access to the system via a standard web browser.

Supported Inputs/Outputs

Up to l0 inputs and outputs can be directly connected to the FX40, including:

Four Digital Outputs

- All form C, SPDT 24 VAC/DC @2A relays
- LED indication

Six universal inputs, which can be any of the following types:

- 10k NTC
- 0-10V
- 4-20 mA
- Dry contact binary input

Communication Interfaces

The FX40 features multiple communication interfaces with support for the most popular HVAC field device protocols. Included with the FX40 are the following communication ports:

- 1 Ethernet port (10/100 Mb) supporting
  - TCP/IP
  - HTTP
  - BACnet® IP/Ethernet
- 1 RS-485 port with N2 driver
- 1 LonWorks® FTT-10A port
- 1 RS-232 port or optional internal modem (56k baud autodial/autoanswer)

FX40 SUPERVISORY CONTROLLER

FACILITY EXPLORER

Supported Device Types

The FX40 supports up to 100 devices on its communication trunks, including any combination of the following supported device types:

- N2
  - FX field devices fitted with N2 communication cards
  - N2 ASCs (VMA, DX-9100, UNT, VAV, AHU)
  - N2 compatible devices (VND)
- LonWorks
  - FX field devices fitted with LonWorks communication cards
  - Third party LonMark® compliant devices
- BACnet IP/Ethernet
  - N30
  - Third party BACnet devices compatible with FX40's PICs statement

Full Suite of Building Automation and Control Features

The FX40 features a comprehensive suite of building automation and control features including the following:

- Event/occupancy scheduling
- Trending
- Alarming
- Totalization
- Energy management
- Network wide data sharing
- User access with password protection
- Rich, graphical representation of system information
- Time synchronization
- Custom control

FX Workbench

The FX40 can be easily engineered using FX Workbench. FX Workbench can operate as a standalone application on a PC, or it can be served up by the FX40 and be accessed using a standard Web browser. FX Workbench features online automatic device discovery for LonWorks and BACnet devices, and an assisted import feature for N2 devices.

The FX Workbench includes several labor saving features to assist the engineering of the system, when using standard Facility Explorer applications, including:

- Automatic linking of the field devices' occupancy point to the FX40's scheduler
- Using check boxes to enable/disable point extensions
- Automatic system graphic creation and linking to point information.

Specifications:

General

- 120 VAC, 50/60 Hz,
- 25 VA

Ambient Operating Conditions

- 32° to 122° F (0° to 50° C)
- 5-95% RH (non condensing)

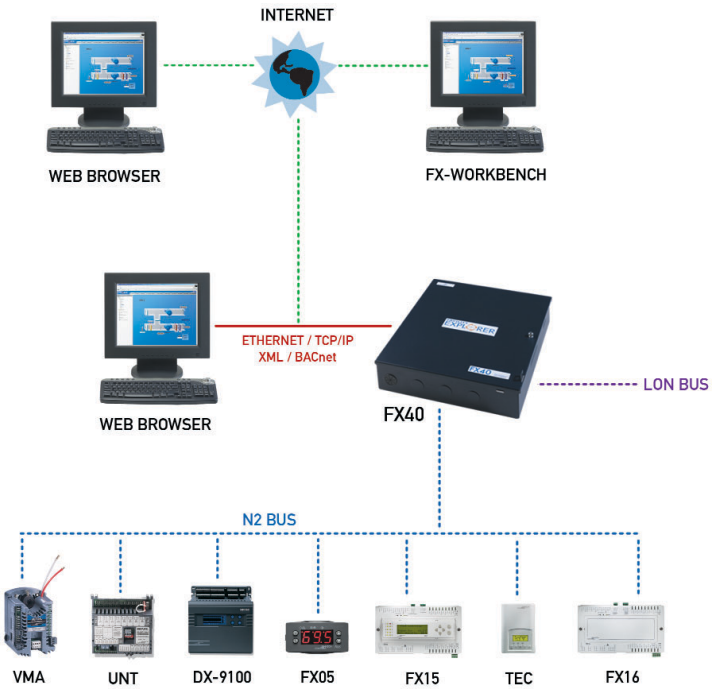

LonWorks® and LonMark®are registered trademarks of Echelon Corporation
BACnet® is a registered trademark of American Society of Heating, Refrigerating and Air Conditioning Engineers (ASHRAE)
Niagara Framework is a registered trademark of Tridium, Inc.

Powered by niagara AX FRAMEWORK™

JOHNSON CONTROLS

© 2005 Johnson Controls, Inc.

P.O. Box 423, Milwaukee, WI 53201

Printed in USA PUBL-3895

FX TOOLS

FACILITY EXPLORER
BY JOHNSON CONTROLS

FX Tools is a Windows-based software package for engineering, selecting, configuring, downloading, and commissioning HVAC and refrigeration applications for the Facility Explorer field controllers, master controllers, and master displays. Two versions are available: FX Tools Pro and FX Tools Express.

FX Builder

FX Builder is the fully programmable, application development tool and is included in the FX Tools Pro suite. It provides a user friendly, object oriented, graphical means of programming and configuring control applications, including:

- Selection of the target device
- Assignment of inputs and outputs
- Creation of control logic and sequences of operation
- Setup of schedules, alarms, events, and trends
- Format and navigation of the user interface
- Design of the web page
- Configuration of communication services
- Definition of the network profile

FX Builder provides full programmability. It features a comprehensive and well-documented library of control objects that are ideally suited for HVAC and refrigeration applications including:

- On/off controller
- PID controller
- Programmable Logic Controller
- Logic/math objects
- Psychometric object

FX TOOLS

FACILITY EXPLORER

FX Builder incorporates several features that help save application development time. Sections of application code can be saved, allowing developers to create their own frequently-used assemblies and re-use them on future projects with similar control requirements. Also, once an application has been developed and completed, FX Builder automatically exports the N2 and LonWorks® network resource files, and it creates a wiring diagram which shows the external electrical connections needed to be made to the controller in the field.

FX Builder Express

FX Builder Express is an application selector and configuration tool included in both FX Tools Pro and FX Tools Express software suites. It includes a library of frequently-used control applications developed specifically for Facility Explorer field controllers. FX Builder Express also includes graphical plug-ins for each standard control application, allowing the user to easily configure them to specific control requirements.

The plug-ins are designed to assist the user in the proper configuration of the application, by

- Providing a link to the application documentation
- Presenting graphical feedback of the configuration options selected
- Disabling configuration options which are not applicable
- Red flagging improper configuration combinations

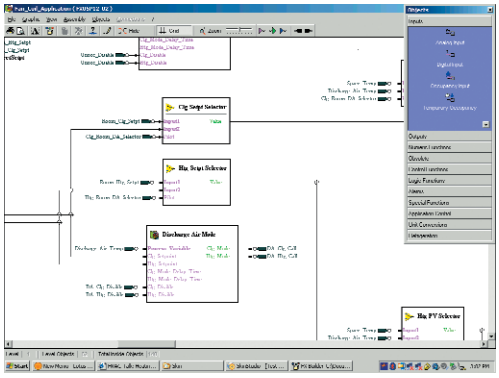

FX CommPro

FX CommPro is the tool used for downloading and commissioning Facility Explorer field controllers. FX CommPro is included in both FX Tools Pro and FX Tools Express. FX CommPro can connect to Facility Explorer field devices either via N2 or LonWorks and provides the following online functions:

- Downloading control applications
- Read/write of device status
- Read/write network variables
- Read/write of configuration properties
- Modifying, saving, and re-using configuration properties
- Reading device specific data

FX Loader

FX Loader is a simple and straightforward tool used to download control applications to Facility Explorer field controllers. FX Loader is included in FX Tools Pro. FX Loader can connect to Facility Explorer field devices either via N2 or LonWorks. In addition to downloading control applications, FX Loader can also be used to download firmware updates to Facility Explorer field controllers.

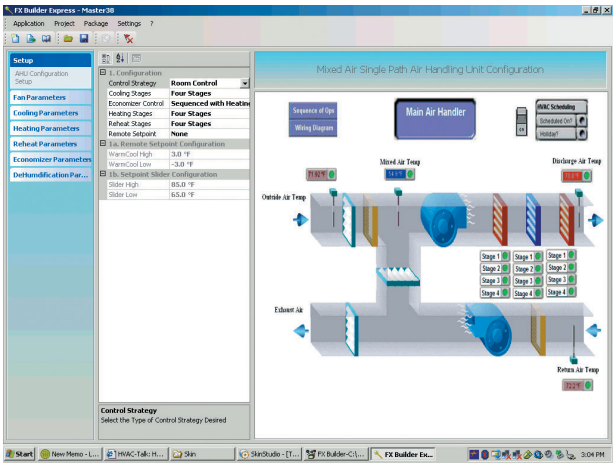

LonWorks® is a registered trademark of Echelon Corporation

JOHNSON CONTROLS

© 2005 Johnson Controls, Inc.

P.O. Box 423, Milwaukee, WI 53201

Printed in USA PUBL-3898

COMMERCIAL ZONING PACKAGE

FACILITY EXPLORER
BY JOHNSON CONTROLS

The Facility Explorer Commercial Zoning Package is a complete, turnkey control system used to improve occupant comfort in a building (or section of a building) that is conditioned with a packaged rooftop HVAC unit. It accomplishes this by varying the amount of conditioned air delivered to individual zones and by intelligently cycling the rooftop unit's heating and cooling stages to best satisfy all the zone demands.

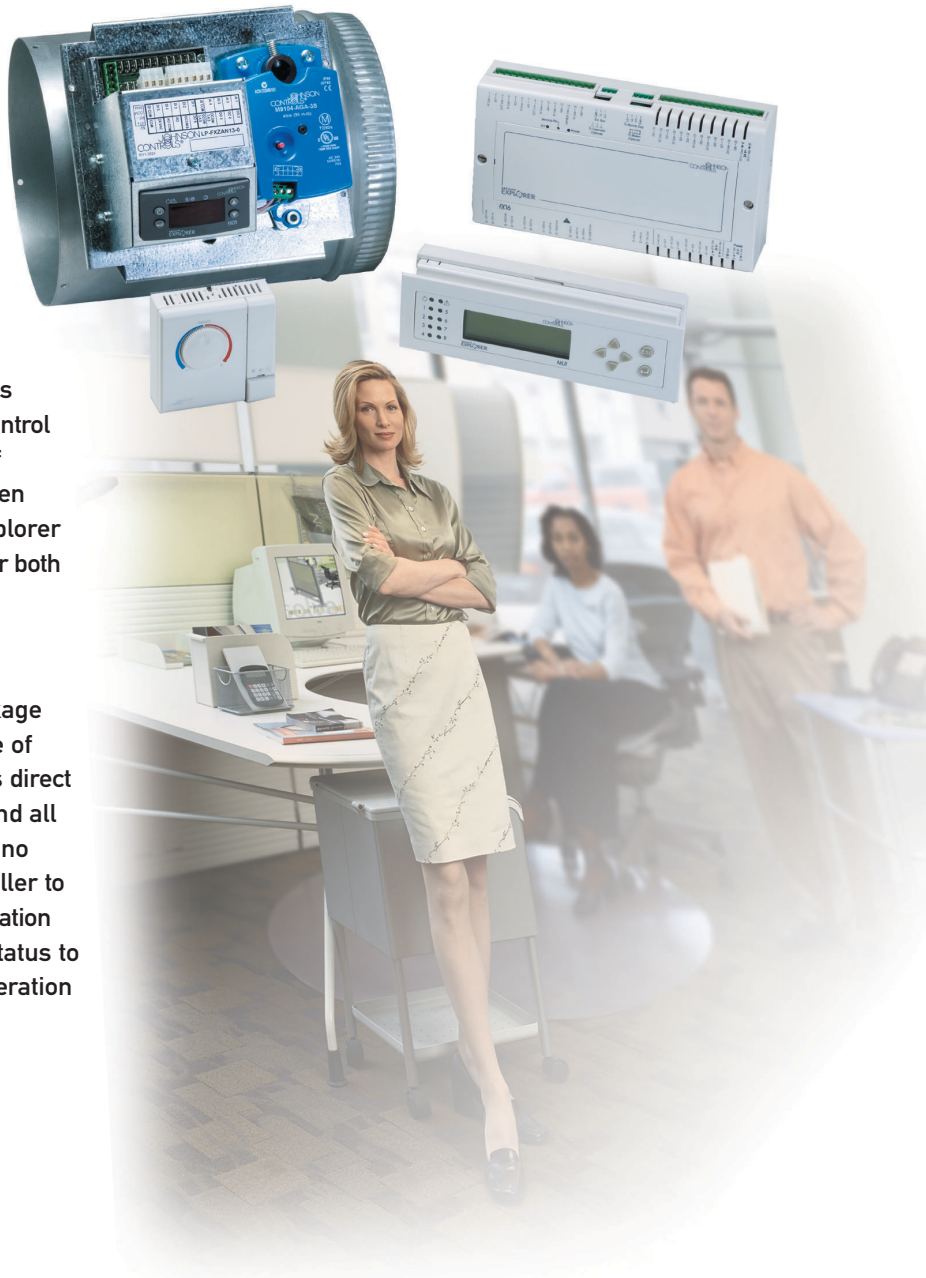

Manufacturer Independent

The Facility Explorer Commercial Zoning Package is designed to work with any standard, packaged HVAC equipment, regardless of manufacturer. This allows you to apply this control package to equipment provided by a variety of suppliers or to equipment that has already been installed. This flexibility makes the Facility Explorer Commercial Zoning Package perfectly suited for both new and retrofit installations.

Affordable Intelligence

The Facility Explorer Commercial Zoning Package utilizes the distributed application architecture of the FX16 Master Controller. This feature allows direct communications to occur between the FX16 and all the zone controllers. This means that there is no need for a traditional supervisory class controller to manage the data sharing. This direct communication flow allows the FX16 to monitor each zone's status to intelligently determine the proper mode of operation for the rooftop unit.

COMMERCIAL ZONING PACKAGE

FACILITY EXPLORER

Easy Installation

Several pieces of the Facility Explorer Commercial Zoning Package can be ordered pre-assembled from the factory to simplify installation:

- Zone Controller and Actuator Assembly (FXZAN)
  - The FX05 Field Controller is combined with an M9104AGA non-spring return actuator and an electrical termination wiring block, all in one packaged assembly
  - Perfect for retrofit installations where the zone damper is already installed
- Zone Controller, Actuator, and Damper Assembly
  - FXZAN Zone Controller and Actuator Assembly is combined with a round or rectangular zone damper
  - Perfect for new installations or for retrofit installations where the zone damper has not yet been installed
- Bypass Damper and Actuator Assembly
  - A round or rectangular bypass damper is combined with an M910xHGA non-spring return actuator
- FX16 Master Controller with Pre-Downloaded Zoning Application
  - FX16 Master Controller can be ordered with the commercial zoning application pre-downloaded
  - Once installed, the FX16 takes care of downloading the corresponding parts of the zoning application to each of the zone controllers
  - Eliminates the downloading steps from the field installation and startup
  - This provides the possibility (with an onsite Medium User Interface) to download, configure and commission the entire system, including the rooftop, bypass, and all zone controllers without any software tool

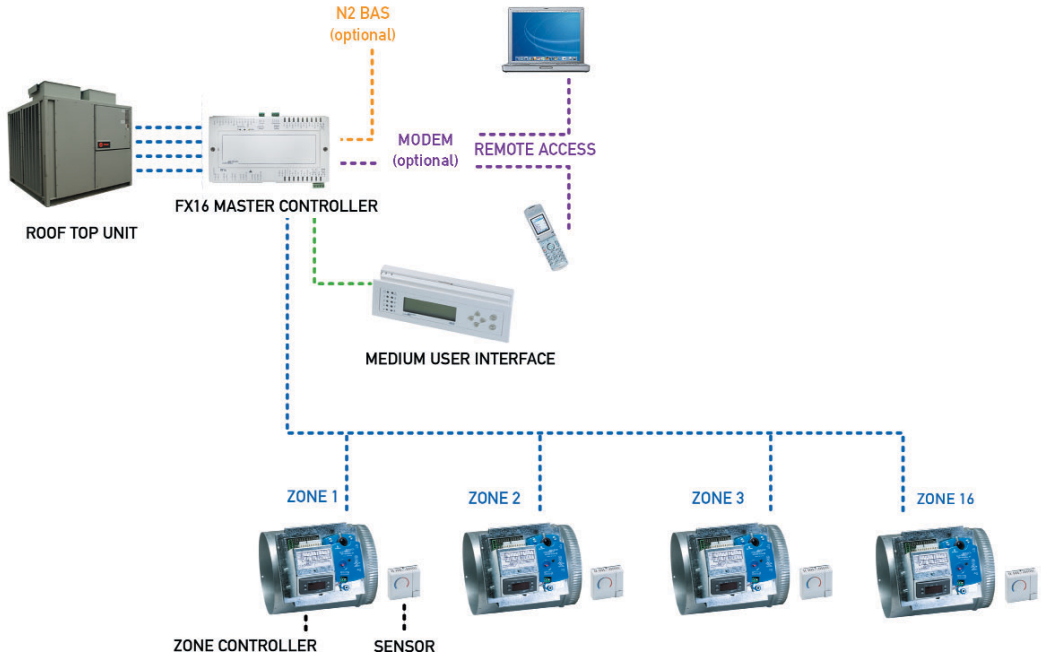

JOHNSON CONTROLS

© 2005 Johnson Controls, Inc.

P.O. Box 423, Milwaukee, WI 53201

Printed in USA PUBL-3894

FX SERVER

FACILITY EXPLORER
BY JOHNSON CONTROLS

The Facility Explorer FX Server expands the capabilities of the FX40 Supevisor by providing additional storage capacity and the ability to tie multiple FX40s together over the local Ethernet or the internet. FX Server is a software package that can be loaded onto a variety of third party PC or server hardware platforms, providing flexibility and options when designing the system.

FX SERVER

FACILITY EXPLORER

Expanding FX40 Applications

For projects requiring more data storage capacity, more concurrent users, and/or more graphics than a single FX40 can provide, the FX Server can be used to provide:

- Additional data (alarm, trend) storage capability
- Support for an additional number of concurrent users
- Increased capacity for graphical user interface

For a larger project, one that requires more than the 100 device capacity of a single FX40, the FX Server can be used to tie multiple FX40s together over Ethernet to provide:

- A single seat user interface for all interconnected FX40s
- A master scheduler for all of the interconnected FX40s
- A central alarm and trend history repository for all interconnected FX40s

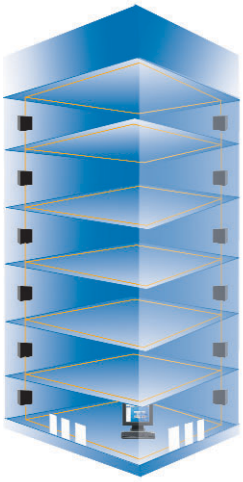

Single Building Installation

For projects consisting of multiple buildings, each run by an FX40 (e.g. school district, bank branches), the FX Server can be used to tie these FX40s together over the internet to provide:

- A single seat user interface for all interconnected FX40s
- A master scheduler for all of the interconnected FX40s
- A central alarm and trend history repository for all interconnected FX40s

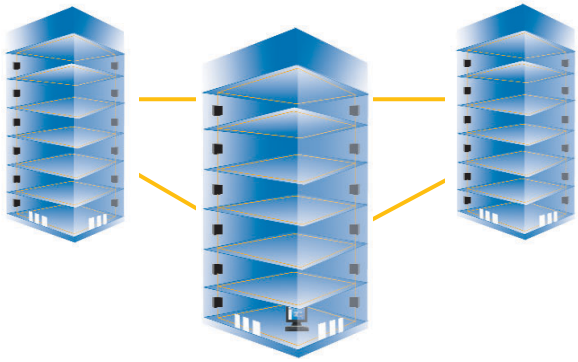

Multiple Building Installation

System Requirements

- Each FX40 must be licensed with FX Enterprise Connectivity Station Pack

PC Platform

- Intel Pentium IV, 1 GHz or higher
- Windows NT 4.0 with Service Pack 4.0 or higher or Windows 2000 or Windows XP Professional
- Internet Explorer 5.0 or later or Netscape Communicator 4.5 or later
- 512 Mb minimum memory
- 1 Gb minimum hard drive
- Video card capable of displaying 1024 x 768 pixel resolution
- Ethernet adapter (10/100 Mb) with RJ-45 connector

JOHNSON CONTROLS

© 2005 Johnson Controls, Inc.

P.O. Box 423, Milwaukee, WI 53201

Printed in USA PUBL-3900

TEC2000 SERIES NETWORK THERMOSTATS

FACILITY EXPLORER
BY JOHNSON CONTROLS

Network Configurable Thermostats

The TEC2000 Series Network Configurable Thermostats control a variety of commercial HVAC equipment. The TEC2000 Series features include a backlit Liquid Crystal Display (LCD), easy-to-use five button interface, and N2 or LonWorks® network interface. The network interface supports remote programming and monitoring, enabling each thermostat to be easily customized for the most efficient operation. From the thermostat or a supervisory controller, the user can easily adjust heating or cooling setpoints, view the room or outside air temperatures, select mode of operation (Day/Night) and much more.

TEC2x0x-2 Series

The TEC2x0x-2 Series staged controllers can be used with rooftop units (with and without economizers), heat pumps, and single and multi-stage heating/cooling equipment.

TEC2xx5, TEC2xx6 and TEC2xx7 Series

The TEC2xx5, TEC2xx6 and TEC2xx7 Series controllers provide single and dual outputs offering On/Off, Floating or Proportional control and optional 1, 2 or 3-Speed Fan control for two or four-pipe systems such as cabinet unit heaters, perimeter heat, fan coils, zoning equipment and more.

- N2 and LonWorks Network Open Communication
- On/Off, Floating or Proportional 0 to 10 VDC Control
- Fan Control
- Override Interface Key
- Simple Setpoint Adjustment
- Configurable Binary and Universal Inputs
- Over 20 Additional Configurable Parameters

TEC2000 SERIES NETWORK THERMOSTATS

FACILITY EXPLORER

PRODUCT CODE	CONTROL	FAN CONTROL	MODEL TYPE	APPLICATION
TEC2x45-2	One Output Proportional 0 to 10 VDC	One-Speed	Commercial	Commercial Two-pipe equipment, cabinet unit heaters, and perimeter heating/cooling
TEC2x16-2	Two Outputs On/Off	1, 2 or 3-Speed	Commercial	Two or Four-pipe fan coil equipment
TEC2x26-2	Two Outputs On/Off or Floating			
TEC2x46-2	Two Outputs Proportional			
TEC2x16H-2	Two Outputs On/Off		Hotel-Resort	
TEC2x26H-2	Two Outputs On/Off or Floating			
TEC2x46H-2	Two Outputs Proportional			
TEC2x27-2	Two Outputs On/Off or Floating	None	Commercial	Two or Four-pipe equipment, hydronic reheat valve control, and pressure dependent VAV with or without local reheat
TEC2x47-2	Two Outputs Proportional			
TEC2x01-2	Single Stage	On, Off or Auto		Fan Coil Unit, Unit Heaters, and Single-Stage Packaged Heating/Cooling Equipment
TEC2x02-2	Heat Pump			Heat Pump with up to 3 heating/ 2 Cooling Stages
TEC2x03-2	Multi Stage			Multi-Staged Packaged Heating/ Cooling Stages
TEC2x04-2	Economizer			Packaged Rooftop Units with Economizers

TEC2x45-2

TEC2xx6-2

TEC2xx7-2

Note: x = "1" for N2 open communication
x = "2" for LonWorks® open communication

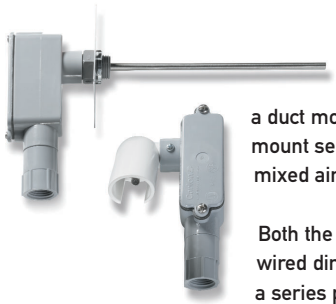

Remote outdoor air sensors are available in an outdoor air shield (SEN-600-2) or in a duct mount configuration (SEN-600-3). The duct mount sensor is available for remote sensing of mixed air or discharge temperatures.

Both the outdoor air and duct mount sensors are wired directly to the thermostat and can be wired in a series parallel arrangement for averaging.

Code Number	Description
SEN-600-1	Remote indoor temperature sensor
SEN-600-2	Outdoor air temperature sensor
SEN-600-3	Duct mount temperature sensor
SEN-600-4	Remote indoor temperature sensor with occupancy override button and LED

Remote indoor air sensors are available in a sensing only model (SEN-600-1) or with an occupancy status Light-Emitting Diode (LED) and occupancy override button (SEN-600-4).

LonWorks® is a registered trademark of Echelon Corporation

JOHNSON CONTROLS

© 2005 Johnson Controls, Inc.

P.O. Box 423, Milwaukee, WI 53201

Printed in USA PUBL-3901

B2...VS Series, 2-Way, Ball Valve
Bronze Body, Stainless Steel Ball and Stem

- **Live-load packing set**
- **Stainless steel ball & stem**
- **Blow-out proof stem design**

Application

This valve is typically used in air handling units on heating or cooling coils, and fan coil unit heating or cooling coils. Some other common applications include Unit Ventilators, VAV Box re-heat coils and bypass loops. This valve is suitable for use in a hydronic system with variable flow.

This valve is designed with MFT functionality which facilitates the use of various control input.

- Up to 35 psi steam
- 1/2" - 600 PSIG WOG, Cold Non-Shock.
- Federal Specification: WW-V-35C,Type II
  Composition: BZ
  Style: 3

Technical Data	
Media	Chilled or hot water, glycol, 35# steam
Flow Characteristic	Modified equal percentage
Action	90° rotation valve open CW, valve closed CCW
Sizes	½", ¾", 1", 1¼", 1½", 2", 2½", 3"
Type of end fitting	SAE NPT (Female Connections)
Materials:	
1 Stem Packing	Reinforced PTFE
2 Stem Bearing	Reinforced PTFE
3 Ball	316 Stainless Steel
4 Seat (x2)	Reinforced PTFE w/ Durafill
5 Retainer	B16 (¾" - 1") Brass B584 (1¼" - 3") Brass
6 Gland	B16 Brass
7 Stem	316 Stainless Steel
8 Jam Nut	Stainless Steel
9 Body Seal	PTFE (1-1/4" to 3")
10 Body	B584-C84400 Bronze

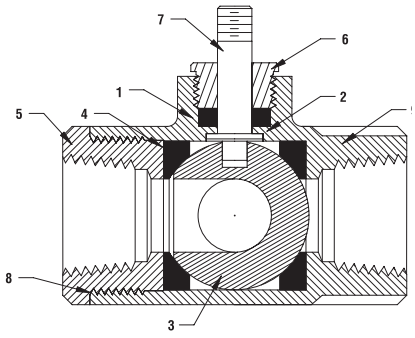

Pressure rating	600 psig WOG
Media temp. range	-22°F to 280°F (-30°C to 138°C)
Close-off pressure	600 psig @ 100°F
Maximum differential pressure (ΔP)	<600 psig

	Valve Nominal Size		Type	Suitable Return Actuators	
C_v	Inches	DN [mm]	2-way NPT	Spring	Non-Spring
1	½	15	B212VS	LF Series	LM Series / SY Series
2	½	15	B213VS		
4	½	15	B214VS		
15	½	15	B215VS		
30	¾	20	B219VS	NF	NM / SY Series
51	¾	20	B220VS		
43	1	25	B224VS	AF Series	AM Series / SY Series
68	1	25	B225VS		
48	1¼	32	B232VS		
84	1½	40	B239VS		
177	1½	40	B240VS		GM Series / SY Series
108	2	50	B249VS		
389	2	50	B250VS		
503	2½	65	B265VS		
370	3	80	B280VS		

Flow Patterns

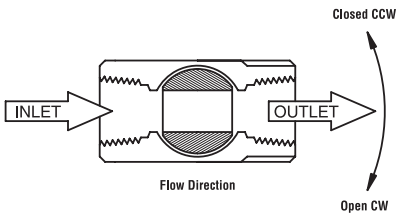

K20951 - 10/08 - Subject to change. © Belimo Aircontrols (USA), Inc.

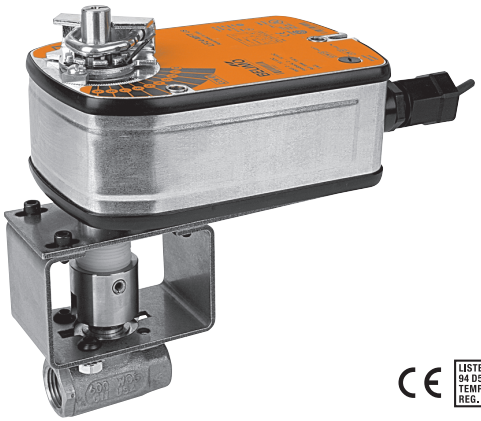

2 YEAR WARRANTY

Models

LF24 US	
LF24-S US	w/built-in Aux. Switch
LF120 US	
LF120-S US	w/built-in Aux. Switch

Technical Data	
Control	On/Off, Floating
Power supply LF24(-S) US	 24 VAC ± 20% 50/60 Hz 24 VDC ± 10%
LF120(-S) US	120 VAC ± 10% 50/60 Hz
Power consumption LF24(-S) US running holding LF120(-S) US running holding	 5 W 2.5 W 5.5 W 3.5 W
Transformer sizing LF24(-S) US LF120(-S) US	 7 VA, class 2 power source
Electrical connection (-S models have 2 cables)	½" conduit connector 3 ft [1m], 18 GA appliance cable
Electrical protection	120V actuators double insulated
Overload protection	electronic throughout rotation
Angle of rotation	95°
Spring return direction	reversible with CW/CCW mounting
Position indication	visual indicator 0° to 90°
Running time spring	<40 to 75 sec. (on-off) <25 sec. @-4°F to 122°F [-20°C to 50°C] <60 sec. @-22°F [-30°C]
Ambient temperature	-22° F to 122° F [-30° C to 50° C]
Housing	NEMA 2
Agency listings†	UL 873, CSA C22.2 No. 24 certified, CE
Quality standard	ISO 9001
Noise level	max. 62 dB(A)

LF...-S US	
Auxiliary switch	1 x SPDT, 6A (1.5A) @ 250 VAC, UL Listed, adjustable 0° to 95° (double insulated)

† Rated impulse voltage 800V (4kV for 120V model), Control pollution degree 3, Type of action 1.AA (1.AA.B for -S models)

Dimensions with 2-Way Valve

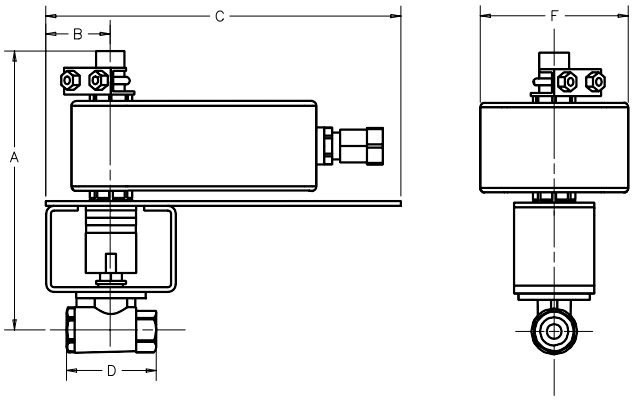

		Valve Nominal Size		Dimensions (Inches)				
Valve Body	COP	Inches	DN [mm]	A	B	C	D	F
B212VS	50	½"	15	6.75	2.00	6.75	2.25	4.00
B213VS	50	½"	15	6.75	2.00	6.75	2.25	4.00
B214VS	50	½"	15	6.75	2.00	6.75	2.25	4.00
B215VS	50	½"	15	6.70	2.00	8.00	2.25	6.25
B215VSS	1000	½"	15	6.70	2.00	8.00	2.25	6.25

Dimensions with 3-Way Valve

PAGE11

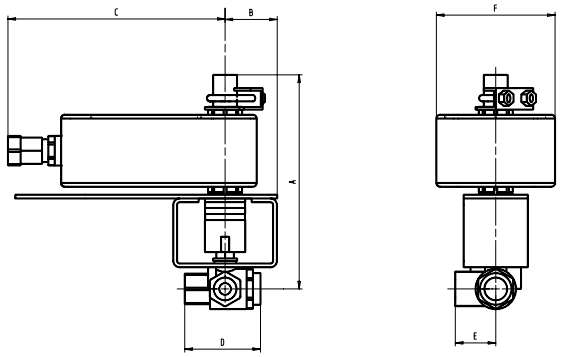

		Valve Nominal Size		Dimensions (Inches)					
Valve Body	COP	Inches	DN [mm]	A	B	C	D	E	F
B315VS	75	½"	15	6.50	2.00	8.00	2.30	1.25	3.86

K20951 - 10/08 - Subject to change. © Belimo Aircontrols (USA), Inc.

Wiring Diagrams

INSTALLATION NOTES

1 Provide overload protection and disconnect as required.

2 ***CAUTION** Equipment damage!*
Actuators may be connected in parallel.
Power consumption must be observed.

3 Actuator may also be powered by 24 VDC.

4 For end position indication, interlock control, fan startup, etc.,
LF24-S US and LF120-S US incorporates a built-in auxiliary switch:
1 x SPDT, 6A (1.5A) @ 250 VAC, UL listed, adjustable 0° to 95°.

APPLICATION NOTES

♦ Meets cULus or UL and CSA requirements without the need of an electrical ground connection.

***WARNING** Live Electrical Components!*
During installation, testing, servicing and troubleshooting of this product, it may be necessary to work with live electrical components. Have a qualified licensed electrician or other individual who has been properly trained in handling live electrical components perform these tasks. Failure to follow all electrical safety precautions when exposed to live electrical components could result in death or serious injury.

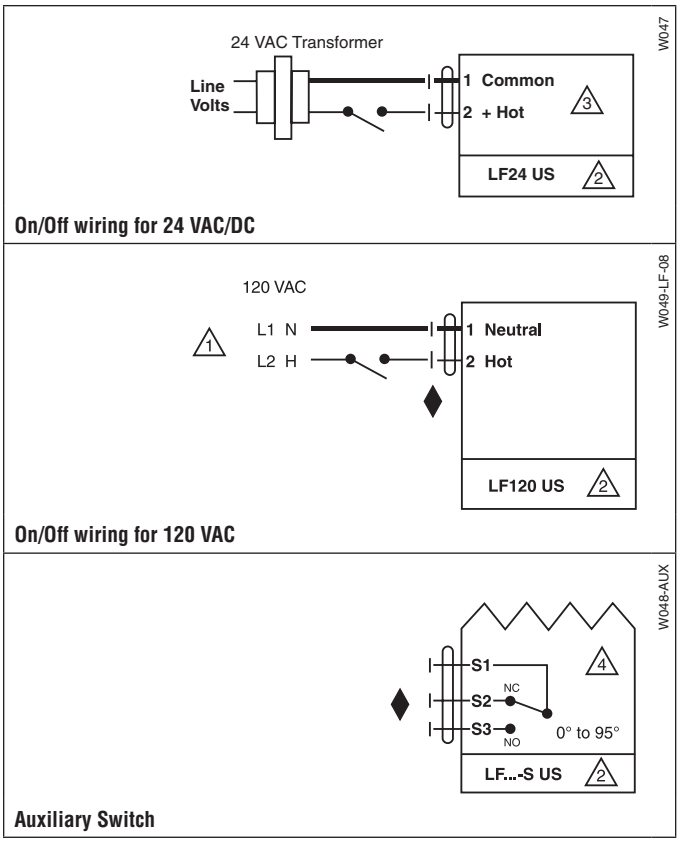

K20951 - 10/08 - Subject to change. © Belimo Aircontrols (USA), Inc.

VG1000 Series Forged Brass Ball Valves

Installation Instructions

Part No. 14-1201-5, Rev. P
Issued August 26, 2008
Supersedes March 17, 2008

Applications

The VG1000 Series Ball Valves are designed to regulate the flow of hot or chilled water (and for some models, low pressure steam) in response to the demand of a controller in Heating, Ventilating, and Air Conditioning (HVAC) systems.

IMPORTANT: The VG1000 Series Valves are intended to control saturated steam, hot water, and chilled water flow under normal equipment operating conditions. Where failure or malfunction of the VG1000 Series Valve could lead to personal injury or property damage to the controlled equipment or other property, additional precautions must be designed into the system. Incorporate and maintain other devices such as supervisory or alarm systems or safety or limit controls, intended to warn of or protect against failure or malfunction of the VG1000 Series Valve.

Installation

Install VG1000 Series Ball Valves with the actuator at or above the centerline of the horizontal piping, as shown in Figure 1.

IMPORTANT: In steam applications, install the valve with the stem horizontal to the piping. Failure to follow these guidelines may shorten the life of the actuator.

To minimize heat transfer in steam applications, wrap the valve and piping with insulation. Allow sufficient clearance to remove the actuator (as illustrated in the dimension drawings, Figure 6 through Figure 16).

When mounting the actuator in the field (before installation), use an adjustable wrench to manually rotate the valve stem several times. This rotation breaks the torque that may have built up during long-term storage.

For the valve to move in the proper direction, wire the input lines to the electric actuator correctly.

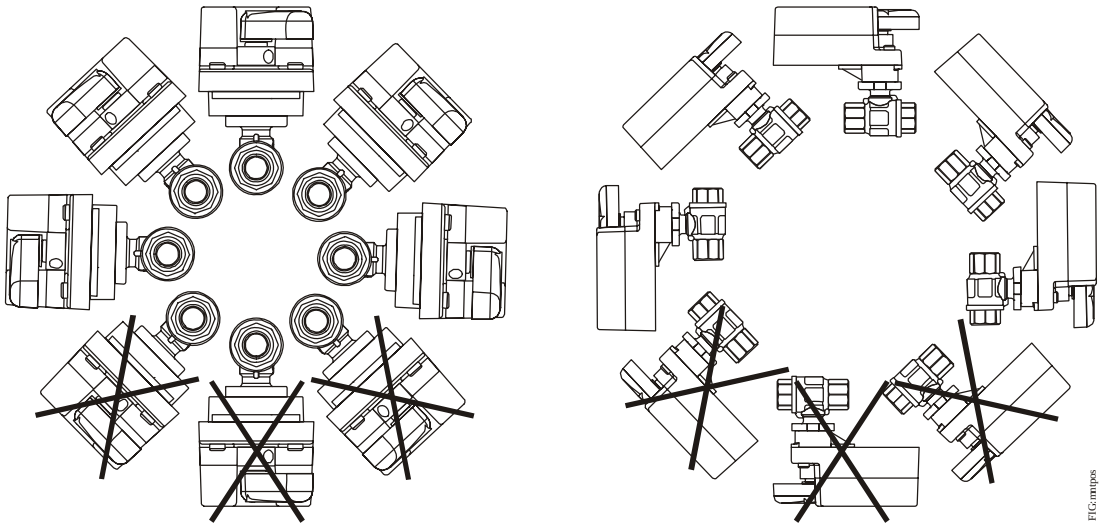

Figure 1: Mounting Positions for Chilled Water and Condensing Atmosphere Applications

Johnson Controls

IMPORTANT: Take care to prevent foreign material such as weld slag, thread burrs, metal chips, and scale from entering the piping system. This debris can damage or severely impede the operation of the valve by embedding itself in the seats, scoring the valve, and ultimately resulting in seat leakage. If the debris becomes embedded in the seats, subsequent flushing and filtering of the piping system with the valve installed does not remedy the problem.

For more detailed installation information about the specific equipment used, refer to the appropriate document from the following list:

- *VA9104-xGA-2S Series Electric Non-Spring Return Valve Actuators Installation Instructions (Part No. 14-1336-15)*
- *VA9104-xGA-3S Series Electric Non-Spring Return Valve Actuators Installation Instructions (Part No. 14-1336-23)*
- *M9102-AGA-2S and M9104-xGA-2S Series Electric Non-Spring Return Actuators Installation Instructions (Part No. 34-636-1220)*
- *M9102-AGA-3S and M9104-xGA-3S Series Electric Non-Spring Return Actuators Installation Instructions (Part No. 34-636-1433)*
- *M9106-xGx-2 Series Electric Non-Spring Return Actuators Installation Instructions (Part No. 34-636-1085)*
- *M9109 Series Electric Non-spring Return Actuators Installation Instructions (Part No. 34-636-1190)*
- *VA2202-xxx-2 Series Electric Spring Return Valve Actuators Installation Instructions (Part No. 14-1344-1)*
- *M2202-xxx-2 Series Electric Spring Return Actuators Installation Instructions (Part No. 34-1660-4)*
- *M9206-AGx-2S Series Floating Electric Spring Return Actuators Installation Instructions (Part No. 34-1280-238)*
- *M9206-Bxx-2S Series On/Off Electric Spring Return Actuators Installation Instructions (Part No. 34-1280-122)*
- *M9206-GGx-2S Series Proportional Electric Spring Return Actuators Installation Instructions (Part No. 34-1280-246)*
- *M9108, M9116, M9124, and M9132 Series Electric Non-Spring Return Actuators Installation Instructions (Part No. 34-636-399)*
- *M9210-AGx-3 Floating Electric Spring Return Actuators Installation Instructions (Part No. 34-636-1654)*
- *M9210-Bxx-3 On/Off Electric Spring Return Actuators Installation Instructions (Part No. 34-636-1638)*
- *M9210-GGx-3 Proportional Electric Spring Return Actuators Installation Instructions (Part No. 34-636-1662)*
- *M2000-500 Ball Valve Linkage Kit Installation Instructions (Part No. 14-1343-7)*
- *M9000-330 and M9000-340 Series Weather Shield Enclosures Installation Instructions (Part No. 14-1330-26)*
- *M9000-51x Series Valve Linkage Kits Installation Instructions (Part No. 14-1201-13)*
- *M9000-520 Ball Valve Linkage Kit Installation Instructions (Part No. 14-1297-5)*
- *M9000-550 Ball Valve Linkage Kit Installation Instructions (Part No. 34-636-1816)*

Note: To avoid excessive wear or drive time on the motor for VA9104, M9104, M9106, and M9109 AGx models, use a controller and/or software that provides a time-out function to remove the signal at the end of rotation (stall). The IGx and GGx models have an auto shutoff to avoid excessive wear or drive time on the motor.

On models with the flow-characterizing disk, the disk is located in Port A. Port A must be the inlet. On three-way models, use Port A as the coil inlet and Port B as the bypass inlet.

VG1841 and VG1845 Series three-way ball valves have a different port configuration from VG1644 Series three-way valves. See Figure 2, Figure 3, and Figure 4 for details.

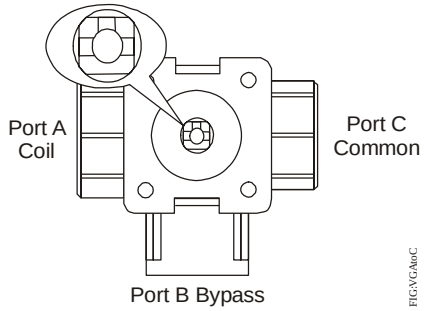

Figure 2: VG1841 or VG1845 Series Three-Way Ball Valve (Port A Connected to Port C)

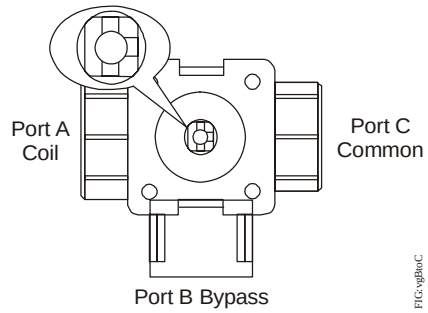

Figure 3: VG1841 or VG1845 Series Three-Way Ball Valve (Port B Connected to Port C)

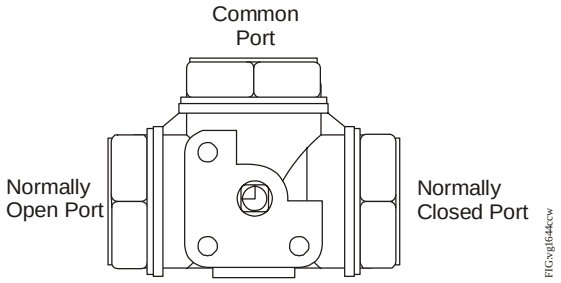

Figure 4: Top View of VG1644 Series Three-Way Ball Valve (Actuator Fully Counterclockwise)

IMPORTANT: Protect the actuator from dripping water, condensation, and other moisture. Water or moisture could result in an electrical short, which may damage or affect the operation of the actuator.

IMPORTANT: Do not cover the actuator with thermal insulating material. High ambient temperatures may damage the actuator, and a hot water pipe, steam pipe, or other heat source may overheat it.

Contact your local Johnson Controls® representative for compatibility concerns before using VG1000 Series Ball Valves to control the flow of fluids other than those outlined in the *Technical Specifications* table in this document.

Press Valve Installation

VG1000 press end connection valves are installed using RIDGID® press tools. Always refer to the operator's manual supplied with the RIDGID press tool that is used to make the valve end connections. The manual should provide proper instructions for the safe operation of the tool, proper crimping procedures, and methods of inspecting the finished connection. If you use a battery-operated press tool, ensure its proper operation by fully charging the unit. To avoid damage to the integral O-ring, never use sealant or pipe dope with a press connection. Always inspect the end connections of the valve before making the connection. The end connection should not be deformed, and the internal, integral O-ring must be in place for a proper seal.

Sweat Valve Installation

When soft soldering sweat ball valves, be sure to use a low temperature solder with a melting point that does not exceed 450°F (232°C). For lead-free RoHS compliance, a 96.5% Tin/3.5% silver solder is recommended. Never install the actuator on the valve until you have completed the soldering operation and the valve body has cooled. Before soldering, minimize the risk of damage to the ball seals by positioning the ball so that Port A is fully open. When soldering, always apply a wet rag around the valve's neck and cover as much of the valve body with the rag as possible. Direct the tip of the flame away from the valve and always heat the copper tubing directly, but never the valve body. Solder Port A first, then the remaining ports. These steps provide maximum protection to the internal valve components. See Figure 5 for details.

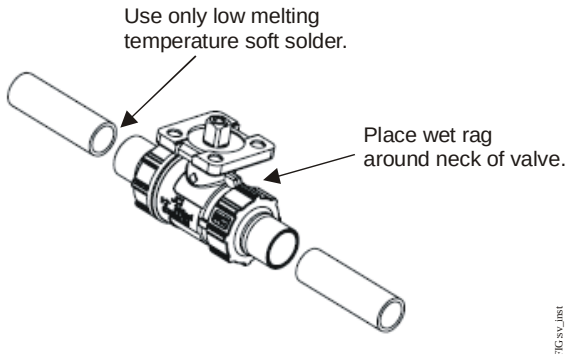

Figure 5: Sweat Valve Installation

Dimensions

See Figure 6 for dimensions of the Non-Spring Return VA9104 Actuated VG1241, VG1245, VG1841, and VG1845 Series Ball Valve with M9000-550 Linkage. See Table 1 for specific model linkage dimensions.

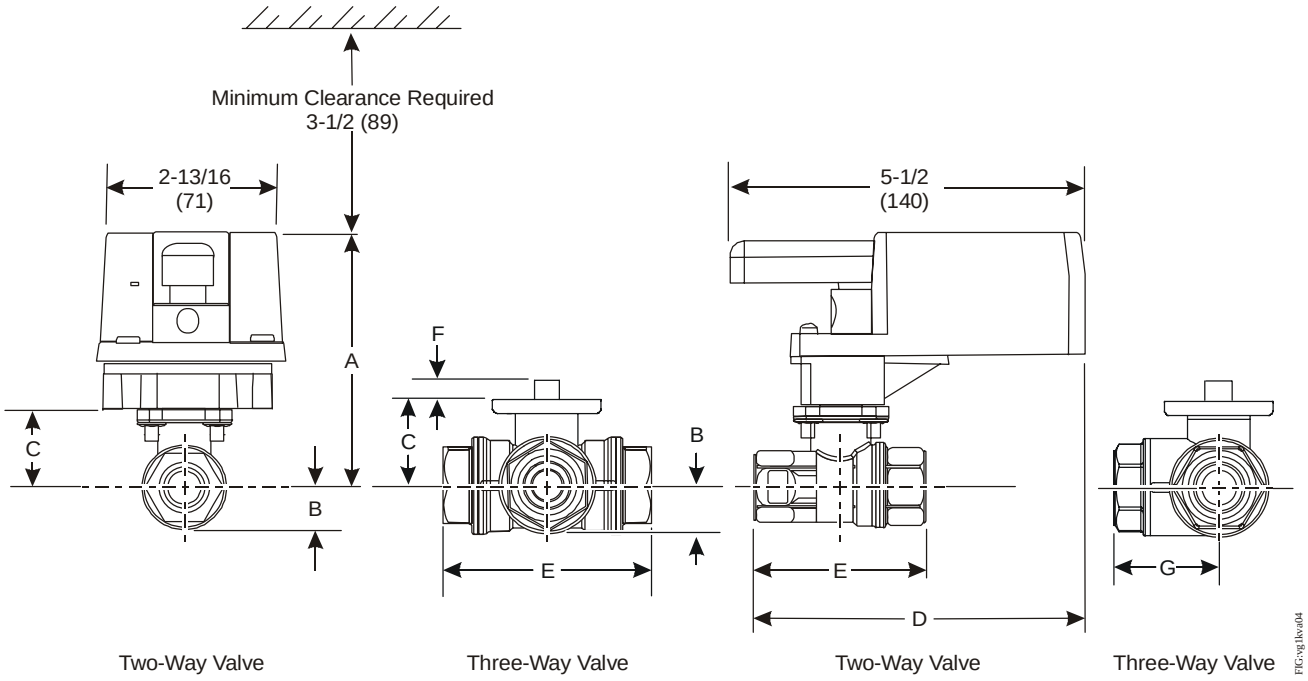

Figure 6: Non-Spring Return VA9104 Actuated VG1241, VG1245, VG1841, and VG1845 Series Ball Valve with M9000-550 Linkage Dimensions, in. (mm)

Table 1: VA9104 or M9104 with M9000-550 Linkage Actuated VG1241, VG1245, VG1841, and VG1845 Series Ball Valve Dimensions, in. (mm)

Valve Size, in. (DN)[1]	A	B	C	D	E	F	G
1/2 (DN15)	3-7/8 (98)	21/32 (17)	1-7/32 (31)	5-7/64 (129)	2-33/64 (64)	11/32 (9)	1-1/4 (32)
3/4 (DN20)	3-7/8 (98)	21/32 (17)	1-7/32 (31)	5-7/32 (133)	2-51/64 (71)	11/32 (9)	1-13/32 (36)
1 (DN25)	3-11/16 (100)	3/4 (19)	1-19/64 (33)	5-9/16 (141)	3-13/32 (87)	11/32 (9)	1-11/16 (43)

1. On models with the flow-characterizing disk, the disk is located in Port A. Port A must be the inlet.

See Figure 7 for dimensions of the Non-Spring Return VA9104 Actuated VG1271, VG1275, VG1871, and VG1875 Series Sweat End Connection Ball Valves. See Table 2 for specific model dimensions.

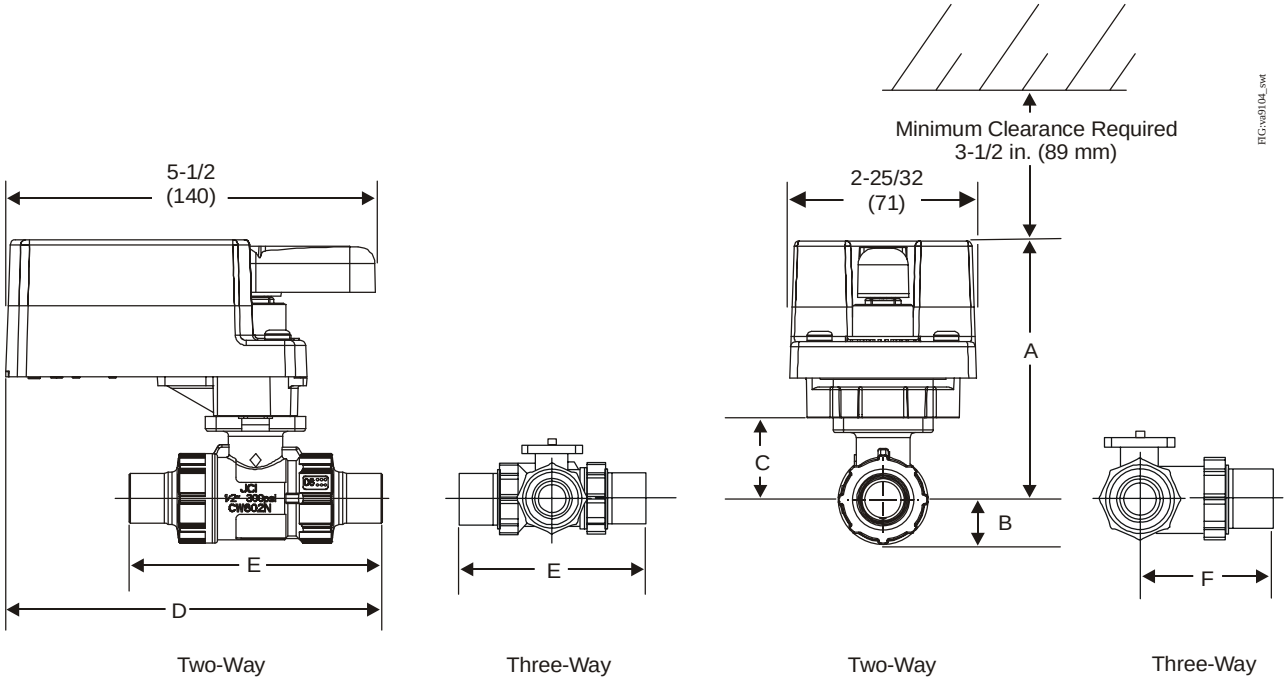

Figure 7: VA9104 Actuated VG1271, 1275, VG1871, and VG1875 Series Ball Valves with Sweat End Connections Dimensions, in. (mm)

Table 2: VA9104 Actuated VG1271, VG1275, VG1871, and VG1875 Series Ball Valves with Sweat End Connections Dimensions, in. (mm)

Valve Size, in. (DN)[1]	A	B	C	D	E	F
1/2 (DN15)	3-7/8 (98)	21/32 (17)	1-7/32 (31)	5-45/64 (145)	3-25/32 (96)	2-13/16 (55)
3/4 (DN20)	3-7/8 (98)	21/32 (17)	1-7/32 (31)	5-57/64 (150)	4-3/32 (104)	2-15/32 (62)
1 (DN25)	3-15/16 (100)	3/4 (19)	1-19/64 (33)	6-1/8 (156)	4-41/64 (118)	2-27/32 (72)

1. On models with the flow-characterizing disk, the disk is located in Port A. Port A must be the inlet.

See Figure 8 for dimensions of the Non-Spring Return VA9104 Actuated VG1291, VG1295, VG1891, and VG1895 Series Press End Connection Ball Valves. See Table 3 for specific model dimensions.

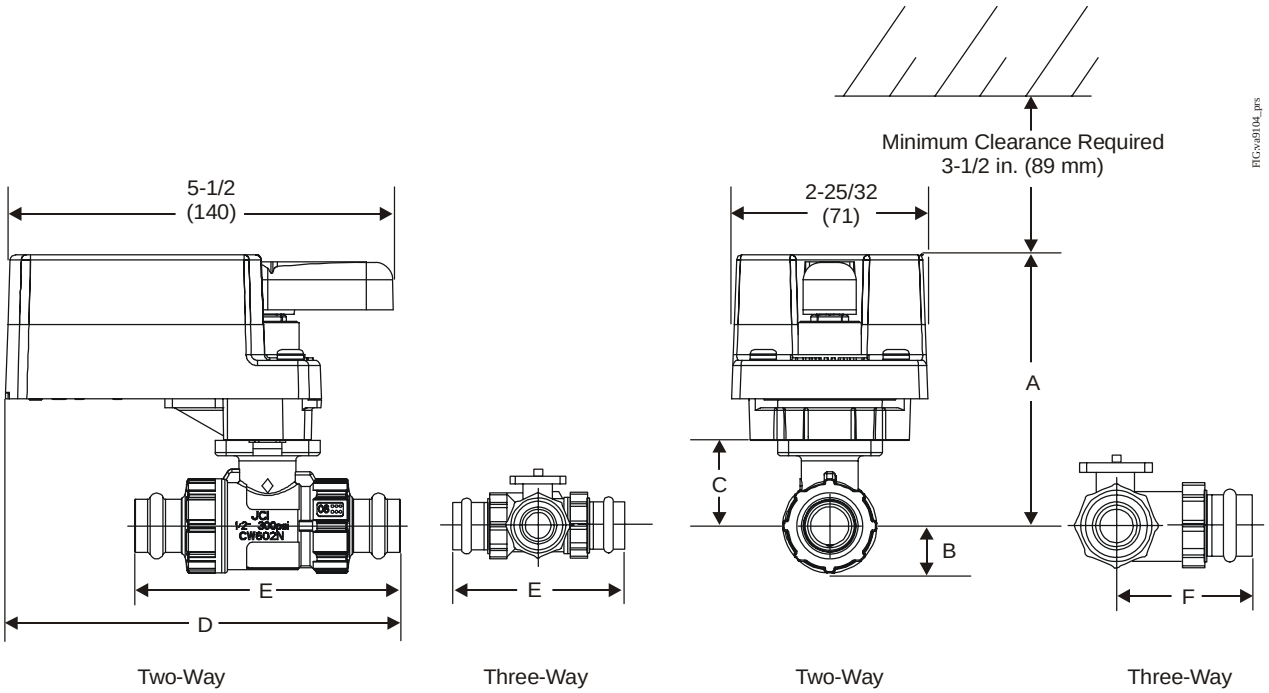

Figure 8: VA9104 Actuated VG1291, VG1295, VG1891, and VG1895 Series Ball Valves with Press End Connections Dimensions, in. (mm)

Table 3: VA9104 Actuated VG1291, VG1295, VG1891, and VG1895 Series Ball Valves with Press End Connections Dimensions, in. (mm)

Valve Size, in. (DN)[1]	A	B	C	D	E	F
1/2 (DN15)	3-7/8 (98)	21/32 (17)	1-7/32 (31)	5-45/64 (145)	3-25/32 (96)	2-13/16 (55)
3/4 (DN20)	3-7/8 (98)	21/32 (17)	1-7/32 (31)	5-57/64 (150)	4-3/32 (104)	2-15/32 (62)
1 (DN25)	3-11/16 (100)	3/4 (19)	1-19/64 (33)	6-1/8 (156)	4-41/64 (118)	2-27/32 (72)

1. On models with the flow-characterizing disk, the disk is located in Port A. Port A must be the inlet.

See Figure 9 for dimensions of the VA2202 Actuated VG1241, VG1245, VG1841, and VG1845 Series Ball Valve with NPT End Connections. See Table 4 for specific model linkage dimensions.

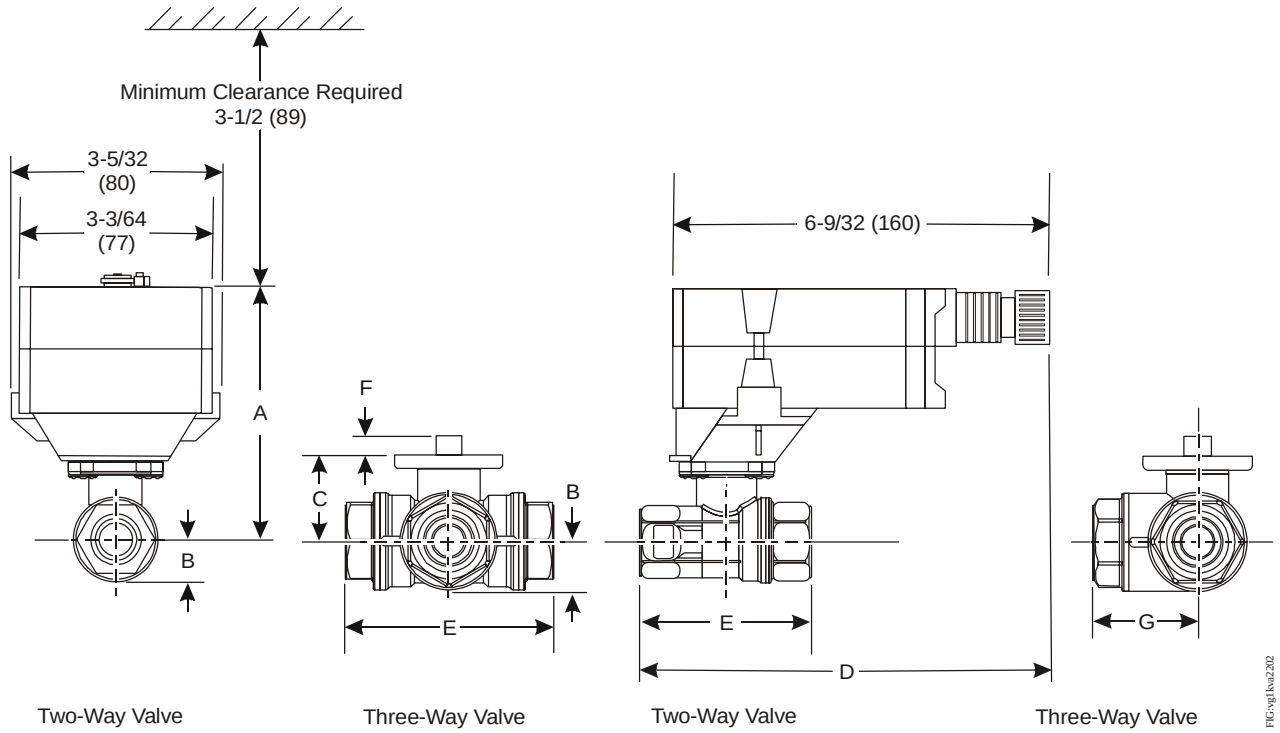

Figure 9: VA2202 Actuated VG1241, VG1245, VG1841, and VG1845 Series Ball Valve with NPT End Connections Dimensions, in. (mm)

Table 4: VA2202 Actuated VG1241, VG1245, VG1841, and VG1845 Series Ball Valve with NPT End Connections Dimensions, in. (mm)

Valve Size, in. (DN)[1]	A	B	C	D	E	F	G
1/2 (DN15)	4-1/4 (108)	21/32 (17)	1-7/32 (31)	6-23/32 (171)	2-33/64 (64)	11/32 (9)	1-1/4 (32)
3/4 (DN20)	4-1/4 (108)	21/32 (17)	1-7/32 (31)	6-7/8 (175)	2-51/64 (71)	11/32 (9)	1-13/32 (36)
1 (DN25)	4-9/32 (109)	3/4 (19)	1-19/64 (33)	7-7/64 (181)	3-13/32 (87)	11/32 (9)	1-45/64 (43)

1. On models with the flow-characterizing disk, the disk is located in Port A. Port A must be the inlet.

See Figure 10 for dimensions of the Spring Return VA2202 Actuated VG1271, VG1275, VG1871, and VG1875 Series Sweat End Connection Ball Valves. See Table 5 for specific model dimensions.

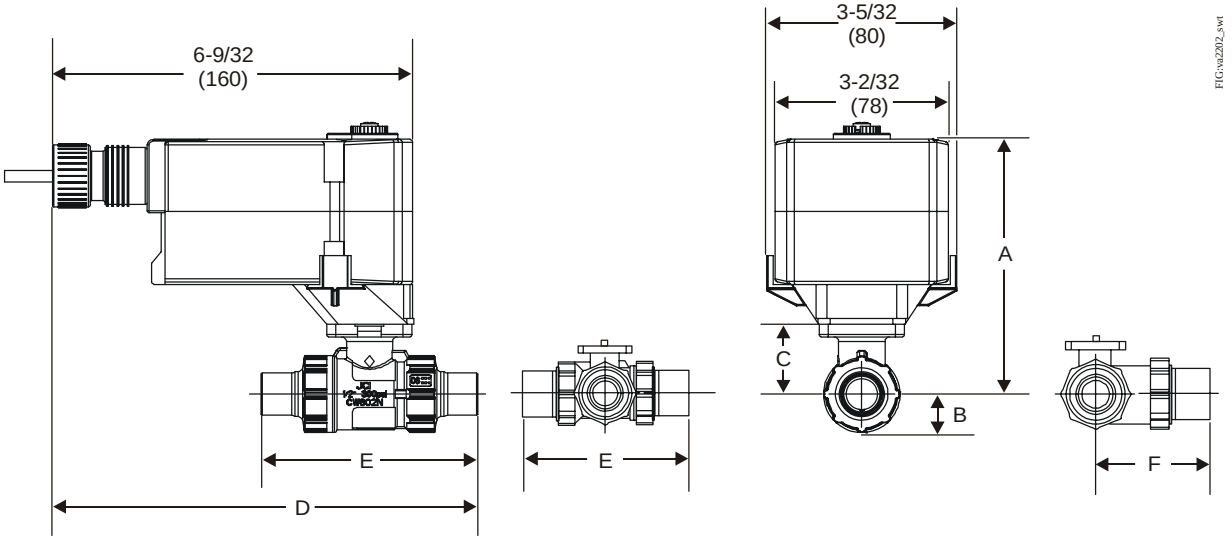

Figure 10: VA2202 Actuated VG1271, VG1275, VG1871, and VG1875 Series Ball Valves with Sweat End Connections Dimensions, in. (mm)

Table 5: VA2202 Actuated VG1271, VG1275, VG1871, and VG1875 Series Ball Valves with Sweat End Connections Dimensions, in. (mm)

Valve Size, in. (DN)[1]	A	B	C	D	E	F
1/2 (DN15)	4-1/4 (108)	21/32 (17)	1-7/32 (31)	7-23/64 (187)	3-25/32 (96)	2-13/16 (55)
3/4 (DN20)	4-1/4 (108)	21/32 (17)	1-7/32 (31)	7-33/64 (191)	4-3/32 (104)	2-15/32 (62)
1 (DN25)	4-21/64 (110)	3/4 (19)	1-19/64 (33)	7-51/64 (198)	4-41/64 (118)	2-27/32 (72)

1. On models with the flow-characterizing disk, the disk is located in Port A. Port A must be the inlet.

See Figure 11 for dimensions of the Spring Return VA2202 Actuated VG1291, VG1295, VG1891, and VG1895 Series Press End Connection Ball Valves. See Table 6 for specific model dimensions.

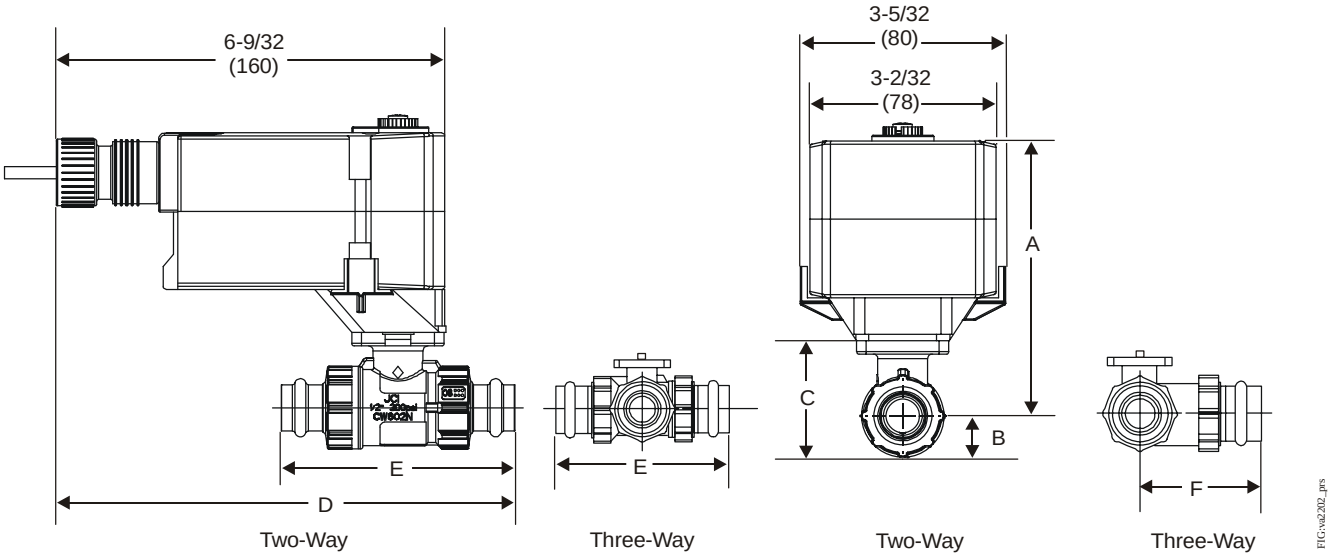

Figure 11: VA2202 Actuated VG1291, VG1295, VG1891, and VG1895 Series Ball Valve with Press End Connections Dimensions, in. (mm)

Table 6: VA2202 Actuated VG1291, VG1295, VG1891, and VG1895 Series Ball Valve with Press End Connections Dimensions, in. (mm)

Valve Size, in. (DN)[1]	A	B	C	D	E	F
1/2 (DN15)	4-1/4 (108)	21/32 (17)	1-7/32 (31)	7-23/64 (187)	3-25/32 (96)	2-13/16 (55)
3/4 (DN20)	4-1/4 (108)	21/32 (17)	1-7/32 (31)	7-33/64 (191)	4-3/32 (104)	2-15/32 (62)
1 (DN25)	4-21/64 (110)	3/4 (19)	1-19/64 (33)	7-51/64 (198)	4-41/64 (118)	2-27/32 (72)

1. On models with the flow-characterizing disk, the disk is located in Port A. Port A must be the inlet.

See Figure 12 for dimensions of the Non-Spring Return M9106 or M9109 Actuated VG1241, VG1245, VG1841, and VG1845 Series Ball Valve with M9000-520 Linkage. See Table 7 for specific model linkage dimensions.

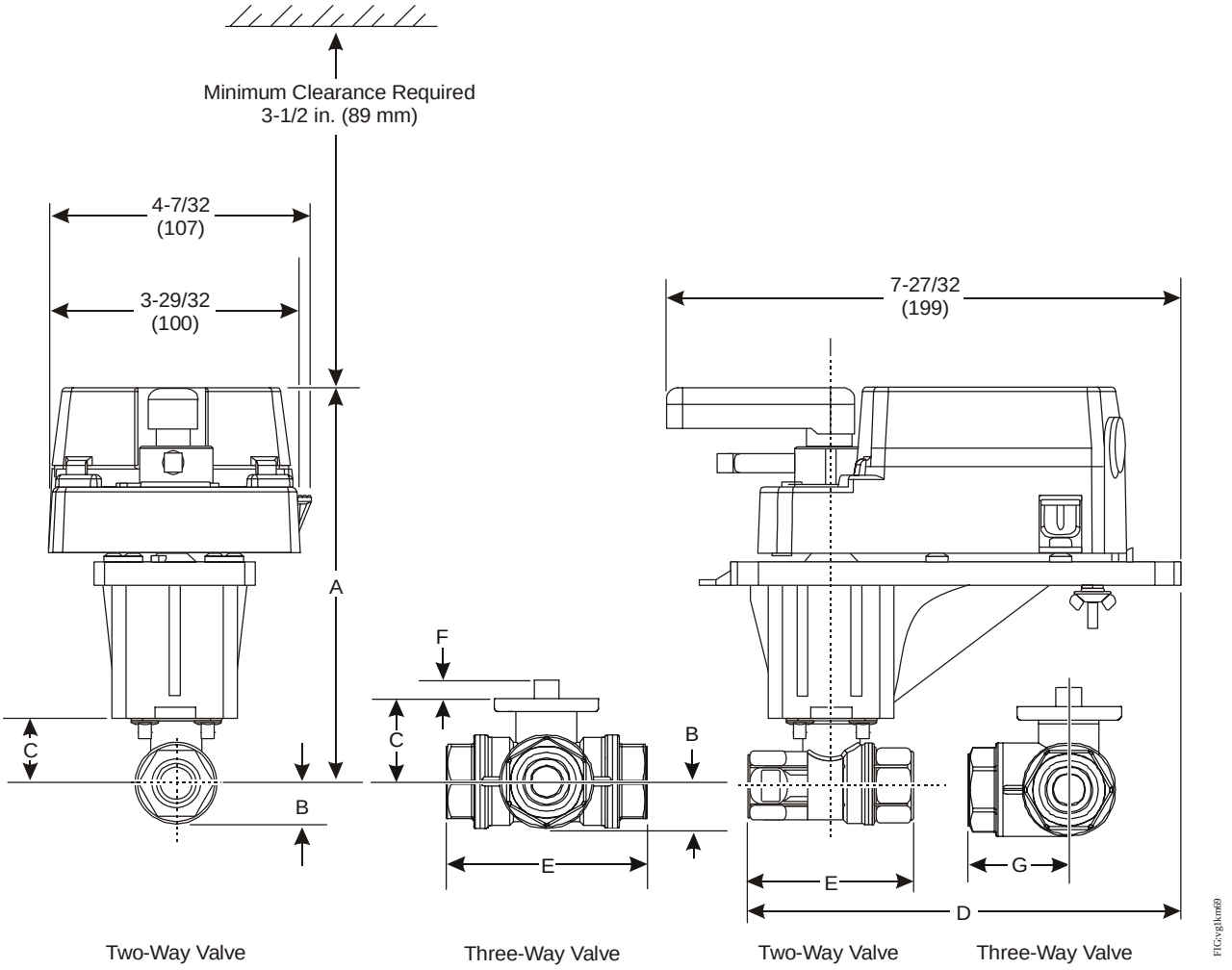

Figure 12: Non-Spring Return M9106 or M9109 Actuated VG1241, VG1245, VG1841, and VG1845 Series Ball Valve with M9000-520 Linkage Dimensions, in. (mm)

Table 7: M9106 and M9109 Actuated VG1241, VG1245, VG1841, and VG1845 Series Ball Valve with M9000-520 Linkage Dimensions, in. (mm)

Valve Size, in. (DN)[1]	A	B	C	D	E	F	G
1/2 (DN15)	6-19/64 (160)	21/32 (17)	1-7/32 (31)	6-49/64 (172)	2-33/64 (64)	11/32 (9)	1-1/4 (32)
3/4 (DN20)	6-19/64 (160)	21/32 (17)	1-7/32 (31)	6-29/32 (175)	2-51/64 (71)	11/32 (9)	1-13/32 (36)
1 (DN 25)	6-3/8 (162)	3/4 (19)	1-19/64 (33)	7-13/64 (183)	3-13/32 (87)	11/32 (9)	1-11/16 (43)
1-1/4 (DN32)	6-13/16 (173)	1-1/32 (26)	1-23/32 (44)	7-15/32 (190)	3-15/16 (100)	11/32 (9)	2 (51)
1-1/2 (DN40)	6-31/32 (177)	1-9/64 (29)	1-57/64 (48)	7-43/64 (195)	4-21/64 (110)	11/32 (9)	2-1/8 (54)
2 (DN50)	7-11/64 (182)	1-15/32 (37)	2-1/16 (53)	7-59/64 (201)	4-27/32 (123)	11/32 (9)	2-9/16 (65)

1. On models with the flow-characterizing disk, the disk is located in Port A. Port A must be the inlet.

See Figure 13 for dimensions of the Spring Return M9206 Actuated VG1241, VG1245, VG1841, and VG1845 Series Ball Valve with M9000-520 Linkage. See Table 8 for specific model linkage dimensions.

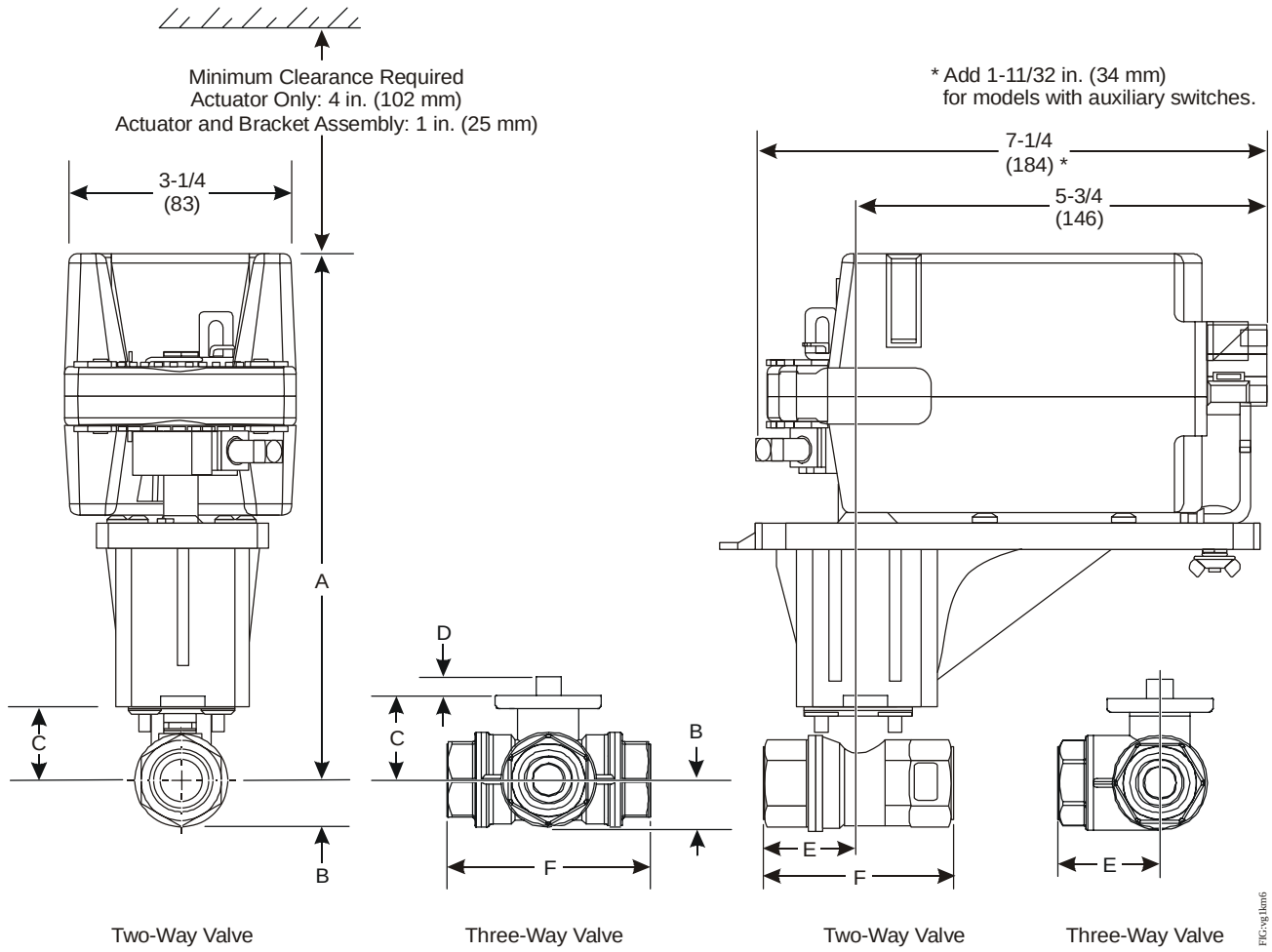

Figure 13: Spring Return M9206 Actuated VG1241, VG1245, VG1841, and VG1845 Series Ball Valve with M9000-520 Linkage Dimensions, in. (mm)

Table 8: M9206 Actuated VG1241, VG1245, VG1841, and VG1845 Series Ball Valve with M9000-520 Linkage Dimensions, in. (mm)

Valve Size, in. (DN)[1]	A[2]	B	C	D	E	F
1/2 (DN15)	7-13/64 (183)	21/32 (17)	1-7/32 (31)	11/32 (9)	1-1/4 (32)	2-33/64 (64)
3/4 (DN20)	7-13/64 (183)	21/32 (17)	1-7/32 (31)	11/32 (9)	1-13/32 (36)	2-51/64 (71)
1 (DN25)	7-9/32 (185)	3/4 (19)	1-19/64 (33)	11/32 (9)	1-45/64 (43)	3-13/32 (87)
1-1/4 (DN32)	7-11/16 (195)	1-1/32 (26)	1-23/32 (44)	11/32 (9)	1-31/32 (50)	3-15/16 (100)
1-1/2 (DN40)	7-7/8 (200)	1-9/64 (29)	1-57/64 (48)	11/32 (9)	2-11/64 (55)	4-21/64 (110)

1. On models with the flow-characterizing disk, the disk is located in Port A. Port A must be the inlet.
2. For valve assemblies with M9206-Bxx-2S Series Actuators, subtract 19/32 in. (15 mm) from Dimension A (Column A).

See Figure 14 for dimensions of the Spring Return M9210 Actuated VG1241, VG1245, VG1841, and VG1845 Series Ball Valve with M9000-517 Linkage. See Table 9 for specific model linkage dimensions.

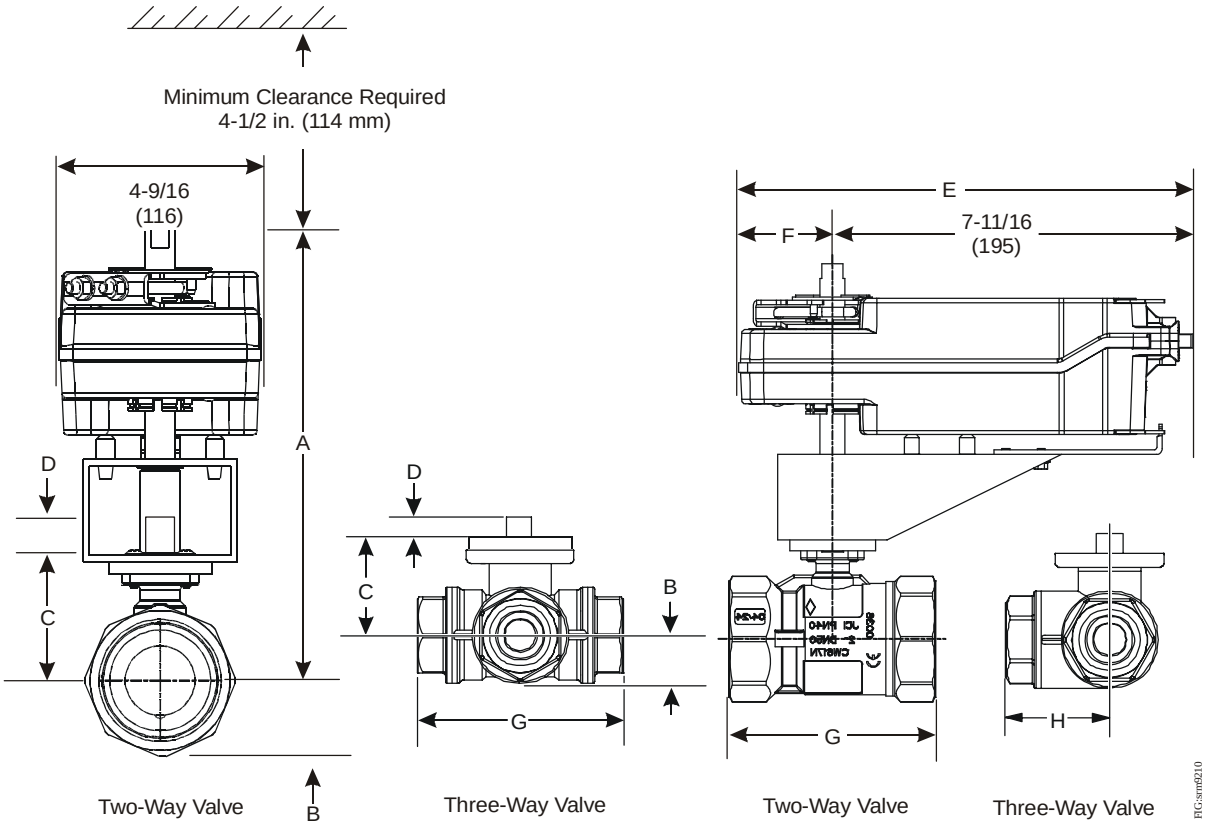

Figure 14: Spring Return M9210 Actuated VG1241, VG1245, VG1841, and VG1845 Series Ball Valve with M9000-517 Linkage Dimensions, in. (mm)

Table 9: M9210 Actuated VG1241, VG1245, VG1841, and VG1845 Series Ball Valve with M9000-517 Linkage Dimensions, in. (mm)

Valve Size, in. (DN)[1]	A	B	C	D	E	F	G	H
2 (DN50)	8-25/32 (223)	1-15/32 (37)	2-1/8 (54)	11/32 (9)	10-5/16 (262)	2-13/32 (61)	4-27/32 (123)	2-27/64 (62)

1. On models with the flow-characterizing disk, the disk is located in Port A. Port A must be the inlet.

See Figure 15 for dimensions of the Non-Spring Return M91xx Series Actuated VG1241, VG1245, VG1841, and VG1845 Series Ball Valve with M9000-516 Linkage and Field-Installed M9000-330 Weather Shield.

See Figure 16 for dimensions of the Spring Return M9210 Series Actuated VG1241, VG1245, VG1841, and VG1845 Series Ball Valve with M9000-517 Linkage and Field-Installed M9000-340 Weather Shield. See Table 10 for specific model linkage dimensions.

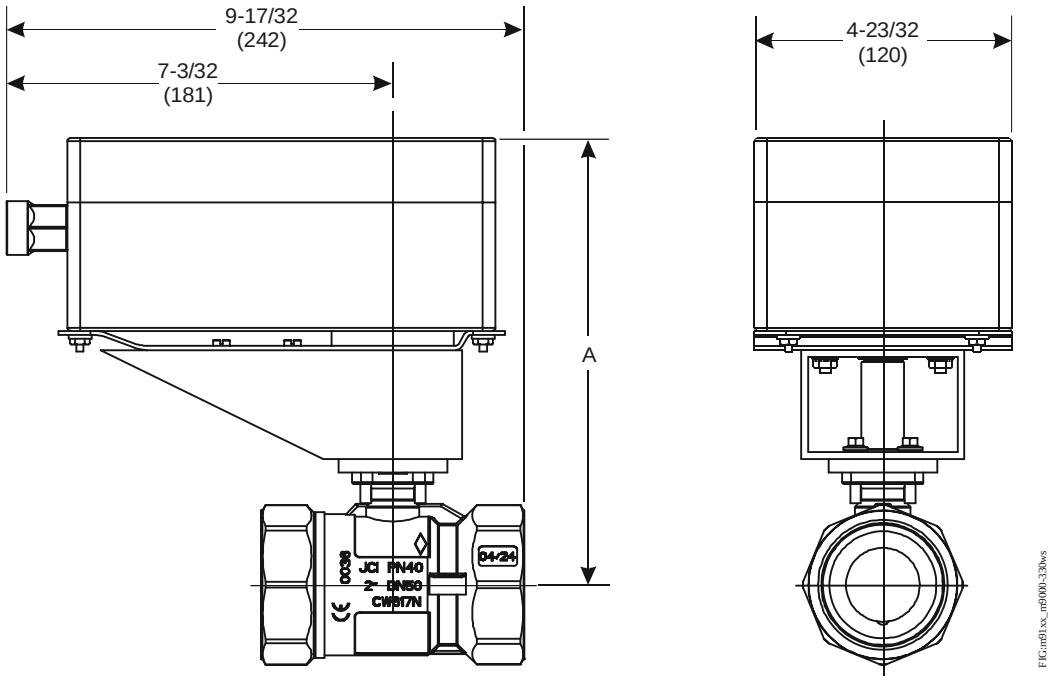

Figure 15: Non-Spring Return M91xx Series Actuated VG1241, VG1245, VG1841, and VG1845 Series Ball Valve with M9000-516 Linkage and Field-Installed M9000-330 Weather Shield Dimensions, in. (mm)

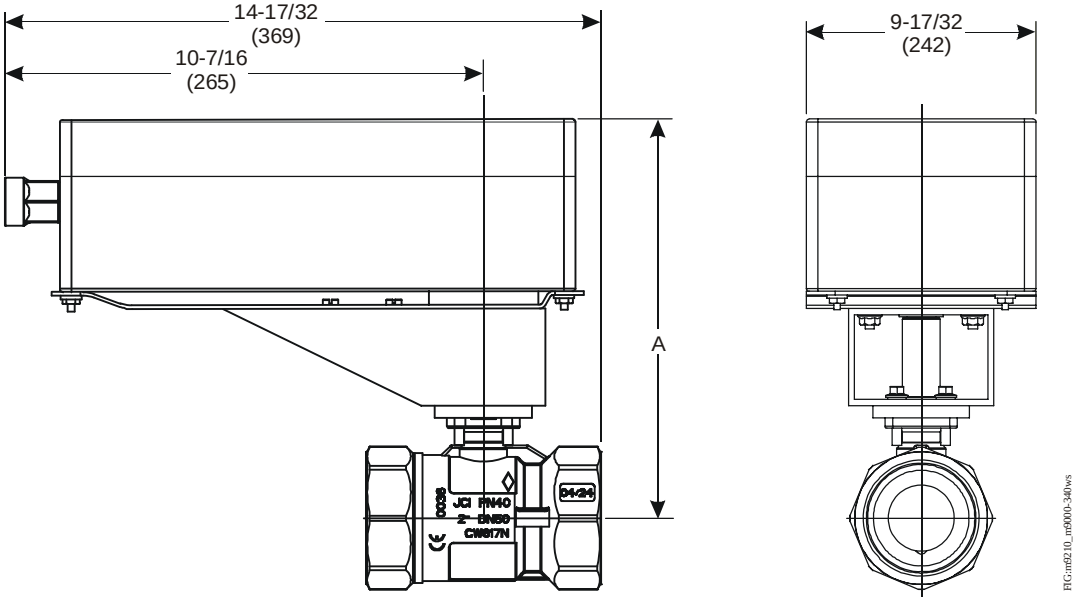

Figure 16: Spring Return M9210 Series Actuated VG1241, VG1245, VG1841, and VG1845 Series Ball Valve with M9000-517 Linkage and Field-Installed M9000-340 Weather Shield Dimensions, in. (mm)

Table 10: M9000 Series Actuated VG12x1, VG12x5, VG18x1, and VG18x5 Series Ball Valve with Weather Shield Dimensions, in. (mm)

Valve Size, in. (DN)	A	
	M91xx	M9210
1/2 (DN15)	7-3/8 (187)	8-17/32 (217)
3/4 (DN20)	7-3/8 (187)	8-17/32 (217)
1 (DN25)	7-7/16 (189)	8-5/8 (219)
1-1/4 (DN32)	7-7/8 (200)	9-1/16 (230)
1-1/2 (DN40)	8-1/32 (204)	9-7/32 (234)
2 (DN50)	8-7/32 (209)	9-13/32 (239)

Piping

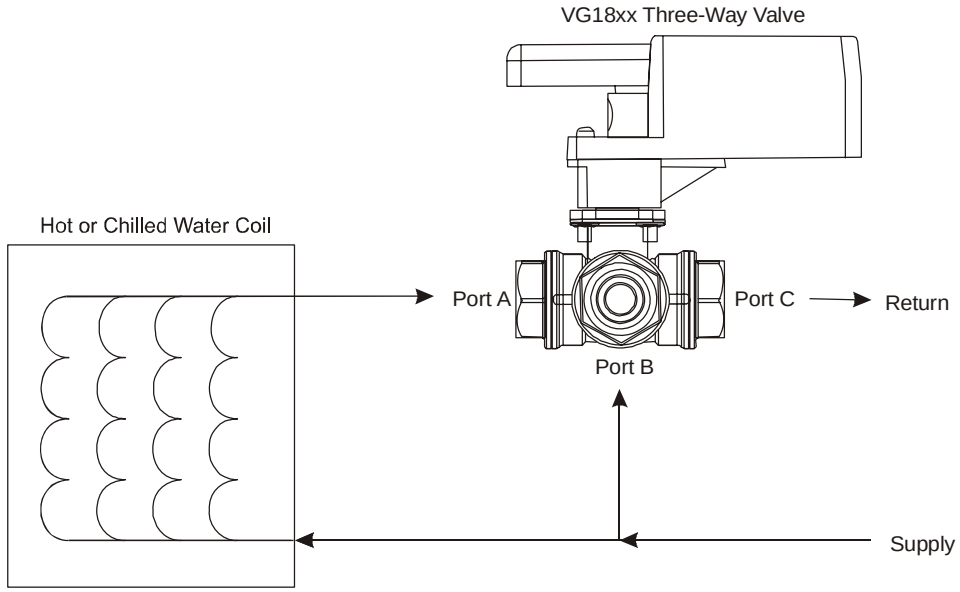

Typical Three-Way Ball Valve Application

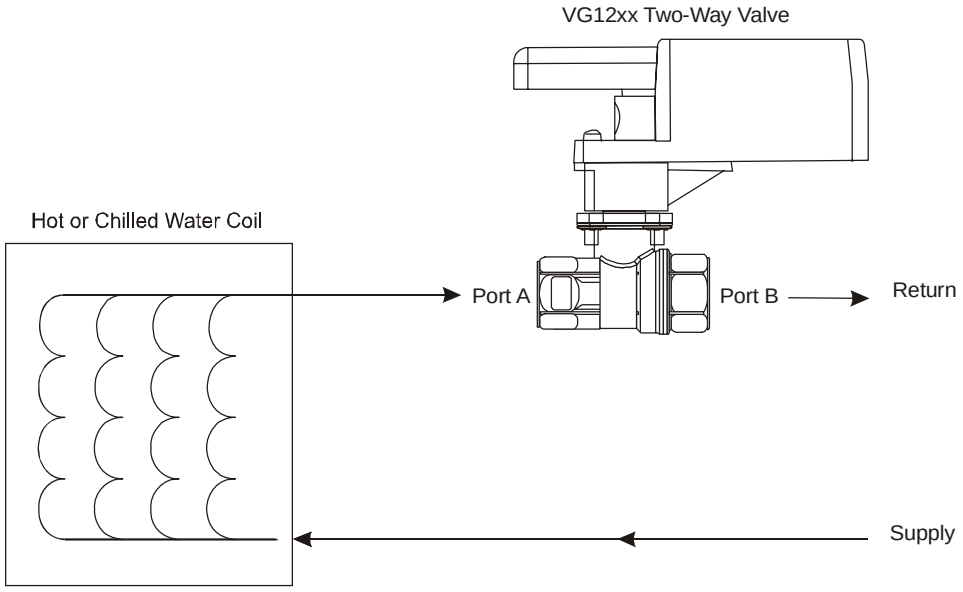

Typical Two-Way Ball Valve Application

RGvg1000pip

Note: Mount the valve downstream from the coil to minimize heat transfer to the actuator.

Figure 17: Typical VG1000 Piping

Wiring

Be sure to wire the input lines to the electric actuator correctly for the valve to move in the proper direction.

IMPORTANT: Use copper conductors only. Make all wiring connections in accordance with local, national, and regional regulations. Do not exceed the actuator's electrical ratings.

WARNING: Risk of Electric Shock. Disconnect power supply before making electrical connections. Contact with components carrying hazardous voltage can cause electric shock and may result in severe personal injury or death.

CAUTION: Risk of Property Damage. Do not apply power to the system before checking all wiring connections. Short circuited or improperly connected wires may result in permanent damage to the equipment.

Troubleshooting

Servicing the Actuator or Piping System

When servicing the electric actuator or the piping system:

- disconnect the power supply to the actuator
- relieve the pressure in the piping system

IMPORTANT: Do not attempt to manually rotate the drive shaft while the actuator is installed without first releasing the actuator gears. Manually rotating the drive shaft without releasing the actuator gears may result in permanent damage to the actuator.

Repair Information

If the VG1000 Series Forged Brass Ball Valve fails to operate within its specifications, replace the unit. For a replacement valve, contact the nearest Johnson Controls representative.

Technical Specifications

VG1000 Series Forged Brass Ball Valves (Part 1 of 2)

Service[1]		Hot Water, Chilled Water, 50/50 Glycol Solutions, and 15 psig (103 kPa) Saturated Steam for HVAC Systems
Fluid Temperature Limits	**Water**	VG12x1 and VG18x1 Series: 23 to 203°F (-5 to 95°C) VG12x5 and VG18x5 Series: -22 to 284°F (-30 to 140°C)
	Steam	VG12x5 Series: 15 psig (103 kPa) at 250°F (121°C) VG12x1 Series: Not Rated for Steam Service
Actuator Maximum Fluid Operating Temperature Limit	**212°F (100°C)**	VA2202
		VA9104
		M9104 with M9000-550 Linkage
		M2202 with M2000-500 Linkage
	284°F (140°C)	M9106 or M9109 with M9000-520 Linkage
		M9206 with M9000-520 Linkage
		M9210 with M9000-517 Linkage
Valve Body Pressure/ Temperature Rating	**Water**	VG1241, VG1245, VG1841, and VG1845 Series: 580 psig (3,996 kPa) at 203°F (95°C) (PN40) 464 psig (3,196 kPa) at 284°F (140°C) (PN40)
		VG1271, VG1275, VG1871, and VG1875 Series: 300 psig (2,067 kPa)
		VG1291, VG1295, VG1891, and VG1895 Series: 300 psig (2,067 kPa)
	Steam	15 psig (103 kPa) Saturated Steam
Maximum Closeoff Pressure		200 psig (1,378 kPa)
Maximum Recommended Operating Pressure Drop		50 psi Maximum Differential Pressure and 30 psi Maximum for Quiet Service Ball Valves

VG1000 Series Forged Brass Ball Valves (Part 2 of 2)

Flow Characteristics	**Two-Way**	Equal Percentage
	Three-Way	Equal Percentage Flow Characteristics of In-line Port (Coil) and Linear Flow Characteristics of Angle Port (Bypass)
Rangeability[2]		Greater than 500:1
Minimum Ambient Operating Temperature	**-4°F (-20°C)**	VA9104 and M9104 Series Non-Spring Return Actuator
	-22°F (-30°C)	VA2202 and M2202 Series Spring Return Actuators
	-4°F (-20°C)	M9106 and M9109 Series Non-Spring Return Actuators
	-25°F (-32°C)	M9206 Series Spring Return Actuators
	-40°F (-40°C)	M9210 and M9220 Series Spring Return Actuators
Maximum Ambient Operating Temperature (Limited by the Actuator)[3]	**Direct Mount**	140°F (60°C) VA9104 Series Non-Spring Return Actuators 122°F (50°C) VA2202 Series Spring Return Actuators
	M9000-550 Linkage	140°F (60°C) M9104 Series Non-Spring Return Actuators
	M2000-500 Linkage	122°F (50°C) M2202 Series Spring Return Actuators
	M9000-520 Linkage	125°F (52°C) M9106 and M9109 Series Non-Spring Return Actuators 140°F (60°C) M9206 Series Spring Return Actuators
	M9000-51x Series Linkage	125°F (52°C) M9106 Series Non-Spring Return Actuators 122°F (50°C) M9100 Series Non-Spring Return Actuators 140°F (60°C) M9206 Series Spring Return Actuators 131°F (55°C) M9210 Series Spring Return Actuators
Leakage		0.01% of Maximum Flow per ANSI/FCI 70-2, Class 4 1% of Maximum Flow for Three-Way Bypass Port
End Connections		National Pipe Thread (NPT): 1/2 to 2 in. (DN15 to DN50) Sweat: 1/2 to 1 in. (DN15 to DN25) Press (ProPress® compatible): 1/2 to 1 in. (DN15 to DN25)
Materials	**Body**	Forged Brass
	Ball	VG12x1 and VG18x1 Series: Chrome Plated Brass VG12x5 and VG18x5 Series: 300 Series Stainless Steel
	Blowout-Proof Stem	VG12x1 and VG18x1 Series: Nickel Plated Brass VG12x5 and VG18x5 Series: 300 Series Stainless Steel
	Seats	Graphite-Reinforced Polytetrafluoroethylene (PTFE) with Ethylene Propylene Diene Monomer (EPDM) O-Ring Backing
	Stem Seals	EPDM Double O-Rings
	Characterizing Disk	Amodel® AS-1145HS Polyphthalamide Resin

1. Proper water treatment is recommended; refer to the VDI 2035 Standard.
2. Rangeability is defined as the ratio of maximum controllable flow to minimum controllable flow.
3. In steam applications, install the valve with the stem horizontal to the piping and wrap the valve and piping with insulation.

The performance specifications are nominal and conform to acceptable industry standards. For application at conditions beyond these specifications, consult the local Johnson Controls office. Johnson Controls, Inc. shall not be liable for damages resulting from misapplication or misuse of its products.

Johnson Controls

Building Efficiency
507 E. Michigan Street, Milwaukee, WI 53202

Metasys® and Johnson Controls® are registered trademarks of Johnson Controls, Inc.
All other marks herein are the marks of their respective owners. © 2008 Johnson Controls, Inc.

Published in U.S.A. www.johnsoncontrols.com

Appendix for ECM 4:
Integrated and New Energy Management Systems

III. Points List

"Page content is subject to Confidentiality Restrictions"

This page is intentionally left blank.

Carter ES

Point Description	Total Points	Hardware																			
		Outputs								Inputs											
		Digital				Analog				Digital						Analog					
		Relay	Contactor	Solenoid	E/P switch	P/E	E/P Xdcr	Speed Reference	0-10VDC/4-20mA	Current Switch	Pressure Switch	Dry Contact	Flame Fail	Flow switch	CO2 Sensor	Temperature	Humidity	Pressure	Flow Rate		
New control points to be installed																					
Exhaust Fan																					
Start/Stop	16	16																			
Kitchen MAU																					
Start/Stop	1	1																			
Status	1									1											
Space Temperature	1															1					
Supply Air Temperature	1															1					
Heating Control	1						1														
Cooling Control	1						1														
Freezestat	1											1									
Outside Air Dampers	1				1																
HW Converter																					
Converter Steam Control Valve	1						1														
3-Way Control Valve	1						1														
Converter Hot Water Supply Temperature	1															1					
Converter Hot Water Return Temperature	1															1					
Existing DDC (Metasys)																					
L.P. Steam Boiler																					
Enable/Disable	2	2																			
Status	2												2								
Boiler Trouble Critical Alarm	2											2									
Outside Air Conditions	1															1					
Combustion Air Damper	2	2																			
HW HX Water Circ.Pump																					
Enable/Disable	2	2																			
Status	2									2											
Zone Valve	1						1														
Steam Header Pressure	1																	1			
Hot Water Supply Temperature	1															1					
Hot Water Return Temperature	1															1					
Totals	**45**	**23**	**0**	**0**	**1**	**0**	**5**	**0**	**0**	**3**	**0**	**3**	**2**	**0**	**0**	**7**	**0**	**1**	**0**	**0**	

Dey ES

Point Description	Total Points	Hardware																			
		Outputs								Inputs											
		Digital				Analog				Digital						Analog					
		Relay	Contactor	Solenoid	E/P switch	P/E	E/P Xdcr	Speed Reference	0-10VDC/4-20mA	Current Switch	Pressure Switch	Dry Contact	Flame Fail	Flow switch	CO2 Sensor	Temperature	Humidity	Pressure	Flow Rate		
New control points to be installed																					
Perimeter Radiation Zone																					
Space Temperature	7															7					
Heating Control	7						7														
Exhaust Fan																					
Start/Stop	14	14																			
Heat Pump - Vertical																					
Start/Stop	6	6																			
Space Temperature	6															6					
Cabinet Unit Heaters																					
Start/Stop	4	4																			
Space Temperature	4															4					
Heating Control Valve	4				4																
Kitchen MAU																					
Start/Stop	1	1																			
Status	1									1											
Space Temperature	1															1					
Supply Air Temperature	1															1					
Heating Control	1						1														
Cooling Control	1	1																			
Freezestat	1											1									
Outside Air Dampers	1				1																
H&V Unit																					
Start/Stop	2	2																			
Status	2									2											
Space Temperature	2															2					
Supply Air Temperature	2															2					
Heating Control	2						2														
Freezestat	2											2									
Outside/Return Air Damper	2						2														
Roof Top Unit																					
Start/Stop	2	2																			
Space Temperature	2															2					
Hot Water Boiler																					
Enable/Disable	2	2																			
Status	2												2								
Boiler Trouble Critical Alarm	2											2									
Combustion Air Damper	2	2																			
Outside Air Conditions	1															1					
Hot Water Supply Temperature	1															1					
Hot Water Return Temperature	1															1					
Heating Hot Water Circulation Pump																					
Enable/Disable	4	4																			
Status	4									4											
Totals	**97**	**38**	**0**	**0**	**5**	**0**	**12**	**0**	**0**	**7**	**0**	**5**	**2**	**0**	**0**	**28**	**0**	**0**	**0**	**0**	

Fallon ES

Point Description	Total Points	Hardware																			
		Outputs								Inputs											
		Digital				Analog				Digital						Analog					
		Relay	Contactor	Solenoid	E/P switch	P/E	E/P Xdcr	Speed Reference	0-10VDC/4-20mA	Current Switch	Pressure Switch	Dry Contact	Flame Fail	Flow switch	CO2 Sensor	Temperature	Humidity	Pressure	Flow Rate		
Existing DDC (Metasys)																					
Unit Ventilators																					
Start/Stop	19	19																			
Status	19									19											
Space Temperature	19															19					
Supply Air Temperature	19															19					
Heating Control	19								19												
Freezestat	19											19									
Outside/Return Air Damper	19								19												
Perimeter Radiation Zone																					
Space Temperature	3															3					
Heating Control	3						3														
Exhaust Fan																					
Start/Stop	10	10																			
Air Handling Unit																					
Start/Stop	6	6																			
Status	6									6											
Space Temperature	6															6					
Supply Air Temperature	6															6					
Mixed Air Temperature	6															6					
Return Air Temperature	6															6					
Heating Control	6						6														
Cooling Control	12	12																			
Freezestat	6											6									
Outside/Return/Exhaust Air Damper D	6						6														
Roof Top Unit																					
Start/Stop	3	3																			
Status	3									3											
Space Temperature	3															3					
Supply Air Temperature	3															3					
Heating Control	6	6																			
Cooling Control	6	6																			
Freezestat	3											3									
Outside/Return Air Dampers	3						3														
Hot Water Boiler																					
Enable/Disable	3	3																			
Status	3												3								
Outside Air Conditions	3															3					
Boiler Trouble Critical Alarm	6											3									
Hot Water Supply Temperature	6															3					
Hot Water Return Temperature	6															3					
Heating Hot Water Circ.Pump																					
Enable/Disable	2	2																			
Status	2									2											
Totals	276	**67**	**0**	**0**	**0**	**0**	**18**	**0**	**38**	**30**	**0**	**31**	**3**	**0**	**0**	**80**	**0**	**0**	**0**	**0**	

Kennedy ES

Point Description	Total Points	Hardware																			
		Outputs								Inputs											
		Digital				Analog				Digital						Analog					
		Relay	Contactor	Solenoid	E/P switch	P/E	E/P Xdcr	Speed Reference	0-10VDC/4-20mA	Current Switch	Pressure Switch	Dry Contact	Flame Fail	Flow switch	CO2 Sensor	Temperature	Humidity	Pressure	Flow Rate		
New control points to be installed																					
Perimeter Radiation Zone																					
Space Temperature	7															7					
Heating Control	7						7														
Exhaust Fan(panel in boiler room)																					
Start/Stop	7	7																			
Vertical Heat Pump Unit																					
On/Off	3	3																			
Cabinet Unit Heaters																					
Start/Stop	7	7																			
Space Temperature	7															7					
Heating Control	7				7																
H&V Unit (MP Room)																					
Start/Stop	1	1																			
Status	1									1											
Space Temperature	1															1					
Supply Air Temperature	1															1					
Heating Control	1						1														
Freezestat	1											1									
Outside/Return Air Damper	1						1														
AHU (Music and Media Center)																					
Start/Stop	2	2																			
Status	2									2											
Space Temperature	2															2					
Supply Air Temperature	2															2					
Heating Control	2						2														
Cooling Control	2						2														
Freezestat	2											2									
Outside/Return Air Dampers	2						2														
Hot Water Boiler																					
Enable/Disable	2	2																			
Status	2									2											
3-Way mixing valve	1						1														
Boiler Trouble Critical Alarm	2											2									
Outside Air Conditions	1															1					
Hot Water Supply Temperature	1															1					
Hot Water Return Temperature	1															1					
Heating Hot Water Circulation Pump																					
Enable/Disable	2	2																			
Status	2									2											
Totals	**82**	**24**	**0**	**0**	**7**	**0**	**16**	**0**	**0**	**7**	**0**	**5**	**0**	**0**	**0**	**23**	**0**	**0**	**0**	**0**	

Lafayette ES

Point Description	Total Points	Hardware																			
		Outputs								Inputs											
		Digital				Analog				Digital						Analog					
		Relay	Contactor	Solenoid	E/P switch	P/E	E/P Xdcr	Speed Reference	0-10VDC/4-20mA	Current Switch	Pressure Switch	Dry Contact	Flame Fail	Flow switch	CO2 Sensor	Temperature	Humidity	Pressure	Flow Rate		
New control points to be installed																					
Pnuematic Zones																					
Space Temperature	3															3					
Heating Control	3						3														
Exhaust Fan																					
Start/Stop	19	19																			
Vertical Heat Pump Unit																					
On/Off	4	4																			
Cabinet Unit Heaters																					
Start/Stop	10	10																			
Space Temperature	10															10					
Heating Control	10						10														
L.P. Steam Boiler																					
Enable/Disable	2	2																			
Status	2									2											
Boiler Trouble Critical Alarm	2											2									
Outside Air Conditions	1															1					
Steam Header Pressure	1																	1			
HW Converter																					
Converter Steam Control Valve	1						1														
3-Way Control Valve	1						1														
Converter Hot Water Supply Temp.	1															1					
Converter Hot Water Return Temp.	1															1					
Converter Water Circ.Pump																					
Enable/Disable	2	2																			
Status	2									2											
Totals	**75**	**37**	**0**	**0**	**0**	**0**	**15**	**0**	**0**	**4**	**0**	**2**	**0**	**0**	**0**	**16**	**0**	**1**	**0**	**0**	

Packanack ES

Point Description	Total Points	Hardware: Outputs: Digital: Relay	Contactor	Solenoid	E/P switch	Analog: P/E	E/P Xdcr	Speed Reference	0-10VDC/4-20mA	Inputs: Digital: Current Switch	Pressure Switch	Dry Contact	Flame Fail	Flow switch	CO2 Sensor	Analog: Temperature	Humidity (0-5VDC)	Pressure (4-20mA)	Flow Rate	
New control points to be installed																				
Perimeter Radiation Zone																				
Space Temperature	5															5				
Heating Control	5						5													
Exhaust Fan																				
Start/Stop	7	7																		
Vertical Heat Pump Unit																				
On/Off	4	4																		
Cabinet Unit Heaters																				
Start/Stop	10	10																		
Space Temperature	10															10				
Heating Control Valve	10				10															
Air Handling Unit (McQuay)																				
Start/Stop	1	1																		
Status	1									1										
Supply Air Temperature	1															1				
Mixed Air Temperature	1															1				
Return Air Temperature	1															1				
Heating Control	1						1													
Cooling Control	1						1													
Freezestat	1											1								
Outside/Return Air Dampers	1						1													
L.P. Steam Boiler																				
Enable/Disable	3	3																		
Status	3												3							
Boiler Trouble Critical Alarm	3											3								
Steam Header Pressure	2																	1		
Outside Air Conditions	1															1				

Pines Lake ES

Point Description	Total Points	Hardware: Outputs: Digital: Relay	Contactor	Solenoid	E/P switch	Analog: P/E	E/P Xdcr	Speed Reference	0-10VDC/4-20mA	Inputs: Digital: Current Switch	Pressure Switch	Dry Contact	Flame Fail	Flow switch	CO2 Sensor	Analog: Temperature	Humidity	Pressure	Flow Rate	
New control points to be installed																				
Exhaust Fan																				
Start/Stop	19	19																		
Vertical Heat Pump Unit																				
On/Off	9	9																		
H&V Unit																				
Start/Stop	2	2																		
Status	2									2										
Space Temperature	2															2				
Supply Air Temperature	2															2				
Heating Control	2						2													
Freezestat	2											2								
Outdoor/Return Air Damper	2						2													
Air Handling Unit																				
Start/Stop	2	2																		
Status	2									2										
Space Temperature	2															2				
Supply Air Temperature	2															2				
Heating Control	2						2													
Cooling Control	4	4																		
Freezestat	2											2								
Outdoor/Return Air Damper	2						2													
L.P. Steam Boiler																				
Enable/Disable	2	2																		
Status	2												2							
Boiler Trouble Critical Alarm	2											2								
Outside Air Conditions	1															1				
Steam Zone Valve	1						1													
Steam Header Pressure	1																	1		
HW Converter																				
Converter Steam Control Valve	1						1													
3-Way Control Valve	1						1													
Converter Hot Water Supply Temp.	1															1				
Converter Hot Water Return Temp.	1															1				
Converter Water Circ.Pump																				
Enable/Disable	2	2																		
Status	2									2										
Totals	**77**	**40**	**0**	**0**	**0**	**0**	**11**	**0**	**0**	**6**	**0**	**6**	**2**	**0**	**0**	**11**	**0**	**1**	**0**	**0**

Ryerson ES

Point Description	Total Points	Hardware																			
		Outputs								Inputs											
		Digital				Analog				Digital						Analog					
		Relay	Contactor	Solenoid	E/P switch	P/E	E/P Xdcr	Speed Reference	0-10VDC/4-20mA	Current Switch	Pressure Switch	Dry Contact	Flame Fail	Flow switch	CO2 Sensor	Temperature	Humidity	Pressure	Flow Rate		
New control points to be installed																					
Perimeter Rad.Zone(all in boiler room)																					
Space Temperature	5															5					
Heating Control	5						5														
Exhaust Fan																					
Start/Stop	6	6																			
Cabinet Unit Heaters																					
Start/Stop	4	4																			
Space Temperature	4															4					
Heating Control	4						4														
Heating and Ventilating Unit																					
Start/Stop	1	1																			
Status	1									1											
Space Temperature	3															3					
Supply Air Temperature	1															1					
Heating Control Valve	1						1														
Freezestat	1											1									
Outside/Return Air Damper	1						1														
Hot Water Boiler																					
Enable/Disable	2	2																			
Status	2												2								
Boiler Trouble Critical Alarm	2											2									
Hot Water Supply Temperature	1															1					
Hot Water Return Temperature	1															1					
Outside Air Conditions	1															1					
Heating Hot Water Circ.Pump																					
Enable/Disable	4	4																			
Status	4									4											
Existing DDC (Metasys)																					
RTU (AAON-Media Center)																					
Start/Stop	1	1																			
Status	1									1											
Space Temperature	1															1					
Supply Air Temperature	1															1					
Heating Control Valve	1						1														
Cooling Control Valve	1						1														
Freezestat	1											1									
Outdoor/Return Air Damper	1						1														
Totals	**62**	**18**	**0**	**0**	**0**	**0**	**14**	**0**	**0**	**6**	**0**	**4**	**2**	**0**	**0**	**18**	**0**	**0**	**0**	**0**	

Terhune ES

Point Description	Total Points	Hardware																			
		Outputs								Inputs											
		Digital				Analog				Digital						Analog					
		Relay	Contactor	Solenoid	E/P switch	P/E	E/P Xdcr	Speed Reference	0-10VDC/4-20mA	Current Switch	Pressure Switch	Dry Contact	Flame Fail	Flow switch	CO2 Sensor	Temperature	Humidity	Pressure	Flow Rate		
New control points to be installed																					
Perimeter Radiation Zone																					
Space Temperature	7															7					
Heating Control	7						7														
Exhaust Fan																					
Start/Stop	9	9																			
DX Split System(Airedale HP)																					
On/Off	6	6																			
Cabinet Unit Heaters																					
Start/Stop	4	4																			
Space Temperature	4															4					
Heating Control	4						4														
Dayton Elec. Heaters																					
Start/Stop	3	3																			
Space Temperature	3															3					
H&V Unit (Gym and Cafeteria)																					
Start/Stop	2	2																			
Status	2									2											
Space Temperature	2															2					
Supply Air Temperature	2															2					
Heating Control	2						2														
Freezestat	2											2									
Outside/Return Air Damper	2						2														
Air Handling Unit																					
Start/Stop	1	1																			
Status	1									1											
Space Temperature	1															1					
Supply Air Temperature	1															1					
Heating Control	1						1														
Cooling Control	1						1														
Freezestat	1											1									
Outside/Return Air Dampers	1						1														
Hot Water Boiler																					
Enable/Disable	2	2																			
Status	2												2								
Boiler Trouble Critical Alarm	2											2									
3-Way mixing valve (hot water reeset)	1						1														
Hot Water Supply Temperature	1															1					
Hot Water Return Temperature	1															1					
Outside Air Conditions	1															1					
Pneumatic Zones																					
Heating Control	4			4																	
Zone temperature	4															4					
Heating Hot Water Circulation Pump																					
Enable/Disable	2	2																			
Status	2									2											
Totals	**91**	**29**	**0**	**4**	**0**	**0**	**19**	**0**	**0**	**5**	**0**	**5**	**2**	**0**	**0**	**27**	**0**	**0**	**0**	**0**	

Anthony Wayne MS

Point Description	Total Points	Hardware																			
		Outputs								Inputs											
		Digital				Analog				Digital						Analog					
		Relay	Contactor	Solenoid	E/P switch	P/E	E/P Xdcr	Speed Reference	0-10VDC/4-20mA	Current Switch	Pressure Switch	Dry Contact	Flame Fail	Flow switch	CO2 Sensor	Temperature	Humidity	Pressure	Flow Rate		
Existing DDC (Metasys)																					
VAV Box																					
Start/Stop	58	58																			
Status	58									58											
Space Temperature	58															58					
Supply Air Temperature	58															58					
Heating Control	58						58														
VAV Dampers	58						58														
Perimeter Radiation Zone																					
Space Temperature	15															15					
Heating Control	15						15														
Roof Top Unit																					
Start/Stop	23	23																			
Status	23									23											
Duct Static Pressure	23																	23			
Space Temperature	23															23					
Supply/Return& Mixed Air Temperature	69															69					
Heating Control	23						23														
Cooling Control	23	23																			
Freezestat	23											23									
Outside/Return Air Dampers	23						23														
HRU (Boys & Girls Locker, Cafeteria)																					
SF Start/Stop	3	3																			
SF Status	3									3											
EF Start/Stop	3	3																			
EF Status	3									3											
Space Temperature	3															3					
Supply, Mixed,Return, Exhaust Air Temperature	12															12					
Wheel Inlet Temperature	3															3					
Freezestat	3											3									
Outside/Return/Exhaust Air DamperDamper	3						3														
Exhaust Fan																					
Start/Stop	32	32																			
Status	32									32											
Hot Water Boiler																					
Enable/Disable	4	4																			
Status	4									4											
Boiler Trouble Critical Alarm	4											4									
Outside Air Conditions	1															1					
Hot Water Supply Temperature	1															1					
Hot Water Return Temperature	1															1					
Heating Hot Water Circulation Pump																					
Enable/Disable	4	4																			
Status	4									4											
Totals	**754**	**150**	**0**	**0**	**0**	**0**	**180**	**0**	**0**	**127**	**0**	**30**	**0**	**0**	**0**	**244**	**0**	**23**	**0**	**0**	

Schuyler-Colfax MS

Point Description	Total Points	Hardware																			
		Outputs								Inputs											
		Digital				Analog				Digital						Analog					
		Relay	Contactor	Solenoid	E/P switch	P/E	E/P Xdcr	Speed Reference	0-10VDC/4-20mA	Current Switch	Pressure Switch	Dry Contact	Flame Fail	Flow switch	CO2 Sensor	Temperature	Humidity	Pressure	Flow Rate		
Existing DDC (Metasys)																					
Unit Ventilator																					
Start/Stop	29	29																			
Status	29									29											
Space Temperature	29															29					
Supply Air Temperature	29															29					
Heating Control	29								29												
Freezestat	29	29																			
Outdoor/Return Air Damper	29								29												
Heating and Ventilating Unit																					
Start/Stop	19	19																			
Status	19									19											
Space Temperature	19															19					
Supply Air Temperature	19															19					
Heating Control	19						19														
Freezestat	19											19									
Outside/Return Air Damper	19						19														
Roof Top Unit																					
Start/Stop	3	3																			
Status	3									3											
Space Temperature	3															3					
Supply Air Temperature	3															3					
Heating Control	3						3														
Cooling Control	3	3																			
Freezestat	3											3									
Outdoor/Return Air Damper	3						3														
Hot Water Boiler																					
Enable/Disable	2	2																			
Status	2									2											
Boiler Trouble Critical Alarm	2											2									
3-way mixing valve	1						1														
Outside Air Conditions	1															1					
Hot Water Supply Temperature	1															1					
Hot Water Return Temperature	1															1					
Heating Hot Water Circulation Pump																					
Enable/Disable	5	5																			
Status	5									5											
Totals	**380**	**32**	**0**	**0**	**0**	**0**	**45**	**0**	**0**	**29**	**0**	**24**	**0**	**0**	**0**	**47**	**0**	**0**	**0**	**0**	

Washington MS

Point Description	Total Points	Hardware																				
		Outputs								Inputs												
		Digital				Analog				Digital						Analog						
		Relay	Contactor	Solenoid	E/P switch	P/E	E/P Xdcr	Speed Reference	0-10VDC/4-20mA	Current Switch	Pressure Switch	Dry Contact	Flame Fail	Flow switch	CO2 Sensor	Temperature	Humidity	Pressure	Flow Rate			
New control points to be installed																						
Perimeter Radiation Zone																						
Space Temperature	16															16						
Heating Control	16						16															
Exhaust Fan (16 in boiler room)																						
Start/Stop	16	16																				
Cabinet Unit Heaters																						
Start/Stop	15	15																				
Space Temperature	15															15						
Heating Control	15						15															
Heating and Ventilating Unit																						
Start/Stop	8	8																				
Status	8									8												
Space Temperature	8															8						
Supply Air Temperature	8															8						
Heating Control	8						8															
Freezestat	8											8										
Outside/Return Air Damper	8						8															
Air Handling Unit																						
Start/Stop	3	3																				
Status	3									3												
Space Temperature	3															3						
Supply Air Temperature	3															3						
Heating Control Valve	3						3															
Cooling Control Valve	3						3															
Freezestat	3											3										
Outside/Return Air Dampers	3						3															
Hot Water Boiler																						
Enable/Disable	2	2																				
Status	2									2												
Boiler Trouble Critical Alarm	2											2										
Outside Air Conditions	1															1						
Hot Water Supply Temperature	1															1						
Hot Water Return Temperature	1															1						
Pnuematic Zones	8															8						
Heating Hot Water Circ.Pump																						
Enable/Disable	3	3																				
Status	3									3												
Totals	**196**	**47**	**0**	**0**	**0**	**0**	**56**	**0**	**0**	**16**	**0**	**13**	**0**	**0**	**0**	**64**	**0**	**0**	**0**	**0**		

Wayne Hills HS

Point Description	Total Points	Hardware																			
		Outputs								Inputs											
		Digital				Analog				Digital						Analog					
		Relay	Contactor	Solenoid	E/P switch	P/E	E/P Xdcr	Speed Reference	0-10VDC/4-20mA	Current Switch	Pressure Switch	Dry Contact	Flame Fail	Flow switch	CO2 Sensor	Temperature	Humidity	Pressure	Flow Rate		
New control points to be installed																					
Perimeter Radiation Zone																					
Space Temperature	40															40					
Heating Control Valve	40						40														
Exhaust Fan (18 in boiler room**)**																					
Start/Stop	18	18																			
Pneumatic Zones																					
Space Temperature	12															12					
Heating Control Valve	12						12														
Cabinet Unit Heaters																					
Start/Stop	38	38																			
Space Temperature	38															38					
Heating Control	38						38														
Heating and Ventilating Unit																					
Start/Stop	6	6																			
Status	6									6											
Space Temperature	6															6					
Supply Air Temperature	6															6					
Heating Control	6						6														
Freezestat	6											6									
Outside/Return Air Damper	6						6														
Air Handling Unit																					
Start/Stop	8	8																			
Status	8									8											
Space Temperature	8															8					
Supply Air Temperature	8															8					
Heating Control	8						8														
Cooling Control	8						8														
Freezestat	8											8									
Outside/Return Air Dampers	8						8														
Roof top Units																					
Start/Stop	2	2																			
Status	2									2											
Space Temperature	2															2					
Supply Air Temperature	2															2					
Heating Control	2						2														
Cooling Control	2						2														
Freezestat	2											2									
Outside/Return Air Dampers	2						2														
Heating Hot Water Circulation Pump																					
Enable/Disable	3	3																			
Status	3									3											
Existing DDC (Metasys)																					
Unit Ventilator																					
Start/Stop	31	31																			
Status	31									31											
Space Temperature	31															31					
Supply Air Temperature	31															31					
Heating Control Valve	31								31												
Freezestat	31	31																			
Outdoor/Return Air Damper	31								31												
Perimeter Radiation Valve	31								31												
Exhaust Fan																					
Start/Stop	4	4																			
Status	4									4											
MZ Roof Top Unit (75 AAON)																					
Start/Stop	2	2																			
Status	2									2											
Space Temperature	15															15					
Supply Air Temperature	2															2					
Heating Control Valve	2						2														
Cooling Control Valve	2											2									
Freezestat	2											2									
Outdoor/Return Air Damper	2						2														
Roof top Units																					
Start/Stop	2	2																			
Status	2									2											
Space Temperature	2															2					
Supply Air Temperature	2															2					
Heating Control	2						2														
Cooling Control	2						2														
Freezestat	2											2									
Outside/Return Air Dampers	2						2														
Hot Water Boiler																					
Enable/Disable	3	3																			
Status	3									3											
Boiler Trouble Critical Alarm	3											3									
Outside Air Conditions	1															1					
Hot Water Supply Temperature	1															1					
Hot Water Return Temperature	1															1					
Heating Hot Water Circulation Pump																					
Enable/Disable	2	2																			
Status	2									2											
Chiller																					
On/Off	1	1																			
Status	1									1											
CHWS Temperature	1															1					

Wayne Hills HS

Point Description	Total Points	Hardware																			
		Outputs								Inputs											
		Digital				Analog				Digital						Analog					
		Relay	Contactor	Solenoid	E/P switch	P/E	E/P Xdcr	Speed Reference	0-10VDC/4-20mA	Current Switch	Pressure Switch	Dry Contact	Flame Fail	Flow switch	CO2 Sensor	Temperature	Humidity	Pressure	Flow Rate	
CHWR Temperature	1															1				
Remote chiller CU																				
On/Off	1	1																		
Status	1									1										
Chilled Water Pump																				
On/Off	2	2																		
Status	2									2										
Totals	**691**	**154**	**0**	**0**	**0**	**0**	**142**	**0**	**93**	**67**	**0**	**25**	**0**	**0**	**0**	**210**	**0**	**0**	**0**	**0**

Wayne Valley HS

Point Description	Total Points	Hardware																				
		Outputs								Inputs												
		Digital				Analog				Digital							Analog					
		Relay	Contactor	Solenoid	E/P switch	P/E	E/P Xdcr	Speed Reference	0-10VDC/4-20mA	Current Switch	Pressure Switch	Dry Contact	Flame Fail	Flow switch	CO2 Sensor		Temperature	Humidity	Pressure	Flow Rate		
Existing DDC (Metasys)																						
Unit Ventilators																						
Start/Stop	99	99																				
Status	99									99												
Space Temperature	99																99					
Supply Air Temperature	99																99					
Heating Control	99								99													
Freezestat	99											99										
Outside/Return Air Damper	99								99													
Exhaust Fan																						
Start/Stop	131	131																				
Heating and Ventilating Unit																						
Start/Stop	25	25																				
Status	25									25												
Space Temperature	25																25					
Supply Air Temperature	25																25					
Heating Control	25						25															
Freezestat	25											25										
Outside/Return Air Damper	25						25															
Air Handling Unit																						
Start/Stop	8	8																				
Status	8									8												
Space Temperature	8																8					
Supply Air Temperature	8																8					
Heating Control	8						8															
Cooling Control	8						8															
Freezestat	8											8										
Outside/Return Air Damper	8						8															
L.P. Steam Boiler																						
Enable/Disable	2	2																				
Status	2									2												
Boiler Trouble Critical Alarm	2											3										
Steam Header Pressure	1																		1			
Outside Air Conditions	1																1					
Pneumatic Zones																						
Space Temperature	1																1					
Steam Zone Valve	1						1															
Hot Water Boiler																						
Enable/Disable	2	2																				
Status	2									2												
Hot Water Supply Temperature	1																1					
Hot Water Return Temperature	1																1					
Heating Hot Water Circulation Pump																						
Enable/Disable	4	4																				
Status	4									4												
Vacuum Return Pump																						
Unit Enable/Disable	1	1																				
Pump Status	1									1												
HW Converter																						
3-Way Control Valve	2						2															
Converter Hot Water Supply Temperature	2																2					
Converter Hot Water Return Temperature	2																2					
Converter Water Circ. Pump																						
Enable/Disable	4	4																				
Status	4									4												
Chiller																						
On/Off	1	1																				
Status	1									1												
CHWS Temperature	1																1					
CHWR Temperature	1																1					
Chilled Water Pump																						
On/Off	2	2																				
Status	2									2												
Totals	**1111**	**279**	**0**	**0**	**0**	**0**	**77**	**0**	**198**	**148**	**0**	**135**	**0**	**0**	**0**		**274**	**0**	**1**	**0**	**0**	

Preakness

	Total Points	Hardware																				
		Outputs								Inputs												
		Digital				Analog				Digital						Analog						
		Relay	Contactor	Solenoid	E/P switch	P/E	E/P Xdcr	Speed Reference	0-10VDC/4-20mA	Current Switch	Pressure Switch	Dry Contact	Flame Fail	Flow switch	CO2 Sensor	Temperature	Humidity	Pressure	Flow Rate			
New control points to be installed																						
Exhaust Fan																						
Start/Stop	7	7																				
Roof Top Unit																						
Start/Stop	4	4																				
Status	4									4												
Space Temperature	4															4						
Supply Air Temperature	4															4						
Heating Control	4						4															
Cooling Control	4	4																				
Freezestat	4											4										
Outside/Return Air Dampers	4						4															
L.P. Steam Boiler																						
Enable/Disable	1	1																				
Status	1									1												
Boiler Trouble Critical Alarm	1											1										
Outside Air Conditions	1															1						
Steam Header Pressure	1																	1				
HW Converter																						
Converter Steam Control Valve	1						1															
3-Way Control Valve	1						1															
Converter Hot Water Supply Temp.	1															1						
Converter Hot Water Return Temp.	1															1						
Converter Water Circ.Pump																						
Enable/Disable	2	2																				
Status	2									2												
Totals	**52**	**18**	**0**	**0**	**0**	**0**	**10**	**0**	**0**	**7**	**0**	**5**	**0**	**0**	**0**	**11**	**0**	**1**	**0**	**0**		

Admin

Point Description	Total Points	Hardware																			
		Outputs								Inputs											
		Digital				Analog				Digital						Analog					
		Relay	Contactor	Solenoid	E/P switch	P/E	E/P Xdcr	Speed Reference	0-10VDC/4-20mA	Current Switch	Pressure Switch	Dry Contact	Flame Fail	Flow switch	CO2 Sensor	Temperature	Humidity	Pressure	Flow Rate		
New control points to be installed																					
Air Handling Unit																					
Start/Stop	1	1																			
Status	1									1											
Space Temperature	1															1					
Supply Air Temperature	1															1					
Heating Control	1						1														
Cooling Control	1						1														
Freezestat	1											1									
Outside/Return Air Dampers	1						1														
Hot Water Boiler																					
Enable/Disable	1	1																			
Status	1									1											
Hot Water Reset (H/W or Valve)	1						1														
Hot Water Supply Temperature	1															1					
Hot Water Return Temperature	1															1					
Outside Air Conditions	1															1					
Heating Hot Water Circulation Pump																					
Enable/Disable	2	2																			
Status	2									2											
Chiller																					
On/Off	1																				
Status	1									1											
CHWS Temperature	1															1					
CHWR Temperature	1															1					
Chilled Water Pump																					
On/Off	1	1																			
Status	1									1											
Totals	**24**	**5**	**0**	**0**	**0**	**0**	**4**	**0**	**0**	**6**	**0**	**1**	**0**	**0**	**0**	**7**	**0**	**0**	**0**	**0**	

ECM 5:
Steam Trap Replacements

ECM Overview

Ameresco has completed a survey of the Wayne Township Public Schools District's (District) steam traps and proposes to replace existing F&T steam trap internals and install new drop in inserts for existing thermostatic traps throughout the District's multiple distribution systems to improve the overall steam use and heating system efficiency. Steam distribution is accomplished at low pressure throughout the buildings that employ steam, currently with significant thermal energy waste due to failing traps. Properly functioning steam traps pass air and drain condensate formed in the steam distribution systems and prevent live steam from exiting. This measure addresses 358 existing steam traps. The improvement will result in energy and maintenance cost savings for the school district.

ECM Detail

Existing System

The steam heating systems at the Carter, Lafayette, Packanack, Pines Lake, and Valley Hill schools and the Preakness Center consist of low-pressure steam and condensate distribution piping, steam control valves, terminal equipment (steam coils, converters, radiators, heaters, etc.) and steam traps. Properly functioning steam traps pass air and drain condensate formed in the steam distribution systems and prevents live steam from exiting. The condensate is trapped and removed via various types of steam traps, each with a specific function and range of applications. Steam traps of differing design perform the task of removing condensate from various components such as drip legs, heating coils, and converters. These traps require periodic maintenance to assure proper operation.

Figure 5.1: Thermostatic Steam Traps in typical Unit Vent at Packanack ES.

Steam Trap Type	Carter	Lafayette	Packanack	Pines Lake	Wayne Valley	Preakness
Thermostatic 3/4"	37	66	40	33	59	34
3/4" F&T	19	18	2	0	6	3
1" F&T	0	6	1	2	10	2
1 ½" F&T	2	5	6	2	2	2
2" F&T	0	0	1	0	0	0
Total	58	95	50	37	77	41

"Page content is subject to Confidentiality Restrictions"

Proposed System

Ameresco proposes to replace existing F&T steam trap internals with steam trap retro fit kits and install new drop in inserts for existing thermostatic traps. This will improve the overall steam use and heating system efficiency. The scope of work will consist of reusing all existing F&T and thermostatic steam trap bodies. Any F&T or thermostatic traps that are beyond repair will be replaced with properly sized equivalents at the discretion of Ameresco. Thermostatic traps will be replaced with new drop-in elements, versus a costly replacement of the entire trap body. If repairs to the existing thermostatic traps are not feasible the trap will be replaced with a new trap. This energy conservation measure will substantially improve the overall efficiency of the steam heating systems, as well as improve the comfort level of occupants.

Equipment, Design and Construction Documentation

Equipment will be identified in submittals provided to District for approval prior to procurement. Documents will be submitted to the engineering maintenance department, for their review and comment. Upon approval, these will constitute the construction documents. Upon completion of the construction phase, the documents will be revised as needed to reflect "As-Built" conditions, and submitted in multiple to District for record.

Impact on Facility Operations and Performance

The new steam traps will provide the district with new equipment, reduce fuel consumption for the heating plants and perform a much needed maintenance of the District steam traps.

"Page content is subject to Confidentiality Restrictions"

Appendix for ECM 5: Steam Trap Replacements

I. Energy Savings Calculations

"Page content is subject to Confidentiality Restrictions"

This page is intentionally left blank.

Project Template	
Energy and Demand Savings Summary	
Measure ID:	**5**
Measure Name:	**Steam Trap Replacements**
Measure Location:	
Engineers:	

Site Name:		**Carter ES**	**Lafayette ES**	**Packanack ES**	**Pines Lake ES**	**Wayne Valley HS**	**Preakness**	**Summary**
Item	Units	Savings	Savings	Savings	Savings	Savings	Savings	
Electricity								
Energy On-Peak	kWh							0
Energy Off-Peak	kWh							0
Energy Total	kWh	0	0	0	0	0	0	0
Demand On-Peak, Monthly	kW							0.0
Demand On-Peak, Annual	kW							0.0
Demand Off-Peak, Monthly	kW							0.0
Demand Off-Peak, Annual	kW							0.0
Fossil Fuel								0
Natural Gas (NG)	Therms	1,783	3,663	2,426	1,483	3,625	1,802	14,782
Liquid Propane Gas (LPG)	Gallons							0
Steam	Mlbs							0
Fuel Oil, #2	Gallons							0
Fuel Oil, #4	Gallons							0
Fuel Oil, #6	Gallons							0
Miscellaneous	Misc							0
Water								0
Water Savings	kGallons							0
Sewer								0
Sewer Savings	kGallons							0

Project Template
Randall Carter-Elementary School
Steam Trap Replacements

Function	Trap Type	Quantity	Trap Orifice Diameter (Inches)	Steam Pressure (Psig)	Quantity of Traps Failed Open	Quantity of Traps Leaking Open	Failed Trap Steam Loss (lbs/hr)	Leaking Trap Steam Loss (lbs/hr)	Heating System Operating Hours	Blow-by Steam (Mlb/yr)	Blow-by Steam (MMBTU)
[A]	[B]	[C]	[D]	[E]	[F]	[G]	[H]	[I]	[J]	[K]	[L]
Drip	Bucket		5/32	5	0.0	0.0	0.0	0.0	2,404	0	0
Drip	3/4"		17/78	5	0.0	0.0	0.0	0.0	2,404	0	0
Process	Bucket		3/16	5	0.0	0.0	0.0	0.0	2,404	0	0
Hvac	3/4" FT	19	17/78	5	1.7	1.9	32.3	9.0	2,404	35	46
Hvac	1" FT		5/16	5	0.0	0.0	0.0	0.0	2,404	0	0
Hvac	1-1/2" FT	2	16/41	5	0.2	0.2	10.9	3.0	2,404	12	15
Hvac	2" FT		1/2	5	0.0	0.0	0.0	0.0	2,404	0	0
Rad	Thermo.	37	1/4	5	3.3	3.7	82.8	23.0	2,404	89	117
Venturi	Venturi		1/4	5	0.0	0.0	0.0	0.0	2,404	0	0
Totals		**58**			**5.2**	**5.8**	**126.0**	**35.0**		**135**	**178**

Item	Value	Units	Cell Ref	Remarks
Failed Trap Discharge Coefficient	0.50		**[D22]**	A function of hole size and geometry
Leaking Trap Discharge Coefficient	0.25		**[D23]**	A function of hole size and geometry
% of Failed Steam Traps	9%		**[D24]**	Estimated
% of Leaking Steam Traps	10%		**[D25]**	Estimated
% of Time Blow-by	35%		**[D26]**	Estimated
Heating System Efficiency	76%		**[D27]**	From Baseline
Enthalpy of Steam	1,000.0	Btu/lb	**[D28]**	Based on operating steam pressure

Cell Ref.	Comment
A	Equipment steam trap serves
B	Type of trap
C	Quantity of traps
D	Diameter of trap orifice
E	Operating steam pressure at steam trap
F	Quantity of traps failed
G	Quantity of traps leaking
H	= 3600 ÷ 70 x PI() ÷ 4 x [D22] x [D] ^2 x ([E) + 14.7) x [F]
I	= 3600 ÷ 70 x PI() ÷ 4 x [D22] x [D23] x [D] ^2 x ([E) + 14.7) x [F]
J	Hours the heating system is on.
K	= ([H] + [I]) x [J] x [D26] ÷ 1,000
L	= [K] x 1,000 x [D28] ÷ 1,000,000 ÷ [D27]

Project Template
Lafayette-Elementary School
Steam Trap Replacements

Function	Trap Type	Quantity	Trap Orifice Diameter (Inches)	Steam Pressure (Psig)	Quantity of Traps Failed Open	Quantity of Traps Leaking Open	Failed Trap Steam Loss (lbs/hr)	Leaking Trap Steam Loss (lbs/hr)	Heating System Operating Hours	Blow-by Steam (Mlb/yr)	Blow-by Steam (MMBTU)
[A]	[B]	[C]	[D]	[E]	[F]	[G]	[H]	[I]	[J]	[K]	[L]
Drip	Bucket		5/32	5	0.0	0.0	0.0	0.0	2,404	0	0
Drip	3/4"		17/78	5	0.0	0.0	0.0	0.0	2,404	0	0
Process	Bucket		3/16	5	0.0	0.0	0.0	0.0	2,404	0	0
Hvac	3/4" FT	18	17/78	5	1.6	1.8	30.6	8.5	2,404	38	50
Hvac	1" FT	6	5/16	5	0.5	0.6	21.0	5.8	2,404	26	34
Hvac	1-1/2" FT	5	16/41	5	0.5	0.5	27.2	7.6	2,404	33	44
Hvac	2" FT		1/2	5	0.0	0.0	0.0	0.0	2,404	0	0
Rad	Thermo.	66	1/4	5	5.9	6.6	147.7	41.0	2,404	181	239
Venturi	Venturi		1/4	5	0.0	0.0	0.0	0.0	2,404	0	0
Totals		**95**			**8.6**	**9.5**	**226.6**	**62.9**		**278**	**366**

Item	Value	Units	Cell Ref	Remarks
Failed Trap Discharge Coefficient	0.50		**[D22]**	A function of hole size and geometry
Leaking Trap Discharge Coefficient	0.25		**[D23]**	A function of hole size and geometry
% of Failed Steam Traps	9%		**[D24]**	Estimated
% of Leaking Steam Traps	10%		**[D25]**	Estimated
% of Time Blow-by	40%		**[D26]**	Estimated
Heating System Efficiency	76%		**[D27]**	From Baseline
Enthalpy of Steam	1,000.0	Btu/lb	**[D28]**	Based on operating steam pressure

Cell Ref.	Comment
A	Equipment steam trap serves
B	Type of trap
C	Quantity of traps
D	Diameter of trap orifice
E	Operating steam pressure at steam trap
F	Quantity of traps failed
G	Quantity of traps leaking
H	= 3600 ÷ 70 x PI() ÷ 4 x [D22] x [D] ^2 x ([E) + 14.7) x [F]
I	= 3600 ÷ 70 x PI() ÷ 4 x [D22] x [D23] x [D] ^2 x ([E) + 14.7) x [F]
J	Hours the heating system is on.
K	= ([H] + [I]) x [J] x [D26] ÷ 1,000
L	= [K] x 1,000 x [D28] ÷ 1,000,000 ÷ [D27]

Project Template
Packanack-Elementary School
Steam Trap Replacements

Function	Trap Type	Quantity	Trap Orifice Diameter (Inches)	Steam Pressure (Psig)	Quantity of Traps Failed Open	Quantity of Traps Leaking Open	Failed Trap Steam Loss (lbs/hr)	Leaking Trap Steam Loss (lbs/hr)	Heating System Operating Hours	Blow-by Steam (Mlb/yr)	Blow-by Steam (MMBTU)
[A]	[B]	[C]	[D]	[E]	[F]	[G]	[H]	[I]	[J]	[K]	[L]
Drip	Bucket		5/32	5	0.0	0.0	0.0	0.0	2,404	0	0
Drip	3/4"	2	17/78	5	0.2	0.2	3.8	0.9	2,404	5	6
Process	Bucket		3/16	5	0.0	0.0	0.0	0.0	2,404	0	0
Hvac	3/4" FT		17/78	5	0.0	0.0	0.0	0.0	2,404	0	0
Hvac	1" FT	1	5/16	5	0.1	0.1	3.9	1.0	2,404	5	6
Hvac	1-1/2" FT	6	16/41	5	0.6	0.6	36.3	9.1	2,404	44	57
Hvac	2" FT	1	1/2	5	0.1	0.1	9.9	2.5	2,404	12	16
Rad 1/2"	Thermo.	40	1/4	5	4.0	4.0	99.5	24.9	2,404	120	157
Rad 3/4"	30	0	1/4	5	0.0	0.0	0.0	0.0	2,404	0	0
Totals		**50**			**5.0**	**5.0**	**153.4**	**38.3**		**184**	**243**

Item	Value	Units	Cell Ref	Remarks
Failed Trap Discharge Coefficient	0.50		**[D22]**	A function of hole size and geometry
Leaking Trap Discharge Coefficient	0.25		**[D23]**	A function of hole size and geometry
% of Failed Steam Traps	10%		**[D24]**	Estimated
% of Leaking Steam Traps	10%		**[D25]**	Estimated
% of Time Blow-by	40%		**[D26]**	Estimated
Heating System Efficiency	76%		**[D27]**	From Baseline
Enthalpy of Steam	1,000.0	Btu/lb	**[D28]**	Based on operating steam pressure

Cell Ref.	Comment
A	Equipment steam trap serves
B	Type of trap
C	Quantity of traps
D	Diameter of trap orifice
E	Operating steam pressure at steam trap
F	Quantity of traps failed
G	Quantity of traps leaking
H	= 3600 ÷ 70 x PI() ÷ 4 x [D22] x [D] ^2 x ([E) + 14.7) x [F]
I	= 3600 ÷ 70 x PI() ÷ 4 x [D22] x [D23] x [D] ^2 x ([E) + 14.7) x [F]
J	Hours the heating system is on.
K	= ([H] + [I]) x [J] x [D26] ÷ 1,000
L	= [K] x 1,000 x [D28] ÷ 1,000,000 ÷ [D27]

Project Template
Pines Lake-Elementary School
Steam Trap Replacements

Function	Trap Type	Quantity	Trap Orifice Diameter (Inches)	Steam Pressure (Psig)	Quantity of Traps Failed Open	Quantity of Traps Leaking Open	Failed Trap Steam Loss (lbs/hr)	Leaking Trap Steam Loss (lbs/hr)	Heating System Operating Hours	Blow-by Steam (Mlb/yr)	Blow-by Steam (MMBTU)
[A]	[B]	[C]	[D]	[E]	[F]	[G]	[H]	[I]	[J]	[K]	[L]
Drip	Bucket		5/32	5	0.0	0.0	0.0	0.0	2,404	0	0
Drip	3/4"		17/78	5	0.0	0.0	0.0	0.0	2,404	0	0
Process	Bucket		3/16	5	0.0	0.0	0.0	0.0	2,404	0	0
Hvac	3/4" FT		17/78	5	0.0	0.0	0.0	0.0	2,404	0	0
Hvac	1" FT	2	5/16	5	0.2	0.2	7.0	1.9	2,404	9	11
Hvac	1-1/2" FT	2	16/41	5	0.2	0.2	10.9	3.0	2,404	13	18
Hvac	2" FT		1/2	5	0.0	0.0	0.0	0.0	2,404	0	0
Rad	Thermo.	33	1/4	5	3.0	3.3	73.9	20.5	2,404	91	119
Venturi	Venturi		1/4	5	0.0	0.0	0.0	0.0	2,404	0	0
Totals		**37**			**3.3**	**3.7**	**91.8**	**25.5**		**113**	**148**

Item	Value	Units	Cell Ref	Remarks
Failed Trap Discharge Coefficient	0.50		**[D22]**	A function of hole size and geometry
Leaking Trap Discharge Coefficient	0.25		**[D23]**	A function of hole size and geometry
% of Failed Steam Traps	9%		**[D24]**	Estimated
% of Leaking Steam Traps	10%		**[D25]**	Estimated
% of Time Blow-by	40%		**[D26]**	Estimated
Heating System Efficiency	76%		**[D27]**	From Baseline
Enthalpy of Steam	1,000.0	Btu/lb	**[D28]**	Based on operating steam pressure

Cell Ref.	Comment
A	Equipment steam trap serves
B	Type of trap
C	Quantity of traps
D	Diameter of trap orifice
E	Operating steam pressure at steam trap
F	Quantity of traps failed
G	Quantity of traps leaking
H	= 3600 ÷ 70 x PI() ÷ 4 x [D22] x [D] ^2 x ([E) + 14.7) x [F]
I	= 3600 ÷ 70 x PI() ÷ 4 x [D22] x [D23] x [D] ^2 x ([E) + 14.7) x [F]
J	Hours the heating system is on.
K	= ([H] + [I]) x [J] x [D26] ÷ 1,000
L	= [K] x 1,000 x [D28] ÷ 1,000,000 ÷ [D27]

Project Template
Wayne Valley-High School
Steam Trap Replacements

Function	Trap Type	Quantity	Trap Orifice Diameter (Inches)	Steam Pressure (Psig)	Quantity of Traps Failed Open	Quantity of Traps Leaking Open	Failed Trap Steam Loss (lbs/hr)	Leaking Trap Steam Loss (lbs/hr)	Heating System Operating Hours	Blow-by Steam (Mlb/yr)	Blow-by Steam (MMBTU)
[A]	[B]	[C]	[D]	[E]	[F]	[G]	[H]	[I]	[J]	[K]	[L]
Drip	Bucket		5/32	5	0.0	0.0	0.0	0.0	2,404	0	0
Drip	3/4"	3	17/78	5	0.3	0.3	5.7	1.4	2,404	8	10
Process	Bucket		3/16	5	0.0	0.0	0.0	0.0	2,404	0	0
Hvac	3/4" FT	3	17/78	5	0.3	0.3	5.7	1.4	2,404	8	10
Hvac	1" FT	10	5/16	5	1.0	1.0	39.0	9.7	2,404	53	68
Hvac	1-1/2" FT	2	16/41	5	0.2	0.2	12.1	3.0	2,404	16	21
Hvac	2" FT		1/2	5	0.0	0.0	0.0	0.0	2,404	0	0
Rad	Thermo.	56	1/4	5	5.6	5.6	139.3	34.8	2,404	188	241
Venturi	Venturi	3	1/4	5	0.3	0.3	7.5	1.9	2,404	10	13
Totals		**77**			**7.7**	**7.7**	**209.1**	**52.3**		**283**	**362**

Item	Value	Units	Cell Ref	Remarks
Failed Trap Discharge Coefficient	0.50		**[D22]**	A function of hole size and geometry
Leaking Trap Discharge Coefficient	0.25		**[D23]**	A function of hole size and geometry
% of Failed Steam Traps	10%		**[D24]**	Estimated
% of Leaking Steam Traps	10%		**[D25]**	Estimated
% of Time Blow-by	45%		**[D26]**	Estimated
Heating System Efficiency	78%		**[D27]**	From Baseline
Enthalpy of Steam	1,000.0	Btu/lb	**[D28]**	Based on operating steam pressure

Cell Ref.	Comment
A	Equipment steam trap serves
B	Type of trap
C	Quantity of traps
D	Diameter of trap orifice
E	Operating steam pressure at steam trap
F	Quantity of traps failed
G	Quantity of traps leaking
H	= 3600 ÷ 70 x PI() ÷ 4 x [D22] x [D] ^2 x ([E) + 14.7) x [F]
I	= 3600 ÷ 70 x PI() ÷ 4 x [D22] x [D23] x [D] ^2 x ([E) + 14.7) x [F]
J	Hours the heating system is on.
K	= ([H] + [I]) x [J] x [D26] ÷ 1,000
L	= [K] x 1,000 x [D28] ÷ 1,000,000 ÷ [D27]

Project Template
Preakness (Library Community Center)
Steam Trap Replacements

Function	Trap Type	Quantity	Trap Orifice Diameter (Inches)	Steam Pressure (Psig)	Quantity of Traps Failed Open	Quantity of Traps Leaking Open	Failed Trap Steam Loss (lbs/hr)	Leaking Trap Steam Loss (lbs/hr)	Heating System Operating Hours	Blow-by Steam (Mlb/yr)	Blow-by Steam (MMBTU)
[A]	[B]	[C]	[D]	[E]	[F]	[G]	[H]	[I]	[J]	[K]	[L]
Drip	Bucket		5/32	5	0.0	0.0	0.0	0.0	2,404	0	0
Drip	3/4"	3	17/78	5	0.3	0.3	5.1	1.4	2,404	7	9
Process	Bucket		3/16	5	0.0	0.0	0.0	0.0	2,404	0	0
Hvac	3/4" FT		17/78	5	0.0	0.0	0.0	0.0	2,404	0	0
Hvac	1" FT	2	5/16	5	0.2	0.2	7.0	1.9	2,404	10	13
Hvac	1-1/2" FT	2	16/41	5	0.2	0.2	10.9	3.0	2,404	15	20
Hvac	2" FT		1/2	5	0.0	0.0	0.0	0.0	2,404	0	0
Rad	Thermo.	25	1/4	5	2.3	2.5	55.9	15.5	2,404	77	102
Venturi	Venturi	9	1/4	5	0.8	0.9	20.1	5.6	2,404	28	37
Totals		**41**			**3.7**	**4.1**	**99.1**	**27.5**		**137**	**180**

Item	Value	Units	Cell Ref	Remarks
Failed Trap Discharge Coefficient	0.50		**[D22]**	A function of hole size and geometry
Leaking Trap Discharge Coefficient	0.25		**[D23]**	A function of hole size and geometry
% of Failed Steam Traps	9%		**[D24]**	Estimated
% of Leaking Steam Traps	10%		**[D25]**	Estimated
% of Time Blow-by	45%		**[D26]**	Estimated
Heating System Efficiency	76%		**[D27]**	From Baseline
Enthalpy of Steam	1,000.0	Btu/lb	**[D28]**	Based on operating steam pressure

Cell Ref.	Comment
A	Equipment steam trap serves
B	Type of trap
C	Quantity of traps
D	Diameter of trap orifice
E	Operating steam pressure at steam trap
F	Quantity of traps failed
G	Quantity of traps leaking
H	= 3600 ÷ 70 x PI() ÷ 4 x [D22] x [D] ^2 x ([E) + 14.7) x [F]
I	= 3600 ÷ 70 x PI() ÷ 4 x [D22] x [D23] x [D] ^2 x ([E) + 14.7) x [F]
J	Hours the heating system is on.
K	= ([H] + [I]) x [J] x [D26] ÷ 1,000
L	= [K] x 1,000 x [D28] ÷ 1,000,000 ÷ [D27]

Appendix for ECM 5:
Steam Trap Replacements

II. Manufacturer Specification Sheets

"Page content is subject to Confidentiality Restrictions"

This page is intentionally left blank.

B and BI Series Float & Thermostatic Steam Trap

Cast Iron for Horizontal Installation, With Thermostatic Air Vent

For Pressures From Vacuum to 30 psig (2 bar)...Capacities to 8,900 lb/hr (4,037 kg/hr)

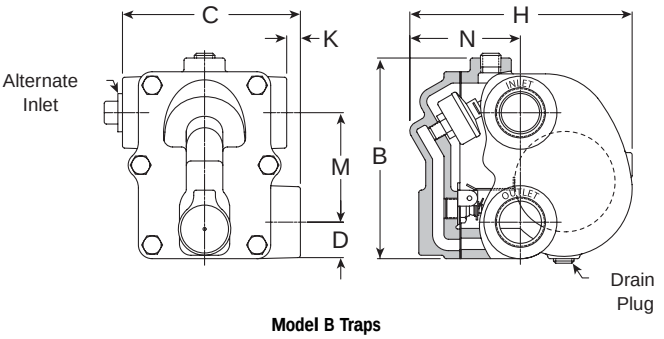

Model B Traps

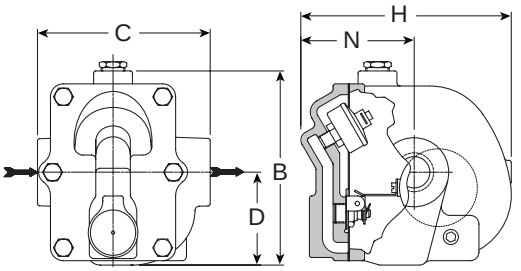

Model BI Traps

Description

Armstrong B and BI Series F&T traps combine high standards of performance and long life with economy for heating service where continuous drainage with high air-venting capacity is required.

Because of the wide use of vacuum returns in systems of this type, the thermostatic air vent element is charged to give it the capability of compensated response to the pressure-temperature curve of steam at any pressure from less than 20" (500 mm) Hg vacuum to 30 psig (2 bar) gauge. B and BI Series F&T traps will vent air at slightly below steam temperature throughout this entire range of operation.

All B Series traps, except the 1/2" (15 mm) and 3/4" (20 mm), have inlet connections on both sides of the body to provide flexibility in piping. The BI Series F&T traps in sizes 1/2", 3/4" and 1" feature the convenience of in-line connections with the same internals as the B Series.

Maximum Operating Conditions

Maximum allowable pressure (vessel design):

Model B2-B3:	125 psig @ 353°F (8.5 bar @ 178°C)
Model B4-B8:	175 psig @ 377°F (12 bar @ 191°C)

Maximum operating pressure:

15B, BI:	15 psig (1 bar) saturated steam
30B, BI:	30 psig (2 bar) saturated steam

NOTE: Cast iron traps should not be used in systems where excessive hydraulic or thermal shock are present.

Connections

Screwed NPT and BSPT

Materials

Body and cap:	ASTM A48 Class 30
Internals:	All stainless steel—304
Valve:	Stainless steel—303 or 440
Seat:	Stainless steel—303 (ASTM A582) Stainless steel—440F in 1-1/2" and 2"
Thermostatic air vent:	Stainless steel and bronze with phosphor bronze bellows, caged in stainless steel

Options

Integral vacuum breaker. Add suffix VB to model number.

CAUTION: Do not use a conventional vacuum breaker open to the atmosphere in any system that incorporates a mechanical return system that carries pressure less than atmospheric pressure. This includes all return systems designated as vacuum returns, variable vacuum returns or subatmospheric returns. If a vacuum breaker must be installed in such a system, it should be of the type that is loaded to open only when the vacuum reaches a calibrated level well in excess of the design characteristics of the system.

Specification

Float and thermostatic steam trap, type ... in cast iron, with thermostatic air vent.

For a fully detailed certified drawing, refer to CD #1167.

How to Order

Pressure	Model	Connection Size	Option
15	B	2	VB
15 30	B = Standard Connection	*2 = 1/2" *3 = 3/4" 4 = 1" 5 = 1-1/4" 6 = 1-1/2" 8 = 2"	VB = Vacuum Breaker
	BI = In-line Connection	2 = 1/2" 3 = 3/4" 4 = 1"	

*No alternate inlet available.

B and BI Series Traps

Trap Series	B Model										BI Model	
Pipe Connections	in	mm	in	mm	in	mm	in	mm	in	mm	in	mm
	1/2, 3/4	15, 20	1	25	1-1/4	32	1-1/2	40	2	50	1/2, 3/4, 1	15, 20, 25
"B" (Height)	4-7/8	124	5-1/2	140	5-1/2	140	7-7/16	189	9-5/8	244	5-5/8	143
"C" (Face to Face)	3-7/8	98	4-7/8	124	4-5/8	117	5-3/4	146	7-5/8	194	5	127
"D" (Bottom to ℄)	7/8	22.2	1	25.4	1-7/32	31.0	1-7/16	36.5	1-11/16	42.9	2-11/16	68
"H" (Width)	5-3/8	137	6	152	7-3/4	197	8-7/16	214	11-5/8	295	6-5/8	168
"K" (Connection Offset)	1/8	3.2	3/8	9.5	—	—	—	—	—	—	—	—
"M" (℄ to ℄)	2-3/4	69.8	3	76.2	3	76.2	4-3/16	106	6	152	—	—
"N" (Top to ℄)	2-9/16	65.1	3	76.2	3-3/8	85.7	3-3/4	95.2	5	127	3-9/32	83
Weight lb (kg)	6 (2.7)		8-1/2 (3.9)		11 (5.0)		19 (8.6)		40 (18.1)		9-3/4 (4.4)	

NOTE: Cast iron traps should not be used in systems where excessive hydraulic or thermal shock are present.

All dimensions and weights are approximate. Use certified print for exact dimensions. Design and materials are subject to change without notice.

Armstrong Steam and Condensate Group, 816 Maple St., Three Rivers, MI 49093 – USA Phone: (269) 273-1415 Fax: (269) 278-6555
www.armstrong-intl.com

Next

B and BI Series Float & Thermostatic Steam Trap

Cast Iron for Horizontal Installation, With Thermostatic Air Vent

For Pressures From Vacuum to 30 psig (2 bar)...Capacities to 8,900 lb/hr (4,037 kg/hr)

Model B & BI Series Capacity—15 psi

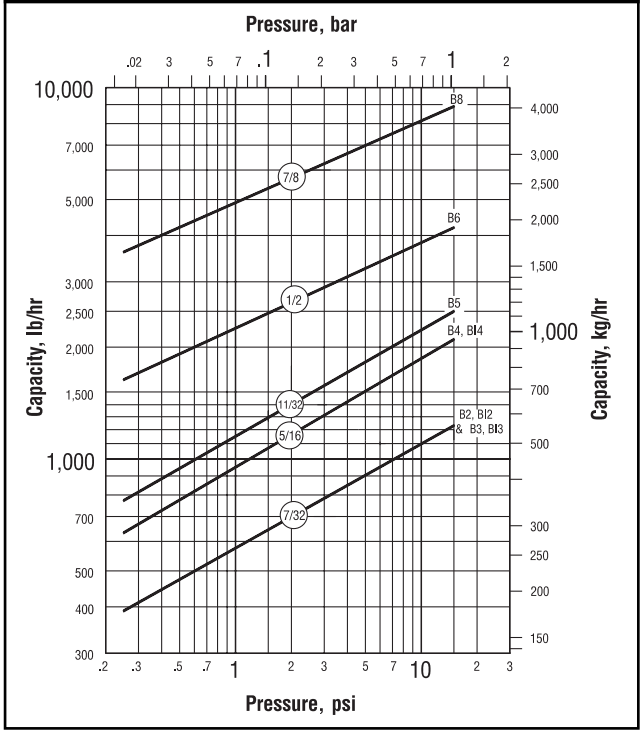

Model B & BI Series Capacity—30 psi

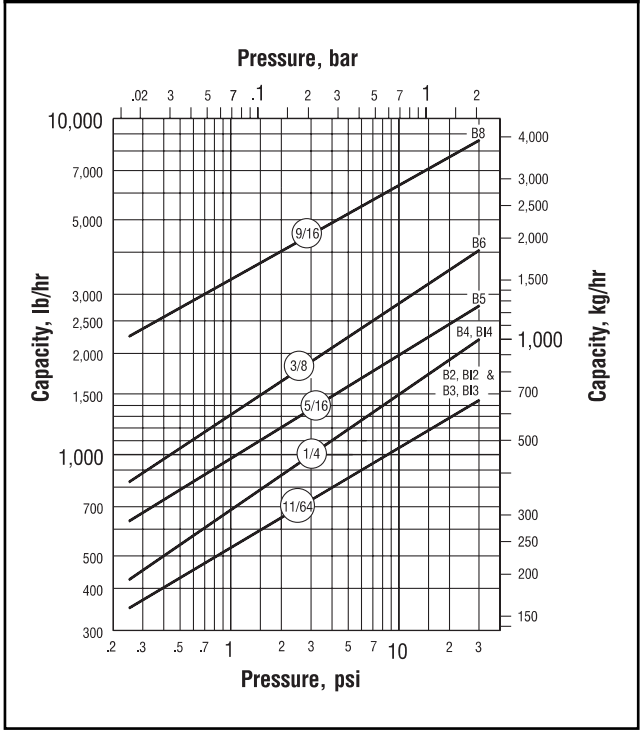

Options

Vacuum Breaker—3/8" (10 mm) and 1/2" (15 mm) NPT
Many times, condensate will be retained ahead of steam traps because of the presence of a vacuum. To break a vacuum, air must be introduced into the system by means of a vacuum breaker.

For maximum protection against freezing and water hammer in condensing equipment under modulated control, vacuum breakers are recommended. Armstrong B and BI Series F&T traps are available with integral vacuum breakers. Maximum pressure is 150 psig (10 bar).

Vacuum Breaker

Size	in	mm	in	mm
	1/2 NPT	15	3/8 NPT	10
"B" Pipe Connections	3/8 NPT	10	1/4 NPT	6
"C" Height	1-1/4	30	1-3/32	28
"D" Width	7/8 Hex	22 Hex	11/16 Hex	17 Hex

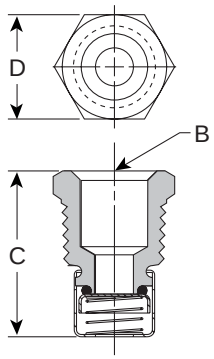

TS-2/TS-3 Radiator Traps

For Pressures to 65 psig (4.5 bar)…Capacities to 1,600 lb/hr (726 kg)

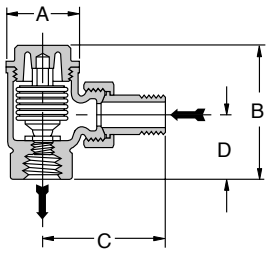

TS-2 Trap Angle Type

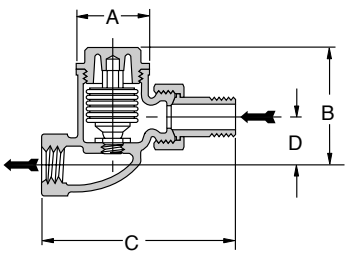

TS-2 Trap Straight Type

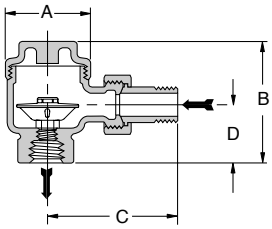

TS-3 Trap Angle Type

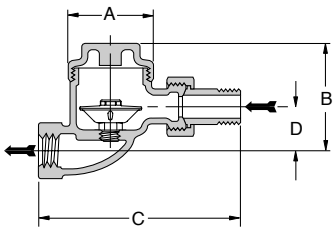

TS-3 Trap Straight Type

Armstrong Series TS radiator traps are offered in both angle and straight patterns. The TS-2 has a balanced pressure thermostatic element with a high quality multiple-convolution bellows. It's ideal for draining equipment such as steam radiators and convectors, small heat exchangers, unit heaters and steam air vents. The TS-2 comes with a strong, cast bronze body and a stainless seat. The valve and seat are renewable in-line.

The TS-3 is a heavy duty, wafer type trap for the drainage of all types of steam radiators and convectors. Its wafer design is well suited to systems prone to water hammer, which may damage conventional bellows type units. The TS-3 is repairable in-line and has an all-stainless steel wafer element.

Materials

Cap:	Bronze, ASTM B62
Body:	Bronze, ASTM B62
Union nipple:	Brass, ASTM B584
Valve:	
Model TS-2:	Brass
Model TS-3:	Stainless steel
Valve seat:	Stainless steel
Element:	
Model TS-2:	Phosphor-bronze bellows
Model TS-3:	T-316 SS Wafer w/T-304 SS Housing

For a fully detailed certified drawing, refer to:
TS-2 CDY #1045
TS-3 CDY #1046

Model TS-2/TS-3 Capacity

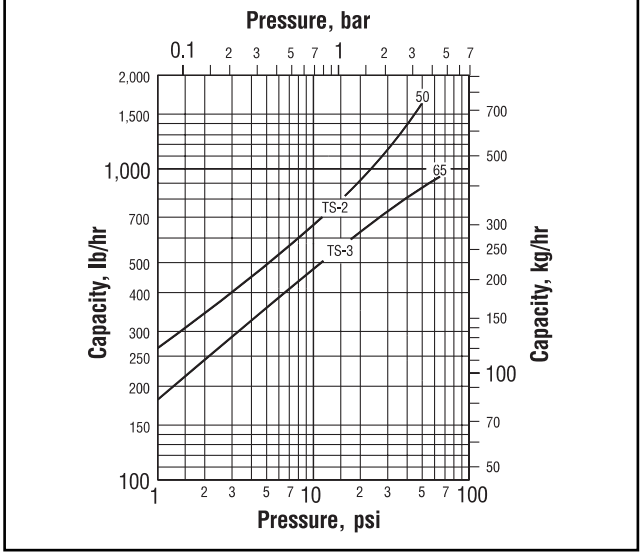

TS Series Radiator Traps

Model	TS-2								TS-3											
Type	Angle				Straight				Angle						Straight					
Pipe Connections	in	mm	in	mm	in	mm	in	mm	in	mm	in	mm	in	mm	in	mm	in	mm	in	mm
	1/2	15	3/4	20	1/2	15	3/4	20	1/2	15	3/4	20	1	25	1/2	15	3/4	20	1	25
"A" (Diameter)	1-5/8	41.3	1-5/8	41.3	1-5/8	41.3	1-5/8	41.3	2	50.8	2	50.8	2-3/8	60.3	2	50.8	2	50.8	2-3/8	60.3
"B" (Height)	2-15/16	74.6	3	76.2	2-11/16	68.3	2-7/8	73	2-7/8	73.0	3-5/8	92.1	3-7/8	98.4	2-5/8	66.7	3-3/8	85.7	3-1/2	88.9
"C"	2-9/16	65.1	2-7/8	73	4	101.6	4-1/2	114.3	3-1/8	79.4	3-1/2	88.9	4-1/8	105	4-7/8	124	5-1/4	133	6-1/2	165
"D"	1-3/8	34.9	1-5/8	41.3	1-1/8	28.6	1-5/16	33.3	1-3/8	34.9	1-5/8	41.3	2	50.8	1-1/8	28.6	1-3/8	34.9	1-5/8	41.3
Weight lb (kg)	1-1/2 (0.7)		1-3/4 (0.8)		1-1/2 (0.7)		2 (0.9)		1-1/2 (0.7)		2 (0.9)		2-1/2 (1.1)		1-1/2 (0.7)		2-1/4 (1)		3 (1.4)	

All dimensions and weights are approximate. Use certified print for exact dimensions. Design and materials are subject to change without notice.

ECM 6:
Pipe and Tank Insulation

ECM Overview

Ameresco proposes to insulate existing un-insulated hot water, steam and condensate piping in boiler rooms, mechanical spaces and basement or crawl spaces. In addition, Ameresco proposes to insulate existing un-insulated feed and condensate tanks. Installing proper insulation to piping and tanks will improve the overall efficiency of each system and alleviate over heating due to heat loss from exposed piping. Cost savings from the reduction of fossil fuel usage will result from the implementation of this measure.

Figure 6.1: un-insulated Condensate-Feed Tank and pipes at Wayne Valley HS

ECM Detail

Existing System

Ameresco found that approximately 275 ft. of existing un-insulated piping, (1) heat exchanger and (7) feed/condensate tanks. The existing piping size, length and location can be found in table 6.2. The spaces are currently un-heated and significant energy is lost through the existing pipes. These pipes appear to have never been previously insulated.

Proposed System

Ameresco proposes to install a total of 275 linear feet of insulation, and insulate (7) feed/condensate tanks in the District. The proposed insulation will be a fibrous glass type with a factory applied fire retardant vapor barrier jacket. The insulation will have a K-factor of at least 0.27 at 715°F mean temperature. Typical manufacturers include Owens-Corning, Certain-Teed, Manville or Knauf.

Scope of Work:

- Insulate steam, hot water and condensate piping with fiberglass jacketed insulation in the following facilities
- Greater than 6" NPS is to receive 3" thick fiberglass jacketed insulation
- 2" NPS to 6" NPS is to receive 2" thick fiberglass jacketed insulation
- 2" NPS or less is to receive 1" thick fiberglass jacketed insulation

"Page content is subject to Confidentiality Restrictions"

Table 6.1 Existing piping to receive new pipe insulation

Pipe Size	Carter	Lafayette	Packanack	Pines Lake	Wayne Valley	Preakness
1"	10'	70'	30'		45'	
1-1/2"				20'		15'
2"	10'		50'		25'	
Location	Boiler Room	Boiler Room	Boiler Room	Boiler Room	Boiler Room	Boiler Room

- Insulate existing non insulated feed and condensate tanks with 1" fiberglass jacketed insulation in the following school boiler rooms
- Install new 1" jacket fiber glass insulation

Table 6.2 Existing tanks to receive new pipe insulation

Location	Tank Diameter	Tank Length
Randall Carter-Elementary School	36"	5'
Lafayette-Elementary School	36"	5'
Packanack-Elementary School (Qty. 2)	24"	3'
Pines Lake-Elementary School	36"	4'
Wayne Valley-High School	36"	7'
Preakness Center	36"	4'

Table 6.2 Existing tanks to receive new pipe insulation

Equipment, Design and Construction Documentation

Equipment will be identified in submittals provided to District for approval prior to procurement. Documents will be submitted to the engineering maintenance department, for their review and comment. Upon approval, these will constitute the construction documents. Upon completion of the construction phase, the documents will be revised as needed to reflect "As-Built" conditions, and submitted in multiple to District for record.

Impact on Facility Operations and Performance

The new insulation will significantly reduce distribution losses and improve system efficiency.

Appendix for ECM 6:
Pipe and Tank Insulation

I. Energy Savings Calculations

"Page content is subject to Confidentiality Restrictions"

This page is intentionally left blank.

Project Template	
Energy and Demand Savings Summary	
Measure ID:	**6**
Measure Name:	**Pipe &Tank Insulations**
Measure Location:	
Engineers:	

Site Name:		**Carter ES**	**Lafayette ES**	**Packanack ES**	**Pines Lake ES**	**Wayne Valley HS**	**Preakness**	**Summary**
Item	Units	Savings	Savings	Savings	Savings	Savings	Savings	
Electricity								
Energy On-Peak	kWh							
Energy Off-Peak	kWh							
Energy Total	kWh							
Demand On-Peak, Monthly	kW							
Demand On-Peak, Annual	kW							
Demand Off-Peak, Monthly	kW							
Demand Off-Peak, Annual	kW							
Fossil Fuel								
Natural Gas (NG)	Therms	260	260	452	169	522	163	1,827
Liquid Propane Gas (LPG)	Gallons							
Steam	Mlbs							
Fuel Oil, #2	Gallons							
Fuel Oil, #4	Gallons							
Fuel Oil, #6	Gallons							
Miscellaneous	Misc							

Project Template
Randall Carter-Elementary Schoo
Pipe &Tank Insulation:

	Existing Piping Details												Existing Insulation Details			Proposed Insulation Details					
Location	Pipe Size (inches)	Fluid Type (Water or Steam)	Fluid Temperature (°F)	Heating Hours	Fluid Velocity (ft/s)	Length (ft)	Inside Pipe Diameter (inches)	Outside Pipe Diameter (inches)	Piping Emissivity	Pipe Conductivity (Btu/hr-ft-°F)	Cold Fluid Temperature - Air (°F)	Cold Fluid Conductivity - Air (Btu/hr-ft2-°F)	Insulation Thickness (inches)	Insulation Emissivity	Insulation Conductivity (Btu/hr-ft-°F)	Insulation Thickness (inches)	Insulation Emissivity	Insulation Conductivity (Btu/hr-ft-°F)	Existing Heat Loss (MBtu)	Proposed Heat Loss (MBtu)	Savings (MBtu)
[A]	[B]	[C]	[D]	[E]	[F]	[G]	[H]	[I]	[J]	[K]	[L]	[M]	[N]	[O]	[P]	[Q]	[R]	[S]	[T]	[U]	[V]
Heat Exchanger	3' x 10"	Steam	212.0	2,404	0.0	3.0	9.75	10.00	0.65	26.0	72.0	1.00	0.0	0.93	0.0225	2.0	0.93	0.0225	6,714	974	5,740
Feedwater Tank	5' x 36"	Water	160.0	2,404	0.0	5.0	35.75	36.00	0.65	26.0	72.0	1.00	0.0	0.93	0.0225	2.0	0.93	0.0225	19,039	3,113	15,926
Condensate Pipe	2"	Water	180.0	2,404	5.0	10.0	2.07	2.38	0.65	26.0	72.0	1.00	0.0	0.93	0.0225	2.0	0.93	0.0225	3,929	869	3,060
Hot Water Pipe	1"	Water	180.0	2,404	5.0	10.0	1.05	1.32	0.65	26.0	72.0	1.00	0.0	0.93	0.0225	1.0	0.93	0.0225	2,176	866	1,310
Totals						**28.0**													**31,857**	**5,821**	**26,037**

Cell Ref.	Comment
A	Location of Pipe
B - K	Piping properties
L - M	Cold fluid properties, typically air
N - P	Existing insulation details
Q - S	Proposed insulation details
T	= (Existing Transmission + Radiation Heat Loss) x [col E] ÷ [P65] ÷ 1,000
U	= (Proposed Transmission + Radiation Heat Loss) x [col E] ÷ [P65] ÷ 1,000
V	= [col T] - [col U]

Item	Value	Units	Cell Ref	Remarks
Heating System Efficiency	78.0%		[P65]	From Baseline

Project Template
Lafayette-Elementary Schoo
Pipe &Tank Insulation

	Existing Piping Details												Existing Insulation Details			Proposed Insulation Details					
Location	Pipe Size (inches)	Fluid Type (Water or Steam)	Fluid Temperature (°F)	Heating Hours	Fluid Velocity (ft/s)	Length (ft)	Inside Pipe Diameter (inches)	Outside Pipe Diameter (inches)	Piping Emissivity	Pipe Conductivity (Btu/hr-ft-°F)	Cold Fluid Temperature - Air (°F)	Cold Fluid Conductivity - Air (Btu/hr-ft2-°F)	Insulation Thickness (inches)	Insulation Emissivity	Insulation Conductivity (Btu/hr-ft-°F)	Insulation Thickness (inches)	Insulation Emissivity	Insulation Conductivity (Btu/hr-ft-°F)	Existing Heat Loss (MBtu)	Proposed Heat Loss (MBtu)	Savings (MBtu)
[A]	[B]	[C]	[D]	[E]	[F]	[G]	[H]	[I]	[J]	[K]	[L]	[M]	[N]	[O]	[P]	[Q]	[R]	[S]	[T]	[U]	[V]
Condensate Pipe	1.00	Water	180.0	2,477	5.0	20.0	1.05	1.32	0.63	26.0	72.0	1.00	0.0	0.93	0.0225	1.0	0.93	0.0225	4,535	1,831	2,704
Feedwater Tank	5' x 36"	Water	160.0	2,477	0.0	5.0	35.75	36.00	0.63	26.0	72.0	1.00	0.0	0.93	0.0225	2.0	0.93	0.0225	19,857	3,292	16,565
hot Water Pipe	1.00	Water	180.0	2,477	5.0	50.0	1.05	1.32	0.63	26.0	72.0	1.00	0.0	0.93	0.0225	1.0	0.93	0.0225	11,337	4,577	6,760
Totals						**75.0**													**35,728**	**9,700**	**26,029**

Cell Ref.	Comment
A	Location of Pipe
B - K	Piping properties
L - M	Cold fluid properties, typically air
N - P	Existing insulation details
Q - S	Proposed insulation details
T	= (Existing Transmission + Radiation Heat Loss) x [col E] ÷ [P65] ÷ 1,000
U	= (Proposed Transmission + Radiation Heat Loss) x [col E] ÷ [P65] ÷ 1,000
V	= [col T] - [col U]

Item	Value	Units	Cell Ref	Remarks
Heating System Efficiency	76.0%		[P65]	From Baseline

Project Template
Packanack-Elementary Schoo
Pipe &Tank Insulation

	Existing Piping Details												Existing Insulation Details			Proposed Insulation Details					
Location	Pipe Size (inches)	Fluid Type (Water or Steam)	Fluid Temperature (°F)	Heating Hours	Fluid Velocity (ft/s)	Length (ft)	Inside Pipe Diameter (inches)	Outside Pipe Diameter (inches)	Piping Emissivity	Pipe Conductivity (Btu/hr-ft-°F)	Cold Fluid Temperature - Air (°F)	Cold Fluid Conductivity - Air (Btu/hr-ft2-°F)	Insulation Thickness (inches)	Insulation Emissivity	Insulation Conductivity (Btu/hr-ft-°F)	Insulation Thickness (inches)	Insulation Emissivity	Insulation Conductivity (Btu/hr-ft-°F)	Existing Heat Loss (MBtu)	Proposed Heat Loss (MBtu)	Savings (MBtu)
[A]	[B]	[C]	[D]	[E]	[F]	[G]	[H]	[I]	[J]	[K]	[L]	[M]	[N]	[O]	[P]	[Q]	[R]	[S]	[T]	[U]	[V]
Condensate Pipe	1.00	Water	180.0	2,404	5.0	30.0	1.05	1.32	0.63	26.0	72.0	1.00	0.0	0.93	0.0225	1.0	0.93	0.0225	6,601	2,665	3,936
Condensate Pipe	2.00	Water	180.0	2,404	5.0	50.0	1.99	2.13	0.87	226.0	70.0	1.00	0.0	0.93	0.0225	2.0	0.93	0.0225	21,279	4,222	17,057
Feedwater Tank	3' x 24"	Water	160.0	2,477	0.0	5.0	35.75	24.00	0.63	26.0	72.0	1.00	0.0	0.93	0.0225	2.0	0.93	0.0225	14,378	2,280	12,098
Feedwater Tank	3' x 24"	Water	160.0	2,477	0.0	5.0	35.75	24.00	0.63	26.0	72.0	1.00	0.0	0.93	0.0225	2.0	0.93	0.0225	14,378	2,280	12,098
Totals						**90.0**													**56,636**	**11,446**	**45,190**

Cell Ref.	Comment
A	Location of Pipe
B - K	Piping properties
L - M	Cold fluid properties, typically air
N - P	Existing insulation details
Q - S	Proposed insulation details
T	= (Existing Transmission + Radiation Heat Loss) x [col E] ÷ [P65] ÷ 1,000
U	= (Proposed Transmission + Radiation Heat Loss) x [col E] ÷ [P65] ÷ 1,000
V	= [col T] - [col U]

Item	Value	Units	Cell Ref	Remarks
Heating System Efficiency	76.0%		[P65]	From Baseline

Project Template
Pines Lake-Elementary Schoo
Pipe &Tank Insulation

	Existing Piping Details												Existing Insulation Details			Proposed Insulation Details					
Location	Pipe Size (inches)	Fluid Type (Water or Steam)	Fluid Temperature (°F)	Heating Hours	Fluid Velocity (ft/s)	Length (ft)	Inside Pipe Diameter (inches)	Outside Pipe Diameter (inches)	Piping Emissivity	Pipe Conductivity (Btu/hr-ft-°F)	Cold Fluid Temperature - Air (°F)	Cold Fluid Conductivity - Air (Btu/hr-ft2-°F)	Insulation Thickness (inches)	Insulation Emissivity	Insulation Conductivity (Btu/hr-ft-°F)	Insulation Thickness (inches)	Insulation Emissivity	Insulation Conductivity (Btu/hr-ft-°F)	Existing Heat Loss (MBtu)	Proposed Heat Loss (MBtu)	Savings (MBtu)
[A]	[B]	[C]	[D]	[E]	[F]	[G]	[H]	[I]	[J]	[K]	[L]	[M]	[N]	[O]	[P]	[Q]	[R]	[S]	[T]	[U]	[V]
Feedwater Tank	4' x 36"	Water	160.0	2,404	0.0	4.0	35.50	36.00	0.63	26.0	72.0	1.00	0.0	0.93	0.0225	2.0	0.93	0.0225	15,393	2,555	12,838
Condensate Return Pipe in B.R.	1.50	Water	180.0	2,404	5.0	20.0	1.61	1.90	0.63	26.0	72.0	1.00	0.0	0.93	0.0225	1.0	0.93	0.0225	6,358	2,257	4,101
Totals						**24.0**													**21,751**	**4,812**	**16,939**

Cell Ref.	Comment
A	Location of Pipe
B - K	Piping properties
L - M	Cold fluid properties, typically air
N - P	Existing insulation details
Q - S	Proposed insulation details
T	= (Existing Transmission + Radiation Heat Loss) x [col E] ÷ [P65] ÷ 1,000
U	= (Proposed Transmission + Radiation Heat Loss) x [col E] ÷ [P65] ÷ 1,000
V	= [col T] - [col U]

Item	Value	Units	Cell Ref	Remarks
Heating System Efficiency	76.0%		[P65]	From Baseline

Project Template
Wayne Valley-High Schoo
Pipe &Tank Insulation

	Existing Piping Details												Existing Insulation Details			Proposed Insulation Details					
Location	Pipe Size (inches)	Fluid Type (Water or Steam)	Fluid Temperature (°F)	Heating Hours	Fluid Velocity (ft/s)	Length (ft)	Inside Pipe Diameter (inches)	Outside Pipe Diameter (inches)	Piping Emissivity	Pipe Conductivity (Btu/hr-ft-°F)	Cold Fluid Temperature - Air (°F)	Cold Fluid Conductivity - Air (Btu/hr-ft2-°F)	Insulation Thickness (inches)	Insulation Emissivity	Insulation Conductivity (Btu/hr-ft-°F)	Insulation Thickness (inches)	Insulation Emissivity	Insulation Conductivity (Btu/hr-ft-°F)	Existing Heat Loss (MBtu)	Proposed Heat Loss (MBtu)	Savings (MBtu)
[A]	[B]	[C]	[D]	[E]	[F]	[G]	[H]	[I]	[J]	[K]	[L]	[M]	[N]	[O]	[P]	[Q]	[R]	[S]	[T]	[U]	[V]
Steam Pipe - Crawl Under Electrical Closet	1.00	Steam	212.0	3,356	5.0	35.0	1.05	1.32	0.63	26.0	72.0	1.00	0.0	0.93	0.0225	1.0	0.93	0.0225	14,536	5,668	8,868
Condensate Pipe	2.00	Water	180.0	3,356	5.0	25.0	2.07	2.38	0.63	26.0	72.0	1.00	0.0	0.93	0.0225	2.0	0.93	0.0225	13,871	3,113	10,758
Feedwater Tank	7' x 36"	Water	160.0	3,356	0.0	7.0	35.75	36.00	0.63	26.0	72.0	1.00	0.0	0.93	0.0225	2.0	0.93	0.0225	37,669	6,245	31,425
Domestic Hot Water Pipe	1.00	Water	140.0	3,356	5.0	10.0	1.03	1.13	0.87	226.0	72.0	1.00	0.0	0.93	0.0225	1.0	0.93	0.0225	1,840	705	1,135
Totals						**77.0**													**67,916**	**15,730**	**52,186**

Cell Ref.	Comment
A	Location of Pipe
B - K	Piping properties
L - M	Cold fluid properties, typically air
N - P	Existing insulation details
Q - S	Proposed insulation details
T	= (Existing Transmission + Radiation Heat Loss) x [col E] ÷ [P65] ÷ 1,000
U	= (Proposed Transmission + Radiation Heat Loss) x [col E] ÷ [P65] ÷ 1,000
V	= [col T] - [col U]

Item	Value	Units	Cell Ref	Remarks
Heating System Efficiency	76.0%		[P65]	From Baseline

Project Template
Preakness (Library Community Center
Pipe &Tank Insulation

	Existing Piping Details												Existing Insulation Details			Proposed Insulation Details					
Location	Pipe Size (inches)	Fluid Type (Water or Steam)	Fluid Temperature (°F)	Heating Hours	Fluid Velocity (ft/s)	Length (ft)	Inside Pipe Diameter (inches)	Outside Pipe Diameter (inches)	Piping Emissivity	Pipe Conductivity (Btu/hr-ft-°F)	Cold Fluid Temperature - Air (°F)	Cold Fluid Conductivity - Air (Btu/hr-ft2-°F)	Insulation Thickness (inches)	Insulation Emissivity	Insulation Conductivity (Btu/hr-ft-°F)	Insulation Thickness (inches)	Insulation Emissivity	Insulation Conductivity (Btu/hr-ft-°F)	Existing Heat Loss (MBtu)	Proposed Heat Loss (MBtu)	Savings (MBtu)
[A]	[B]	[C]	[D]	[E]	[F]	[G]	[H]	[I]	[J]	[K]	[L]	[M]	[N]	[O]	[P]	[Q]	[R]	[S]	[T]	[U]	[V]
Feedwater Tank	4' x 36"	Water	160.0	2,467	0.0	4.0	35.50	36.00	0.63	26.0	72.0	1.00	0.0	0.93	0.0225	2.0	0.93	0.0225	15,800	2,623	13,177
Condensate Pipe	1.50	Water	180.0	2,467	5.0	15.0	1.61	1.90	0.63	26.0	72.0	1.00	0.0	0.93	0.0225	1.0	0.93	0.0225	4,894	1,738	3,157
Totals						**19.0**													**20,694**	**4,360**	**16,334**

Cell Ref.	Comment
A	Location of Pipe
B - K	Piping properties
L - M	Cold fluid properties, typically air
N - P	Existing insulation details
Q - S	Proposed insulation details
T	= (Existing Transmission + Radiation Heat Loss) x [col E] ÷ [P65] ÷ 1,000
U	= (Proposed Transmission + Radiation Heat Loss) x [col E] ÷ [P65] ÷ 1,000
V	= [col T] - [col U]

Item	Value	Units	Cell Ref	Remarks
Heating System Efficiency	76.0%		[P65]	From Baseline

Appendix for ECM 6:
Pipe and Tank Insulation

II. Manufacturer Specification Sheets

"Page content is subject to Confidentiality Restrictions"

This page is intentionally left blank.

Submittal Sheet

Fiberglas® Pipe Insulation

☐ **SSL II® All-Service Jacket (ASJ), Self-Sealing Lap**
☐ **SSL® I ASJ**
☐ **No-Wrap**

Description

Owens Corning Fiberglas® pipe insulations are molded of heavy density resin bonded inorganic glass fibers. These one-piece, 36" (914mm) long, hinged sections are opened, placed over the pipe, closed and secured by means specific to the type as described below.

Fiberglas SSL II® Pipe Insulation is jacketed with a smooth, reinforced, wrinkle-resistant all-service (ASJ) vapor retarder jacket. Factory applied DOUBLESURE† double pressure sensitive adhesive closure provides positive mechanical and vapor sealing of the longitudinal jacket seam. Pressure sensitive butt strip seals complete the positive closure. Available in the most popular sizes.

In larger sizes *Fiberglas* Pipe Insulation is furnished with SSL® I, a single adhesive lap seal.

Fiberglas "No-Wrap" Pipe Insulation is also available without a jacket. It is intended for field installation of jacketing appropriate to the vapor control, damage or corrosion resistance requirements of the application.

Uses

Insulation of hot, cold, concealed and exposed piping operating at temperatures from 0°F (-18°C) to 850°F (454°C) in commercial buildings, industrial facilities and process or power plants.

†DOUBLESURE is a registered trademark of Morgan Adhesives Company.

Features/Benefits

SSL II Positive Closure System

Effective long-term vapor sealing of both longitudinal and butt joints. With double-adhesive lap seal, plus two-part butt strip seal, positive closure is fast, neat and foolproof. No need for staples and mastic, promoting unexcelled jobsite productivity.

Jacket and Lap Shipped Adhered

Short pieces of insulation can be cut without jacket loss; it won't come apart in handling. No "dog-ears" in or out of the carton. Dust and moisture can't reach the seal. Butt strips come in sealed bags inside the carton, staying clean until the moment of use.

Excellent Thermal Performance

Fiberglas Pipe Insulation's low thermal conductivity contributes to lower operating costs of heating and cooling equipment.

Meets Model Code Fire Ratings

Flame spread rating of 25 or less, and smoke developed rating of 50 or less, usually means that *Fiberglas* Pipe Insulation will be granted immediate building code approval.

Availability

Fiberglas Pipe Insulations are available in thicknesses and for pipe sizes as follows:

Insulation Thickness,		Nominal Pipe Sizes, NPS, in. (DN, mm)					
		SSL II		SSL I*		No-Wrap**	
in.	(mm)	Pipe Insulation		Pipe Insulation*		Pipe Insulation**	
½	(13)	½-6	(15-150)			½-6	(15-150)
1	(25)	½-15	(15-375)	16-33	(400-825)	½-33	(15-825)
1½	(38)	½-14	(15-350)	15-33	(375-825)	½-33	(15-825)
2	(51)	½-12	(15-300)	14-33	(350-825)	½-33	(15-825)
2½	(64)	2-11	(50-275)	12-26	(300-650)	½-32	(15-800)
3	(76)	3-10	(75-250)	11-26, 30	(275-650, 750)	½-31	(15-900)
3½	(89)	4½-9	(115-225)	10-18, 20-22, 24	(250-450, 500-550, 600)	½-30	(15-750)
4	(102)	4½-8	(115-200)	9-21, 24, 25	(225-525, 600, 625)	½-29	(15-725)
4½	(114)	6-7	(150-175)	8-10, 12, 14, 16, 18, 20, 24	(200-250, 300, 350, 400, 450, 500, 600)	½-28	(15-700)
5	(127)	6	(150)	7-14, 16-24	(175-350, 400-600)	½-27	(15-675)
5½	(140)					6-26	(150-650)
6	(152)					6-25	(150-625)

* SSL I all made-to-order except 14" x 2" (350mm x 51mm) and 16" x 1", 11/2" and 2" (400mm x 25mm, 38mm and 51mm).
** Consult Packaging Data Supplement (PP1.P5) available upon request for standard and made-to-order sizes.

Specification Compliance

- ASTM C 547, Mineral Fiber Pre-Formed Pipe Insulation, Type I to 850˚F (454˚C)
- ASTM C 1136, Flexible Low Permeance Vapor Retarders for Thermal Insulation: All Types
- ASTM C 795, Thermal Insulation for Use Over Austenitic Stainless Steel*
- Mil. Spec. MIL-I-22344D, Insulation, Pipe, Thermal, Fibrous Glass
- Nuclear Regulatory Commission Guide 1.36, Non-Metallic Thermal Insulation*
- U.S. Coast Guard Approval No. 164.009, Noncombustible Materials (no-wrap)
- New York City MEA No. 344-83
- CAN/CGSB-51.9 – Type 1, Class 2
- NFPA 90A

* Preproduction qualification testing complete and on file. Chemical analysis of each production lot required for total conformance.

Fiberglas® Pipe Insulation

Physical Property Data

Property	Test Method	Value	
Operating temperature range	ASTM C 411	0 to 850˚F* (-18˚C to 454˚C)*	
Jacket temperature limitation	ASTM C 1136	-20˚F to 150˚F (-29˚C to 66˚C)	
Jacket permeance	ASTM E 96, Proc.A	0.02 perm	
Puncture resistance	ASTM D 781	50 units	
Composite surface burning characteristics	UL 723,** ASTM E 84** or CAN/ULC-S102-M**	Flame spread Smoke developed	25** 50

*Limited to single layer applications above 650˚F (343˚C), but not greater than 6" (152mm) thickness.

** The surface burning characteristics of these products have been determined in accordance with UL 723, ASTM E 84 or CAN/ULC-S102-M. These standards should be used to measure and describe the properties of materials, products or assemblies in response to heat and flame under controlled laboratory conditions and should not be used to describe or appraise the fire hazard or fire risk of materials, products or assemblies under actual fire conditions. However, results of this test may be used as elements of a fire risk assessment which takes into account all of the factors which are pertinent to an assessment of the fire hazard of a particular end use. Values are reported to the nearest 5 rating.

Thermal Performance, ASTM C 680

Insulation NPS x Thk. (DN x Thk. in.	mm)	Pipe Operating Temperature, ˚F (˚C) 300 (149) HL	ST	500 (280) HL	ST	700 (371) HL	ST
2 x 1½	(50 x 13)	77 (74)	128 (53)				
4 x 1	(100 x 25)	78 (75)	109 (43)				
8 x 1	(200 x 25)	140 (135)	112 (44)				
12 x 1	(300 x 25)	199 (191)	113 (45)				
2 x 1½	(50 x 38)			88 (85)	116 (47)		
4 x 1½	(100 x 38)			142 (137)	123 (51)		
8 x 1½	(200 x 38)			242 (233)	128 (53)		
12 x 1½	(300 x 38)			330 (317)	129 (54)		
2 x 2	(50 x 51)					139 (134)	127 (53)
4 x 2½	(100 x 64)					188 (181)	125 (52)
8 x 2½	(200 x 64)					295 (284)	129 (54)
12 x 3	(300 x 76)					359 (345)	125 (52)

Heat Loss (HL), Btu/hr•ft (W/m); Surface Temperature (ST), °F (°C).
Design Conditions: Horizontal piping, 80°F (27°C) average ambient temperature, 0 mph wind speed, ASJ jacket.

Thickness to Prevent Surface Condensation

Owens Corning ASJ Jacket for up to 16" NPS (400mm DN)(1), in. (mm)

Ambient Temperature, ˚F	(˚C)	Relative Humidity(2)	System Operating Temperatures 35˚F (2˚C)	45˚F (7˚C)	55˚F (13˚C)
110	(43)	50%-70%	1 (25)	1 (25)	1 (25)
		80%	1½ (38)	1½ (38)	1 (25)
		90%	3½ (89)	3 (76)	2½ (64)
100	(38)	50%-70%	1 (25)	1 (25)	1 (25)
		80%	1½ (38)	1½ (38)	1 (25)
		90%	3 (76)	3 (76)	2½ (64)
90	(32)	50%-70%	1 (25)	1 (25)	1 (25)
		80%	1½ (38)	1 (25)	1 (25)
		90%	3 (76)	2½ (64)	2 (51)
80	(27)	50%-80%	1 (25)	1 (25)	1 (25)
		90%	2½ (64)	2 (51)	1½ (38)
70	(21)	50%-80%	1 (25)	1 (25)	1 (25)
		90%	1½ (38)	1½ (38)	1 (25)

(1) For NPS (DN) greater than 16" (400mm), please contact your local Owens Corning Representative.
(2) If humidity exceeds 90%, some condensation is to be expected; therefore, a coating of a mastic or PVC jacket overwrap is recommended as repeated or continual wetting of the ASJ jacket will degrade its vapor retarder performance.

Thermal Conductivity

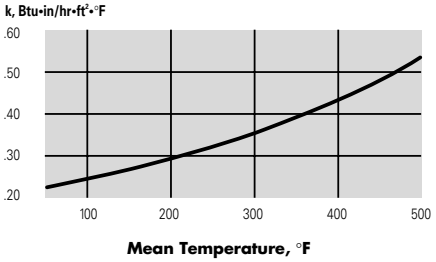

Apparent thermal conductivity curve determined in accordance with ASTM Practice C 1045 with data obtained by ASTM Test Method C 335. Values are nominal, subject to normal testing and manufacturing tolerances.

Mean Temp. ˚F	k Btu•in/hr•ft²•°F	Mean Temp. ˚C	λ W/m•˚C
50	0.22	10	0.032
75	0.23	25	0.034
100	0.24	50	0.037
150	0.27	100	0.043
200	0.29	125	0.047
250	0.32	150	0.051
300	0.35	175	0.056
350	0.39	200	0.062
400	0.43	225	0.068
450	0.48	250	0.075
500	0.54	275	0.082

Application Recommendations

The hinged sections of *Fiberglas* Pipe Insulation are opened, placed over the pipe, carefully aligned, and sealed or jacketed as required by the form of the insulation and the application.

Fiberglas SSL II Pipe Insulation is shipped with the jacket and longitudinal lap closed, the two adhesives separated by a release strip. The insulation is opened by pulling the release strip from between the two adhesive strips. The insulation is placed on the pipe, carefully aligned, and the two adhesives rubbed firmly together to close and seal. The two part butt strip seal completes the positive closure. Application may be at ambient temperatures from 25°F (-4°C) to 110°F (43°C).

Fiberglas "No-Wrap" Pipe Insulation is designed for field-jacketing with pipe covering secured by wires or bands, vapor sealed where required.

Outdoor applications must be protected from weather. If painting is required, use only water base latex paint.

OWENS CORNING WORLD HEADQUARTERS
ONE OWENS CORNING PARKWAY
TOLEDO, OHIO, USA 43659

1-800-GET-PINK
www.owenscorning.com

Fiberglas,® SSL II® and SSL® are registered trademarks of Owens Corning.

Pub. No. 5-IN-20547-D Printed in USA, June 2001

Copyright © 2001 Owens Corning.

ECM 7:
Building Envelope Improvements

ECM Overview

Ameresco proposes several insulating and air sealing measures for most building in the Wayne Township School District (District). These measures include door weather-stripping, window casing sealing, soffit and roof wall interface sealing.

Some of the exterior doors at these buildings did not have any weather-stripping creating gaps between the door jams. The new weather-stripping will greatly reduce heat loss as well as increase occupant comfort due to fewer drafts. Ameresco proposes to install low density foam insulation to the existing unsealed wall penetrations and roof wall interfaces. Existing roof wall interfaces at all schools had small air gaps which can be air sealed to minimize air infiltration.

ECM Detail

Existing System

- *Single and Double Doors:*

The weather-stripping is in need of replacement on most of the doors at most of the facilities. Due to the nature of the facilities, the doors are in constant use as students and teachers come in and out through the course of the day. Also the type of weather-stripping that was used allows air to come through the doors, even when closed tightly.

- *Entry Door Soffits:*

There are large holes into the exterior soffit over the entry doorway ceilings in some of the schools. This allows air to leak out from the facility into the space above the soffit and out through the gaps and seams of the exterior soffit.

- *Overhead Garage Doors:*

The weather-stripping on the overhead doors is worn and no longer functions correctly. The seal at the bottom of the many of the doors is not flush. This allows a large quantity of air leakage from the heated bays to the outdoors. There is also a large gap between the top of the door mechanism and the wall.

- *Roof Top Exhaust Fans:*

Typical gaps exist between roof top exhaust ducts and the area just below the roof deck allowing the vent to draw air from the space between the roof and the ceiling.

"Page content is subject to Confidentiality Restrictions"

- *Windows:*

The windows at the facilities have large gaps between the frames and exterior. The caulking at these joints has failed in a majority of places, and it is not present in others. This accounts for a significant amount of air loss throughout the year.

Proposed System

Facility ID	Door weather Stripping (Linear Feet)	Door Crack Area (sq. ft.)	Over Head Door Crack Area (sq. ft.)	Window Casing Sealing (Linear Feet)	Window Casing crack area (sq. ft.)	Soffit (Linear Feet)	Soffit Crack Area (sq. ft.)	Roof Wall Interface (Linear Feet)	Roof Wall Interface (sq. ft.)
Carter ES	103	1				38	0.7		
Dey ES	108	1.1		1,350	1.8			248	3.7
Fallon ES	139	1.4		1,748	2.3				
Kennedy ES	71	0.7		1,342	3.5	116	0.7	116	2.9
Lafayette ES	66	0.8		200	0.3	83	2.2	184	4.5
Packanack ES	85	0.8		2,600	2.2			372	9.1
Pines Lake ES	318	2.8				15	0.2	1,206	15
Ryerson ES	75	0.8				10	0.1	166	2
Terhune ES	108	1.2	7	1,312	1.7			588	9
Wayne MS	126	1.3						720	16
Colfax MS	444	3.2				66	1.8	192	3.7
Washington MS	250	2.4				90	2.5	693	10.5
Hills HS	480	4.2				121	0.3	2,281	38
Valley HS	1273	4.5		87		191	6.3	1,027	17.5
Preakness Center	326	2.8							
Administration	3	0.1						756	13.1
Administration	60	0.3	0.0	1,836	0.8	0	0.0	0	0.0
Total	3,975	29.1	7	8,639	11.8	730	14.8	8,549	145

Table 7.1: Proposed Doors and Linear Feet to be Air Sealed.

- *Single and Double Doors:*

New weather-stripping will be installed.

- *Entry Door Soffits:*

When access is available, the solution will be to seal the gap at the envelope plane. When access is not available, the gaps in the soffit will be sealed.

- *Overhead Garage Doors:*

New weather-stripping will be installed that will maintain a flush and complete seal around the door. The gap at the top of the door will also be sealed.

Ameresco excludes the repair of any existing of any doors, windows, sills, headers, rot, cutting, patching paint and mortar. Also the removal and disposal of any hazardous materials associated with this work.

Equipment, Design and Construction Documentation

Equipment will be identified in submittals provided to District for approval prior to procurement. Documents will be submitted to the engineering maintenance department, for their review and comment. Upon approval, these will constitute the construction documents. Upon completion of the construction phase, the documents will be revised as needed to reflect "As-Built" conditions, and submitted in multiple to District for record.

Impact on Facility Operations and Performance

The new weather-stripping and window caulking will enhance facility operations by reducing infiltration that causes drafts during the winter. Students, teachers and administrators will notice a more comfortable environment, which will be more conducive to a learning environment. In addition, the new weather-stripping will have no adverse effects on door operation or office environment.

"Page content is subject to Confidentiality Restrictions"

This page is intentionally left blank.

Appendix for ECM 7:
Building Envelope Improvements

I. Energy Savings Calculations

This page is intentionally left blank.

Project Template	
Energy and Demand Savings Summary	
Measure ID:	**7**
Measure Name:	**Building Envelope Improvements**
Measure Location:	
Engineers:	

Site Name:		**Carter ES**	**Dey ES**	**Fallon ES**	**Kennedy ES**	**Lafayette ES**	**Packanack ES**	**Pines Lake ES**	**Ryerson ES**	**Terhune ES**	**Anthony Wayne MS**	**Colfax MS**	**Washington MS**	**Wayne Hills HS**	**Wayne Valley HS**	**Preakness**	**Admin**	**Summary**
Item	Units	Savings	Savings	Savings	Savings	Savings	Savings	Savings	Savings	Savings	Savings	Savings	Savings	Savings	Savings	Savings	Savings	
Electricity																		
Energy On-Peak	kWh	7	28	80	34	120	19	414	22	26	1,284	77	204	596	84	29	574	3,597
Energy Off-Peak	kWh																	0
Energy Total	kWh	7	28	80	34	120	19	414	22	26	1,284	77	204	596	84	29	574	3,597
Demand On-Peak, Monthly	kW																	0.0
Demand On-Peak, Annual	kW																	0.0
Demand Off-Peak, Monthly	kW																	0.0
Demand Off-Peak, Annual	kW																	0.0
Fossil Fuel																		0
Natural Gas (NG)	Therms	264	799	514	654	990	2,508	3,730	620	990	4,077	1,968	3,626	5,406	3,022	602	1,636	31,406
Liquid Propane Gas (LPG)	Gallons																	0
Steam	Mlbs																	0
Fuel Oil, #2	Gallons																	0
Fuel Oil, #4	Gallons																	0
Fuel Oil, #6	Gallons																	0
Miscellaneous	Misc																	0
Water																		0
Water Savings	kGallons																	0
Sewer																		0
Sewer Savings	kGallons																	0

Project Template
Randall Carter-Elementary School
Building Envelope Improvements

TMY-2 Weather Data for Newark, NJ								Operating Hours				Savings								
Amb. Temp Bin deg. F	Ave Temp deg. F	M.C.W.B deg. F	M.C. Enthalpy Btu/lbma	01-08 Hours	09-16 Hours	17-24 Hours	Total Bin Hours	Occ On-Peak Hrs.	UnOcc On-Peak Hrs.	Occ Off-Peak Hrs.	UnOcc Off-Peak Hrs.	Total Crack Area (ft^2)	Average Wind Speed (MPH)	Infiltration Flow Rate (CFM)	Occ. Heating / Cooling Savings (MBH)	UnOcc. Heating / Cooling Savings (MBH)	Occ. Cooling Savings (MMBTU)	UnOcc. Cooling Savings (MMBTU)	Occ. Heating Savings (MMBTU)	UnOcc. Heating Savings (MMBTU)
A	**B**	**C**	**D**	**E**	**F**	**G**	**H**	**I**	**J**	**K**	**L**	**M**	**N**	**O**	**P**	**Q**	**R**	**S**	**T**	**U**
Cooling																				
105 to 110	107.5	0.0	0.0	0	0	0	0	0	0	0	0	1.7	7.8	174	6	4	0	0		
100 to 105	102.5	0.0	0.0	0	0	0	0	0	0	0	0	1.7	7.8	174	5	3	0	0		
95 to 100	97.5	72.2	35.7	0	5	1	6	1	1	0	4	1.7	7.8	174	4	2	0	0		
90 to 95	92.5	73.8	37.3	0	33	7	40	8	8	0	24	1.7	7.8	174	3	1	0	0		
85 to 90	87.5	71.3	35.1	0	92	30	122	25	25	0	73	1.7	7.8	174	3	0	0	0		
80 to 85	82.5	69.2	33.2	8	330	162	500	100	102	0	298	1.7	7.8	174	2	0	0	0		
75 to 80	77.5	67.4	31.8	98	257	265	620	125	126	0	369	1.7	7.8	174	1	0	0	0		
70 to 75	72.5	64.6	29.7	325	236	286	847	170	173	0	504	1.7	7.8	174	0	0	0	0		
65 to 70	67.5	60.9	27.0	251	204	216	671	135	137	0	399	1.7	7.8	174	0	0	0	0		
60 to 65	62.5	56.3	24.0	358	268	301	927	186	189	0	552	1.7	7.8	174	0	0	0	0		
Heating																				
55 to 60	57.5	50.3	20.4	217	191	192	600	121	122	0	357	1.7	9.2	207	3	0			1	0
50 to 55	52.5	46.4	18.3	218	223	289	730	147	149	0	435	1.7	9.2	207	4	1			1	0
45 to 50	47.5	41.8	16.0	243	196	195	634	127	129	0	377	1.7	9.2	207	5	2			1	1
40 to 45	42.5	38.0	14.3	193	171	149	513	103	105	0	305	1.7	9.2	207	7	3			1	2
35 to 40	37.5	33.9	12.5	357	311	355	1,023	206	209	0	609	1.7	9.2	207	8	4			2	4
30 to 35	32.5	29.3	10.6	277	221	236	734	147	150	0	437	1.7	9.2	207	9	5			2	4
25 to 30	27.5	24.3	8.7	159	98	134	391	79	80	0	233	1.7	9.2	207	10	6			1	3
20 to 25	22.5	19.3	6.8	89	48	58	195	39	40	0	116	1.7	9.2	207	11	7			1	1
15 to 20	17.5	14.8	5.3	74	20	31	125	25	25	0	74	1.7	9.2	207	12	8			0	1
10 to 15	12.5	10.0	3.8	35	7	5	47	9	10	0	28	1.7	9.2	207	13	10			0	0
5 to 10	7.5	5.1	2.3	17	9	8	34	7	7	0	20	1.7	9.2	207	14	11			0	0
0 to 5	2.5	0.6	1.0	1	0	0	1	0	0	0	1	1.7	9.2	207	16	12			0	0
-5 to 0	(2.5)	0.0	0.0	0	0	0	0	0	0	0	0	1.7	9.2	207	17	13			0	0
-10 to -5	(7.5)	0.0	0.0	0	0	0	0	0	0	0	0	1.7	9.2	207	18	14			0	0
-15 to -10	(12.5)	0.0	0.0	0	0	0	0	0	0	0	0	1.7	9.2	207	19	15			0	0
-20 to -15	(17.5)	0.0	0.0	0	0	0	0	0	0	0	0	1.7	9.2	207	20	16			0	0
-25 to -20	(22.5)	0.0	0.0	0	0	0	0	0	0	0	0	1.7	9.2	207	21	17			0	0
				2,920	2,920	2,920	8,760	1,760	1,786	0	5,214						0	0	9	17

Cell Ref.	Comment
A-H	TMY-2 Weather Data for Newark, NJ
I - L	Occupied hours as per the RFP data
M	Total Crack area of windows and doors
N	Average wind speed during the cooling and heating seasons
O	= [col M] x [col N] x 5286 ÷ 60 x P51
P	= 1.08 x [col O] x (Q55 - [col B]) ÷ 1000 ÷ P46
Q	= 1.08 x [col O] x (Q56 - [col B]) ÷ 1000 ÷ P46
R	[col P] x ([col I] + [col K]) ÷ 1,000 ÷ P47 x P48
S	[col Q] x ([col J] + [col L]) ÷ 1,000 ÷ P47 x P48
T	[col P] x ([col I] + [col K]) ÷ 1,000 ÷ P46
U	[col Q] x ([col J] + [col L]) ÷ 1,000 ÷ P46

Assumptions:	Value	Unit	CELL	Description
			REF	
Door Crack Area	1.00	SF	**P43**	
Window Crack Area	0.00	SF	**P44**	
Soffit Crack Area	0.70	SF	**P45**	
Existing Boiler Plant Efficiency	76.0%		**P46**	
Existing Cooling Plant Efficiency	2.34	COP	**P47**	
Percent Building Cooled	12.0%		**P48**	
Average Winter Wind Speed	9.2	MPH	**P49**	
Average Summer Wind Speed	7.8	MPH	**P50**	
Crack Area Windward Diversity	15.0%		**P51**	

Average Space Temperatures - After implementation of EMS					
	Cooling		Heating		Description
Occupied	74.0	**O55**	72.0	**Q55**	average temperature for all areas
UnOccupied	85.0	**O56**	55.0	**Q56**	

Page content is subject to Confidentiality Restrictions

Project Template
Theunis Dey-Elementary School
Building Envelope Improvements

TMY-2 Weather Data for Newark, NJ								Operating Hours				Savings								
Amb. Temp Bin deg. F	Ave Temp deg. F	M.C.W.B deg. F	M.C. Enthalpy Btu/lbma	01-08 Hours	09-16 Hours	17-24 Hours	Total Bin Hours	Occ On-Peak Hrs.	UnOcc On-Peak Hrs.	Occ Off-Peak Hrs.	UnOcc Off-Peak Hrs.	Total Crack Area (ft^2)	Average Wind Speed (MPH)	Infiltration Flow Rate (CFM)	Occ. Heating / Cooling Savings (MBH)	UnOcc. Heating / Cooling Savings (MBH)	Occ. Cooling Savings (MMBTU)	UnOcc. Cooling Savings (MMBTU)	Occ. Heating Savings (MMBTU)	UnOcc. Heating Savings (MMBTU)
A	**B**	**C**	**D**	**E**	**F**	**G**	**H**	**I**	**J**	**K**	**L**	**M**	**N**	**O**	**P**	**Q**	**R**	**S**	**T**	**U**
Cooling																				
105 to 110	107.5	0.0	0.0	0	0	0	0	0	0	0	0	13.5	7.8	553	19	13	0	0		
100 to 105	102.5	0.0	0.0	0	0	0	0	0	0	0	0	13.5	7.8	553	16	10	0	0		
95 to 100	97.5	72.2	35.7	0	5	1	6	1	1	0	4	13.5	7.8	553	13	7	0	0		
90 to 95	92.5	73.8	37.3	0	33	7	40	8	8	0	24	13.5	7.8	553	10	4	0	0		
85 to 90	87.5	71.3	35.1	0	92	30	122	25	25	0	73	13.5	7.8	553	7	1	0	0		
80 to 85	82.5	69.2	33.2	8	330	162	500	100	102	0	298	13.5	7.8	553	4	0	0	0		
75 to 80	77.5	67.4	31.8	98	257	265	620	125	126	0	369	13.5	7.8	553	1	0	0	0		
70 to 75	72.5	64.6	29.7	325	236	286	847	170	173	0	504	13.5	7.8	553	0	0	0	0		
65 to 70	67.5	60.9	27.0	251	204	216	671	135	137	0	399	13.5	7.8	553	0	0	0	0		
60 to 65	62.5	56.3	24.0	358	268	301	927	186	189	0	552	13.5	7.8	553	0	0	0	0		
Heating																				
55 to 60	57.5	50.3	20.4	217	191	192	600	121	122	0	357	13.5	9.2	658	9	0			1	0
50 to 55	52.5	46.4	18.3	218	223	289	730	147	149	0	435	13.5	9.2	658	12	2			2	1
45 to 50	47.5	41.8	16.0	243	196	195	634	127	129	0	377	13.5	9.2	658	16	5			3	3
40 to 45	42.5	38.0	14.3	193	171	149	513	103	105	0	305	13.5	9.2	658	20	9			3	5
35 to 40	37.5	33.9	12.5	357	311	355	1,023	206	209	0	609	13.5	9.2	658	23	12			6	13
30 to 35	32.5	29.3	10.6	277	221	236	734	147	150	0	437	13.5	9.2	658	27	16			5	12
25 to 30	27.5	24.3	8.7	159	98	134	391	79	80	0	233	13.5	9.2	658	30	20			3	8
20 to 25	22.5	19.3	6.8	89	48	58	195	39	40	0	116	13.5	9.2	658	34	23			2	5
15 to 20	17.5	14.8	5.3	74	20	31	125	25	25	0	74	13.5	9.2	658	37	27			1	3
10 to 15	12.5	10.0	3.8	35	7	5	47	9	10	0	28	13.5	9.2	658	41	30			0	1
5 to 10	7.5	5.1	2.3	17	9	8	34	7	7	0	20	13.5	9.2	658	44	34			0	1
0 to 5	2.5	0.6	1.0	1	0	0	1	0	0	0	1	13.5	9.2	658	48	37			0	0
-5 to 0	(2.5)	0.0	0.0	0	0	0	0	0	0	0	0	13.5	9.2	658	52	41			0	0
-10 to -5	(7.5)	0.0	0.0	0	0	0	0	0	0	0	0	13.5	9.2	658	55	44			0	0
-15 to -10	(12.5)	0.0	0.0	0	0	0	0	0	0	0	0	13.5	9.2	658	59	48			0	0
-20 to -15	(17.5)	0.0	0.0	0	0	0	0	0	0	0	0	13.5	9.2	658	62	52			0	0
-25 to -20	(22.5)	0.0	0.0	0	0	0	0	0	0	0	0	13.5	9.2	658	66	55			0	0
				2,920	2,920	2,920	8,760	1,760	1,786	0	5,214						0	0	27	53

Cell Ref.	Comment
A-H	TMY-2 Weather Data for Newark, NJ
I - L	Occupied hours as per the RFP data
M	Total Crack area of windows and doors
N	Average wind speed during the cooling and heating seasons
O	= [col M] x [col N] x 5286 ÷ 60 x P51
P	= 1.08 x [col O] x (Q55 - [col B]) ÷ 1000 ÷ P46
Q	= 1.08 x [col O] x (Q56 - [col B]) ÷ 1000 ÷ P46
R	[col P] x ([col I] + [col K]) ÷ 1,000 ÷ P47 x P48
S	[col Q] x ([col J] + [col L]) ÷ 1,000 ÷ P47 x P48
T	[col P] x ([col I] + [col K]) ÷ 1,000 ÷ P46
U	[col Q] x ([col J] + [col L]) ÷ 1,000 ÷ P46

Assumptions:	Value	Unit	CELL	Description
			REF	
Door Crack Area	8.00	SF	**P43**	
Window Crack Area	1.80	SF	**P44**	
Soffit Crack Area	3.70	SF	**P45**	
Existing Boiler Plant Efficiency	78.0%		**P46**	
Existing Cooling Plant Efficiency	3.52	COP	**P47**	
Percent Building Cooled	31.0%		**P48**	
Average Winter Wind Speed	9.2	MPH	**P49**	
Average Summer Wind Speed	7.8	MPH	**P50**	
Crack Area Windward Diversity	6.0%		**P51**	

Average Space Temperatures - After implementation of EMS					
	Cooling		Heating		Description
Occupied	76.0	**O55**	70.0	**Q55**	average temperature for all areas
UnOccupied	85.0	**O56**	55.0	**Q56**	

Page content is subject to Confidentiality Restrictions

Project Template
James Fallon-Elementary School
Building Envelope Improvements

TMY-2 Weather Data for Newark, NJ								Operating Hours				Savings								
Amb. Temp Bin deg. F	Ave Temp deg. F	M.C.W.B deg. F	M.C. Enthalpy Btu/lbma	01-08 Hours	09-16 Hours	17-24 Hours	Total Bin Hours	Occ On-Peak Hrs.	UnOcc On-Peak Hrs.	Occ Off-Peak Hrs.	UnOcc Off-Peak Hrs.	Total Crack Area (ft^2)	Average Wind Speed (MPH)	Infiltration Flow Rate (CFM)	Occ. Heating / Cooling Savings (MBH)	UnOcc. Heating / Cooling Savings (MBH)	Occ. Cooling Savings (MMBTU)	UnOcc. Cooling Savings (MMBTU)	Occ. Heating Savings (MMBTU)	UnOcc. Heating Savings (MMBTU)
A	**B**	**C**	**D**	**E**	**F**	**G**	**H**	**I**	**J**	**K**	**L**	**M**	**N**	**O**	**P**	**Q**	**R**	**S**	**T**	**U**
Cooling																				
105 to 110	107.5	0.0	0.0	0	0	0	0	0	0	0	0	3.7	7.8	379	14	9	0	0		
100 to 105	102.5	0.0	0.0	0	0	0	0	0	0	0	0	3.7	7.8	379	12	7	0	0		
95 to 100	97.5	72.2	35.7	0	5	1	6	1	1	0	4	3.7	7.8	379	10	5	0	0		
90 to 95	92.5	73.8	37.3	0	33	7	40	8	8	0	24	3.7	7.8	379	8	3	0	0		
85 to 90	87.5	71.3	35.1	0	92	30	122	25	25	0	73	3.7	7.8	379	6	1	0	0		
80 to 85	82.5	69.2	33.2	8	330	162	500	100	102	0	298	3.7	7.8	379	3	0	0	0		
75 to 80	77.5	67.4	31.8	98	257	265	620	125	126	0	369	3.7	7.8	379	1	0	0	0		
70 to 75	72.5	64.6	29.7	325	236	286	847	170	173	0	504	3.7	7.8	379	0	0	0	0		
65 to 70	67.5	60.9	27.0	251	204	216	671	135	137	0	399	3.7	7.8	379	0	0	0	0		
60 to 65	62.5	56.3	24.0	358	268	301	927	186	189	0	552	3.7	7.8	379	0	0	0	0		
Heating																				
55 to 60	57.5	50.3	20.4	217	191	192	600	121	122	0	357	3.7	9.2	451	7	0			1	0
50 to 55	52.5	46.4	18.3	218	223	289	730	147	149	0	435	3.7	9.2	451	9	1			2	1
45 to 50	47.5	41.8	16.0	243	196	195	634	127	129	0	377	3.7	9.2	451	12	4			2	2
40 to 45	42.5	38.0	14.3	193	171	149	513	103	105	0	305	3.7	9.2	451	14	6			2	3
35 to 40	37.5	33.9	12.5	357	311	355	1,023	206	209	0	609	3.7	9.2	451	17	9			4	8
30 to 35	32.5	29.3	10.6	277	221	236	734	147	150	0	437	3.7	9.2	451	19	11			3	8
25 to 30	27.5	24.3	8.7	159	98	134	391	79	80	0	233	3.7	9.2	451	22	13			2	5
20 to 25	22.5	19.3	6.8	89	48	58	195	39	40	0	116	3.7	9.2	451	24	16			1	3
15 to 20	17.5	14.8	5.3	74	20	31	125	25	25	0	74	3.7	9.2	451	27	18			1	2
10 to 15	12.5	10.0	3.8	35	7	5	47	9	10	0	28	3.7	9.2	451	29	21			0	1
5 to 10	7.5	5.1	2.3	17	9	8	34	7	7	0	20	3.7	9.2	451	31	23			0	1
0 to 5	2.5	0.6	1.0	1	0	0	1	0	0	0	1	3.7	9.2	451	34	26			0	0
-5 to 0	(2.5)	0.0	0.0	0	0	0	0	0	0	0	0	3.7	9.2	451	36	28			0	0
-10 to -5	(7.5)	0.0	0.0	0	0	0	0	0	0	0	0	3.7	9.2	451	39	30			0	0
-15 to -10	(12.5)	0.0	0.0	0	0	0	0	0	0	0	0	3.7	9.2	451	41	33			0	0
-20 to -15	(17.5)	0.0	0.0	0	0	0	0	0	0	0	0	3.7	9.2	451	44	35			0	0
-25 to -20	(22.5)	0.0	0.0	0	0	0	0	0	0	0	0	3.7	9.2	451	46	38			0	0
				2,920	2,920	2,920	8,760	1,760	1,786	0	5,214						0	0	18	33

Cell Ref.	Comment
A-H	TMY-2 Weather Data for Newark, NJ
I - L	Occupied hours as per the RFP data
M	Total Crack area of windows and doors
N	Average wind speed during the cooling and heating seasons
O	= [col M] x [col N] x 5286 ÷ 60 x P51
P	= 1.08 x [col O] x (Q55 - [col B]) ÷ 1000 ÷ P46
Q	= 1.08 x [col O] x (Q56 - [col B]) ÷ 1000 ÷ P46
R	[col P] x ([col I] + [col K]) ÷ 1,000 ÷ P47 x P48
S	[col Q] x ([col J] + [col L]) ÷ 1,000 ÷ P47 x P48
T	[col P] x ([col I] + [col K]) ÷ 1,000 ÷ P46
U	[col Q] x ([col J] + [col L]) ÷ 1,000 ÷ P46

Assumptions:	Value	Unit	CELL	Description
			REF	
Door Crack Area	1.40	SF	**P43**	
Window Crack Area	2.30	SF	**P44**	
Soffit Crack Area	0.00	SF	**P45**	
Existing Boiler Plant Efficiency	85.0%		**P46**	
Existing Cooling Plant Efficiency	2.64	COP	**P47**	
Percent Building Cooled	75.0%		**P48**	
Average Winter Wind Speed	9.2	MPH	**P49**	
Average Summer Wind Speed	7.8	MPH	**P50**	
Crack Area Windward Diversity	15.0%		**P51**	

Average Space Temperatures - After implementation of EMS					
	Cooling		Heating		Description
Occupied	74.0	**O55**	72.0	**Q55**	average temperature for all areas
UnOccupied	85.0	**O56**	55.0	**Q56**	

Page content is subject to Confidentiality Restrictions

Project Template
John F. Kennedy-Elementary School
Building Envelope Improvements

TMY-2 Weather Data for Newark, NJ								Operating Hours				Savings								
Amb. Temp Bin deg. F	Ave Temp deg. F	M.C.W.B deg. F	M.C. Enthalpy Btu/lbma	01-08 Hours	09-16 Hours	17-24 Hours	Total Bin Hours	Occ On-Peak Hrs.	UnOcc On-Peak Hrs.	Occ Off-Peak Hrs.	UnOcc Off-Peak Hrs.	Total Crack Area (ft^2)	Average Wind Speed (MPH)	Infiltration Flow Rate (CFM)	Occ. Heating / Cooling Savings (MBH)	UnOcc. Heating / Cooling Savings (MBH)	Occ. Cooling Savings (MMBTU)	UnOcc. Cooling Savings (MMBTU)	Occ. Heating Savings (MMBTU)	UnOcc. Heating Savings (MMBTU)
A	**B**	**C**	**D**	**E**	**F**	**G**	**H**	**I**	**J**	**K**	**L**	**M**	**N**	**O**	**P**	**Q**	**R**	**S**	**T**	**U**
Cooling																				
105 to 110	107.5	0.0	0.0	0	0	0	0	0	0	0	0	7.8	7.8	426	15	10	0	0		
100 to 105	102.5	0.0	0.0	0	0	0	0	0	0	0	0	7.8	7.8	426	13	8	0	0		
95 to 100	97.5	72.2	35.7	0	5	1	6	1	1	0	4	7.8	7.8	426	11	6	0	0		
90 to 95	92.5	73.8	37.3	0	33	7	40	8	8	0	24	7.8	7.8	426	9	3	0	0		
85 to 90	87.5	71.3	35.1	0	92	30	122	25	25	0	73	7.8	7.8	426	6	1	0	0		
80 to 85	82.5	69.2	33.2	8	330	162	500	100	102	0	298	7.8	7.8	426	4	0	0	0		
75 to 80	77.5	67.4	31.8	98	257	265	620	125	126	0	369	7.8	7.8	426	2	0	0	0		
70 to 75	72.5	64.6	29.7	325	236	286	847	170	173	0	504	7.8	7.8	426	0	0	0	0		
65 to 70	67.5	60.9	27.0	251	204	216	671	135	137	0	399	7.8	7.8	426	0	0	0	0		
60 to 65	62.5	56.3	24.0	358	268	301	927	186	189	0	552	7.8	7.8	426	0	0	0	0		
Heating																				
55 to 60	57.5	50.3	20.4	217	191	192	600	121	122	0	357	7.8	9.2	507	8	0			1	0
50 to 55	52.5	46.4	18.3	218	223	289	730	147	149	0	435	7.8	9.2	507	11	1			2	1
45 to 50	47.5	41.8	16.0	243	196	195	634	127	129	0	377	7.8	9.2	507	14	4			2	3
40 to 45	42.5	38.0	14.3	193	171	149	513	103	105	0	305	7.8	9.2	507	17	7			2	4
35 to 40	37.5	33.9	12.5	357	311	355	1,023	206	209	0	609	7.8	9.2	507	19	10			5	10
30 to 35	32.5	29.3	10.6	277	221	236	734	147	150	0	437	7.8	9.2	507	22	12			4	10
25 to 30	27.5	24.3	8.7	159	98	134	391	79	80	0	233	7.8	9.2	507	25	15			3	6
20 to 25	22.5	19.3	6.8	89	48	58	195	39	40	0	116	7.8	9.2	507	28	18			1	4
15 to 20	17.5	14.8	5.3	74	20	31	125	25	25	0	74	7.8	9.2	507	30	21			1	3
10 to 15	12.5	10.0	3.8	35	7	5	47	9	10	0	28	7.8	9.2	507	33	23			0	1
5 to 10	7.5	5.1	2.3	17	9	8	34	7	7	0	20	7.8	9.2	507	36	26			0	1
0 to 5	2.5	0.6	1.0	1	0	0	1	0	0	0	1	7.8	9.2	507	39	29			0	0
-5 to 0	(2.5)	0.0	0.0	0	0	0	0	0	0	0	0	7.8	9.2	507	41	31			0	0
-10 to -5	(7.5)	0.0	0.0	0	0	0	0	0	0	0	0	7.8	9.2	507	44	34			0	0
-15 to -10	(12.5)	0.0	0.0	0	0	0	0	0	0	0	0	7.8	9.2	507	47	37			0	0
-20 to -15	(17.5)	0.0	0.0	0	0	0	0	0	0	0	0	7.8	9.2	507	50	40			0	0
-25 to -20	(22.5)	0.0	0.0	0	0	0	0	0	0	0	0	7.8	9.2	507	52	42			0	0
				2,920	2,920	2,920	8,760	1,760	1,786	0	5,214						0	0	23	42

Cell Ref.	Comment
A-H	TMY-2 Weather Data for Newark, NJ
I - L	Occupied hours as per the RFP data
M	Total Crack area of windows and doors
N	Average wind speed during the cooling and heating seasons
O	= [col M] x [col N] x 5286 ÷ 60 x P51
P	= 1.08 x [col O] x (Q55 - [col B]) ÷ 1000 ÷ P46
Q	= 1.08 x [col O] x (Q56 - [col B]) ÷ 1000 ÷ P46
R	[col P] x ([col I] + [col K]) ÷ 1,000 ÷ P47 x P48
S	[col Q] x ([col J] + [col L]) ÷ 1,000 ÷ P47 x P48
T	[col P] x ([col I] + [col K]) ÷ 1,000 ÷ P46
U	[col Q] x ([col J] + [col L]) ÷ 1,000 ÷ P46

Assumptions:	Value	Unit	CELL	Description
			REF	
Door Crack Area	0.70	SF	**P43**	
Window Crack Area	3.50	SF	**P44**	
Soffit Crack Area	3.60	SF	**P45**	
Existing Boiler Plant Efficiency	76.0%		**P46**	
Existing Cooling Plant Efficiency	3.08	COP	**P47**	
Percent Building Cooled	33.0%		**P48**	
Average Winter Wind Speed	9.2	MPH	**P49**	
Average Summer Wind Speed	7.8	MPH	**P50**	
Crack Area Windward Diversity	8.0%		**P51**	

Average Space Temperatures - After implementation of EMS					
	Cooling		Heating		Description
Occupied	74.0	**O55**	73.0	**Q55**	average temperature for all areas
UnOccupied	85.0	**O56**	55.0	**Q56**	

Page content is subject to Confidentiality Restrictions

Project Template
Lafayette-Elementary School
Building Envelope Improvements

TMY-2 Weather Data for Newark, NJ								Operating Hours				Savings								
Amb. Temp Bin deg. F	Ave Temp deg. F	M.C.W.B deg. F	M.C. Enthalpy Btu/lbma	01-08 Hours	09-16 Hours	17-24 Hours	Total Bin Hours	Occ On-Peak Hrs.	UnOcc On-Peak Hrs.	Occ Off-Peak Hrs.	UnOcc Off-Peak Hrs.	Total Crack Area (ft^2)	Average Wind Speed (MPH)	Infiltration Flow Rate (CFM)	Occ. Heating / Cooling Savings (MBH)	UnOcc. Heating / Cooling Savings (MBH)	Occ. Cooling Savings (MMBTU)	UnOcc. Cooling Savings (MMBTU)	Occ. Heating Savings (MMBTU)	UnOcc. Heating Savings (MMBTU)
A	**B**	**C**	**D**	**E**	**F**	**G**	**H**	**I**	**J**	**K**	**L**	**M**	**N**	**O**	**P**	**Q**	**R**	**S**	**T**	**U**
Cooling																				
105 to 110	107.5	0.0	0.0	0	0	0	0	0	0	0	0	7.8	7.8	639	23	16	0	0		
100 to 105	102.5	0.0	0.0	0	0	0	0	0	0	0	0	7.8	7.8	639	20	12	0	0		
95 to 100	97.5	72.2	35.7	0	5	1	6	1	1	0	4	7.8	7.8	639	16	9	0	0		
90 to 95	92.5	73.8	37.3	0	33	7	40	9	7	0	24	7.8	7.8	639	13	5	0	0		
85 to 90	87.5	71.3	35.1	0	92	30	122	27	22	0	73	7.8	7.8	639	9	2	0	0		
80 to 85	82.5	69.2	33.2	8	330	162	500	112	91	0	298	7.8	7.8	639	6	0	0	0		
75 to 80	77.5	67.4	31.8	98	257	265	620	138	113	0	369	7.8	7.8	639	2	0	0	0		
70 to 75	72.5	64.6	29.7	325	236	286	847	189	154	0	504	7.8	7.8	639	0	0	0	0		
65 to 70	67.5	60.9	27.0	251	204	216	671	150	122	0	399	7.8	7.8	639	0	0	0	0		
60 to 65	62.5	56.3	24.0	358	268	301	927	207	168	0	552	7.8	7.8	639	0	0	0	0		
Heating																				
55 to 60	57.5	50.3	20.4	217	191	192	600	134	109	0	357	7.8	9.2	761	12	0			2	0
50 to 55	52.5	46.4	18.3	218	223	289	730	163	133	0	435	7.8	9.2	761	16	2			3	2
45 to 50	47.5	41.8	16.0	243	196	195	634	142	115	0	377	7.8	9.2	761	20	6			4	4
40 to 45	42.5	38.0	14.3	193	171	149	513	115	93	0	305	7.8	9.2	761	24	10			4	5
35 to 40	37.5	33.9	12.5	357	311	355	1,023	228	186	0	609	7.8	9.2	761	28	14			9	15
30 to 35	32.5	29.3	10.6	277	221	236	734	164	133	0	437	7.8	9.2	761	32	18			7	14
25 to 30	27.5	24.3	8.7	159	98	134	391	87	71	0	233	7.8	9.2	761	37	23			4	9
20 to 25	22.5	19.3	6.8	89	48	58	195	44	35	0	116	7.8	9.2	761	41	27			2	5
15 to 20	17.5	14.8	5.3	74	20	31	125	28	23	0	74	7.8	9.2	761	45	31			2	4
10 to 15	12.5	10.0	3.8	35	7	5	47	10	9	0	28	7.8	9.2	761	49	35			1	2
5 to 10	7.5	5.1	2.3	17	9	8	34	8	6	0	20	7.8	9.2	761	53	39			1	1
0 to 5	2.5	0.6	1.0	1	0	0	1	0	0	0	1	7.8	9.2	761	57	43			0	0
-5 to 0	(2.5)	0.0	0.0	0	0	0	0	0	0	0	0	7.8	9.2	761	61	47			0	0
-10 to -5	(7.5)	0.0	0.0	0	0	0	0	0	0	0	0	7.8	9.2	761	65	51			0	0
-15 to -10	(12.5)	0.0	0.0	0	0	0	0	0	0	0	0	7.8	9.2	761	69	55			0	0
-20 to -15	(17.5)	0.0	0.0	0	0	0	0	0	0	0	0	7.8	9.2	761	74	60			0	0
-25 to -20	(22.5)	0.0	0.0	0	0	0	0	0	0	0	0	7.8	9.2	761	78	64			0	0
				2,920	2,920	2,920	8,760	1,955	1,591	0	5,214						0	0	38	61

Cell Ref.	Comment
A-H	TMY-2 Weather Data for Newark, NJ
I - L	Occupied hours as per the RFP data
M	Total Crack area of windows and doors
N	Average wind speed during the cooling and heating seasons
O	= [col M] x [col N] x 5286 ÷ 60 x P51
P	= 1.08 x [col O] x (Q55 - [col B]) ÷ 1000 ÷ P46
Q	= 1.08 x [col O] x (Q56 - [col B]) ÷ 1000 ÷ P46
R	[col P] x ([col I] + [col K]) ÷ 1,000 ÷ P47 x P48
S	[col Q] x ([col J] + [col L]) ÷ 1,000 ÷ P47 x P48
T	[col P] x ([col I] + [col K]) ÷ 1,000 ÷ P46
U	[col Q] x ([col J] + [col L]) ÷ 1,000 ÷ P46

Assumptions:	Value	Unit	CELL	Description
			REF	
Door Crack Area	0.80	SF	**P43**	
Window Crack Area	0.30	SF	**P44**	
Soffit Crack Area	6.70	SF	**P45**	
Existing Boiler Plant Efficiency	76.0%		**P46**	
Existing Cooling Plant Efficiency	2.64	COP	**P47**	
Percent Building Cooled	62.0%		**P48**	
Average Winter Wind Speed	9.2	MPH	**P49**	
Average Summer Wind Speed	7.8	MPH	**P50**	
Crack Area Windward Diversity	12.0%		**P51**	

Average Space Temperatures - After implementation of EMS					
	Cooling		Heating		Description
Occupied	74.0	**O55**	72.0	**Q55**	average temperature for all areas
UnOccupied	85.0	**O56**	55.0	**Q56**	

Page content is subject to Confidentiality Restrictions

Project Template
Packanack-Elementary School
Building Envelope Improvements

TMY-2 Weather Data for Newark, NJ								Operating Hours				Savings								
Amb. Temp Bin deg. F	Ave Temp deg. F	M.C.W.B deg. F	M.C. Enthalpy Btu/lbma	01-08 Hours	09-16 Hours	17-24 Hours	Total Bin Hours	Occ On-Peak Hrs.	UnOcc On-Peak Hrs.	Occ Off-Peak Hrs.	UnOcc Off-Peak Hrs.	Total Crack Area (ft^2)	Average Wind Speed (MPH)	Infiltration Flow Rate (CFM)	Occ. Heating / Cooling Savings (MBH)	UnOcc. Heating / Cooling Savings (MBH)	Occ. Cooling Savings (MMBTU)	UnOcc. Cooling Savings (MMBTU)	Occ. Heating Savings (MMBTU)	UnOcc. Heating Savings (MMBTU)
A	**B**	**C**	**D**	**E**	**F**	**G**	**H**	**I**	**J**	**K**	**L**	**M**	**N**	**O**	**P**	**Q**	**R**	**S**	**T**	**U**
Cooling																				
105 to 110	107.5	0.0	0.0	0	0	0	0	0	0	0	0	12.1	7.8	1,652	60	40	0	0		
100 to 105	102.5	0.0	0.0	0	0	0	0	0	0	0	0	12.1	7.8	1,652	51	31	0	0		
95 to 100	97.5	72.2	35.7	0	5	1	6	1	1	0	4	12.1	7.8	1,652	42	22	0	0		
90 to 95	92.5	73.8	37.3	0	33	7	40	8	8	0	24	12.1	7.8	1,652	33	13	0	0		
85 to 90	87.5	71.3	35.1	0	92	30	122	25	25	0	73	12.1	7.8	1,652	24	4	0	0		
80 to 85	82.5	69.2	33.2	8	330	162	500	100	102	0	298	12.1	7.8	1,652	15	0	0	0		
75 to 80	77.5	67.4	31.8	98	257	265	620	125	126	0	369	12.1	7.8	1,652	6	0	0	0		
70 to 75	72.5	64.6	29.7	325	236	286	847	170	173	0	504	12.1	7.8	1,652	0	0	0	0		
65 to 70	67.5	60.9	27.0	251	204	216	671	135	137	0	399	12.1	7.8	1,652	0	0	0	0		
60 to 65	62.5	56.3	24.0	358	268	301	927	186	189	0	552	12.1	7.8	1,652	0	0	0	0		
Heating																				
55 to 60	57.5	50.3	20.4	217	191	192	600	121	122	0	357	12.1	9.2	1,967	31	0			5	0
50 to 55	52.5	46.4	18.3	218	223	289	730	147	149	0	435	12.1	9.2	1,967	41	5			8	4
45 to 50	47.5	41.8	16.0	243	196	195	634	127	129	0	377	12.1	9.2	1,967	52	16			9	11
40 to 45	42.5	38.0	14.3	193	171	149	513	103	105	0	305	12.1	9.2	1,967	63	27			8	14
35 to 40	37.5	33.9	12.5	357	311	355	1,023	206	209	0	609	12.1	9.2	1,967	73	37			20	40
30 to 35	32.5	29.3	10.6	277	221	236	734	147	150	0	437	12.1	9.2	1,967	84	48			16	37
25 to 30	27.5	24.3	8.7	159	98	134	391	79	80	0	233	12.1	9.2	1,967	95	58			10	24
20 to 25	22.5	19.3	6.8	89	48	58	195	39	40	0	116	12.1	9.2	1,967	105	69			5	14
15 to 20	17.5	14.8	5.3	74	20	31	125	25	25	0	74	12.1	9.2	1,967	116	80			4	10
10 to 15	12.5	10.0	3.8	35	7	5	47	9	10	0	28	12.1	9.2	1,967	126	90			2	4
5 to 10	7.5	5.1	2.3	17	9	8	34	7	7	0	20	12.1	9.2	1,967	137	101			1	4
0 to 5	2.5	0.6	1.0	1	0	0	1	0	0	0	1	12.1	9.2	1,967	148	112			0	0
-5 to 0	(2.5)	0.0	0.0	0	0	0	0	0	0	0	0	12.1	9.2	1,967	158	122			0	0
-10 to -5	(7.5)	0.0	0.0	0	0	0	0	0	0	0	0	12.1	9.2	1,967	169	133			0	0
-15 to -10	(12.5)	0.0	0.0	0	0	0	0	0	0	0	0	12.1	9.2	1,967	179	143			0	0
-20 to -15	(17.5)	0.0	0.0	0	0	0	0	0	0	0	0	12.1	9.2	1,967	190	154			0	0
-25 to -20	(22.5)	0.0	0.0	0	0	0	0	0	0	0	0	12.1	9.2	1,967	201	165			0	0
				2,920	2,920	2,920	8,760	1,760	1,786	0	5,214						0	0	88	163

Cell Ref.	Comment
A-H	TMY-2 Weather Data for Newark, NJ
I - L	Occupied hours as per the RFP data
M	Total Crack area of windows and doors
N	Average wind speed during the cooling and heating seasons
O	= [col M] x [col N] x 5286 ÷ 60 x P51
P	= 1.08 x [col O] x (Q55 - [col B]) ÷ 1000 ÷ P46
Q	= 1.08 x [col O] x (Q56 - [col B]) ÷ 1000 ÷ P46
R	[col P] x ([col I] + [col K]) ÷ 1,000 ÷ P47 x P48
S	[col Q] x ([col J] + [col L]) ÷ 1,000 ÷ P47 x P48
T	[col P] x ([col I] + [col K]) ÷ 1,000 ÷ P46
U	[col Q] x ([col J] + [col L]) ÷ 1,000 ÷ P46

Assumptions:	Value	Unit	CELL	Description
			REF	
Door Crack Area	0.80	SF	**P43**	
Window Crack Area	2.20	SF	**P44**	
Soffit Crack Area	9.10	SF	**P45**	
Existing Boiler Plant Efficiency	76.0%		**P46**	
Existing Cooling Plant Efficiency	3.22	COP	**P47**	
Percent Building Cooled	5.0%		**P48**	
Average Winter Wind Speed	9.2	MPH	**P49**	
Average Summer Wind Speed	7.8	MPH	**P50**	
Crack Area Windward Diversity	20.0%		**P51**	

Average Space Temperatures - After implementation of EMS					
	Cooling		Heating		Description
Occupied	74.0	**O55**	72.0	**Q55**	average temperature for all areas
UnOccupied	85.0	**O56**	55.0	**Q56**	

Page content is subject to Confidentiality Restrictions

Project Template
Pines Lake-Elementary School
Building Envelope Improvements

TMY-2 Weather Data for Newark, NJ								Operating Hours				Savings								
Amb. Temp Bin deg. F	Ave Temp deg. F	M.C.W.B deg. F	M.C. Enthalpy Btu/lbma	01-08 Hours	09-16 Hours	17-24 Hours	Total Bin Hours	Occ On-Peak Hrs.	UnOcc On-Peak Hrs.	Occ Off-Peak Hrs.	UnOcc Off-Peak Hrs.	Total Crack Area (ft^2)	Average Wind Speed (MPH)	Infiltration Flow Rate (CFM)	Occ. Heating / Cooling Savings (MBH)	UnOcc. Heating / Cooling Savings (MBH)	Occ. Cooling Savings (MMBTU)	UnOcc. Cooling Savings (MMBTU)	Occ. Heating Savings (MMBTU)	UnOcc. Heating Savings (MMBTU)
A	**B**	**C**	**D**	**E**	**F**	**G**	**H**	**I**	**J**	**K**	**L**	**M**	**N**	**O**	**P**	**Q**	**R**	**S**	**T**	**U**
Cooling																				
105 to 110	107.5	0.0	0.0	0	0	0	0	0	0	0	0	18.0	7.8	2,458	89	60	0	0		
100 to 105	102.5	0.0	0.0	0	0	0	0	0	0	0	0	18.0	7.8	2,458	76	46	0	0		
95 to 100	97.5	72.2	35.7	0	5	1	6	1	1	0	4	18.0	7.8	2,458	62	33	0	0		
90 to 95	92.5	73.8	37.3	0	33	7	40	8	8	0	24	18.0	7.8	2,458	49	20	0	0		
85 to 90	87.5	71.3	35.1	0	92	30	122	25	25	0	73	18.0	7.8	2,458	36	7	0	0		
80 to 85	82.5	69.2	33.2	8	330	162	500	100	102	0	298	18.0	7.8	2,458	23	0	1	0		
75 to 80	77.5	67.4	31.8	98	257	265	620	125	126	0	369	18.0	7.8	2,458	9	0	0	0		
70 to 75	72.5	64.6	29.7	325	236	286	847	170	173	0	504	18.0	7.8	2,458	0	0	0	0		
65 to 70	67.5	60.9	27.0	251	204	216	671	135	137	0	399	18.0	7.8	2,458	0	0	0	0		
60 to 65	62.5	56.3	24.0	358	268	301	927	186	189	0	552	18.0	7.8	2,458	0	0	0	0		
Heating																				
55 to 60	57.5	50.3	20.4	217	191	192	600	121	122	0	357	18.0	9.2	2,926	46	0			7	0
50 to 55	52.5	46.4	18.3	218	223	289	730	147	149	0	435	18.0	9.2	2,926	62	8			12	6
45 to 50	47.5	41.8	16.0	243	196	195	634	127	129	0	377	18.0	9.2	2,926	77	24			13	16
40 to 45	42.5	38.0	14.3	193	171	149	513	103	105	0	305	18.0	9.2	2,926	93	39			13	21
35 to 40	37.5	33.9	12.5	357	311	355	1,023	206	209	0	609	18.0	9.2	2,926	109	55			29	59
30 to 35	32.5	29.3	10.6	277	221	236	734	147	150	0	437	18.0	9.2	2,926	125	71			24	55
25 to 30	27.5	24.3	8.7	159	98	134	391	79	80	0	233	18.0	9.2	2,926	141	87			15	36
20 to 25	22.5	19.3	6.8	89	48	58	195	39	40	0	116	18.0	9.2	2,926	156	103			8	21
15 to 20	17.5	14.8	5.3	74	20	31	125	25	25	0	74	18.0	9.2	2,926	172	118			6	16
10 to 15	12.5	10.0	3.8	35	7	5	47	9	10	0	28	18.0	9.2	2,926	188	134			2	7
5 to 10	7.5	5.1	2.3	17	9	8	34	7	7	0	20	18.0	9.2	2,926	204	150			2	5
0 to 5	2.5	0.6	1.0	1	0	0	1	0	0	0	1	18.0	9.2	2,926	220	166			0	0
-5 to 0	(2.5)	0.0	0.0	0	0	0	0	0	0	0	0	18.0	9.2	2,926	235	182			0	0
-10 to -5	(7.5)	0.0	0.0	0	0	0	0	0	0	0	0	18.0	9.2	2,926	251	197			0	0
-15 to -10	(12.5)	0.0	0.0	0	0	0	0	0	0	0	0	18.0	9.2	2,926	267	213			0	0
-20 to -15	(17.5)	0.0	0.0	0	0	0	0	0	0	0	0	18.0	9.2	2,926	283	229			0	0
-25 to -20	(22.5)	0.0	0.0	0	0	0	0	0	0	0	0	18.0	9.2	2,926	299	245			0	0
				2,920	2,920	2,920	8,760	1,760	1,786	0	5,214						1	0	131	242

Cell Ref.	Comment
A-H	TMY-2 Weather Data for Newark, NJ
I - L	Occupied hours as per the RFP data
M	Total Crack area of windows and doors
N	Average wind speed during the cooling and heating seasons
O	= [col M] x [col N] x 5286 ÷ 60 x P51
P	= 1.08 x [col O] x (Q55 - [col B]) ÷ 1000 ÷ P46
Q	= 1.08 x [col O] x (Q56 - [col B]) ÷ 1000 ÷ P46
R	[col P] x ([col I] + [col K]) ÷ 1,000 ÷ P47 x P48
S	[col Q] x ([col J] + [col L]) ÷ 1,000 ÷ P47 x P48
T	[col P] x ([col I] + [col K]) ÷ 1,000 ÷ P46
U	[col Q] x ([col J] + [col L]) ÷ 1,000 ÷ P46

Assumptions:	Value	Unit	CELL	Description
			REF	
Door Crack Area	2.80	SF	**P43**	
Window Crack Area	0.00	SF	**P44**	
Soffit Crack Area	15.20	SF	**P45**	
Existing Boiler Plant Efficiency	76.0%		**P46**	
Existing Cooling Plant Efficiency	2.64	COP	**P47**	
Percent Building Cooled	60.0%		**P48**	
Average Winter Wind Speed	9.2	MPH	**P49**	
Average Summer Wind Speed	7.8	MPH	**P50**	
Crack Area Windward Diversity	20.0%		**P51**	

Average Space Temperatures - After implementation of EMS					
	Cooling		Heating		Description
Occupied	74.0	**O55**	72.0	**Q55**	average temperature for all areas
UnOccupied	85.0	**O56**	55.0	**Q56**	

Page content is subject to Confidentiality Restrictions

Project Template
Ryerson-Elementary School
Building Envelope Improvements

TMY-2 Weather Data for Newark, NJ								Operating Hours				Savings								
Amb. Temp Bin deg. F	Ave Temp deg. F	M.C.W.B deg. F	M.C. Enthalpy Btu/lbma	01-08 Hours	09-16 Hours	17-24 Hours	Total Bin Hours	Occ On-Peak Hrs.	UnOcc On-Peak Hrs.	Occ Off-Peak Hrs.	UnOcc Off-Peak Hrs.	Total Crack Area (ft^2)	Average Wind Speed (MPH)	Infiltration Flow Rate (CFM)	Occ. Heating / Cooling Savings (MBH)	UnOcc. Heating / Cooling Savings (MBH)	Occ. Cooling Savings (MMBTU)	UnOcc. Cooling Savings (MMBTU)	Occ. Heating Savings (MMBTU)	UnOcc. Heating Savings (MMBTU)
A	**B**	**C**	**D**	**E**	**F**	**G**	**H**	**I**	**J**	**K**	**L**	**M**	**N**	**O**	**P**	**Q**	**R**	**S**	**T**	**U**
Cooling																				
105 to 110	107.5	0.0	0.0	0	0	0	0	0	0	0	0	2.9	7.8	396	14	10	0	0		
100 to 105	102.5	0.0	0.0	0	0	0	0	0	0	0	0	2.9	7.8	396	12	7	0	0		
95 to 100	97.5	72.2	35.7	0	5	1	6	1	1	0	4	2.9	7.8	396	10	5	0	0		
90 to 95	92.5	73.8	37.3	0	33	7	40	9	7	0	24	2.9	7.8	396	8	3	0	0		
85 to 90	87.5	71.3	35.1	0	92	30	122	29	21	0	73	2.9	7.8	396	6	1	0	0		
80 to 85	82.5	69.2	33.2	8	330	162	500	117	85	0	298	2.9	7.8	396	4	0	0	0		
75 to 80	77.5	67.4	31.8	98	257	265	620	145	106	0	369	2.9	7.8	396	1	0	0	0		
70 to 75	72.5	64.6	29.7	325	236	286	847	199	144	0	504	2.9	7.8	396	0	0	0	0		
65 to 70	67.5	60.9	27.0	251	204	216	671	157	114	0	399	2.9	7.8	396	0	0	0	0		
60 to 65	62.5	56.3	24.0	358	268	301	927	217	158	0	552	2.9	7.8	396	0	0	0	0		
Heating																				
55 to 60	57.5	50.3	20.4	217	191	192	600	141	102	0	357	2.9	9.2	471	7	0			1	0
50 to 55	52.5	46.4	18.3	218	223	289	730	171	124	0	435	2.9	9.2	471	10	1			2	1
45 to 50	47.5	41.8	16.0	243	196	195	634	149	108	0	377	2.9	9.2	471	12	4			2	2
40 to 45	42.5	38.0	14.3	193	171	149	513	120	87	0	305	2.9	9.2	471	15	6			2	3
35 to 40	37.5	33.9	12.5	357	311	355	1,023	240	174	0	609	2.9	9.2	471	18	9			6	9
30 to 35	32.5	29.3	10.6	277	221	236	734	172	125	0	437	2.9	9.2	471	20	11			5	8
25 to 30	27.5	24.3	8.7	159	98	134	391	92	67	0	233	2.9	9.2	471	23	14			3	6
20 to 25	22.5	19.3	6.8	89	48	58	195	46	33	0	116	2.9	9.2	471	25	17			2	3
15 to 20	17.5	14.8	5.3	74	20	31	125	29	21	0	74	2.9	9.2	471	28	19			1	2
10 to 15	12.5	10.0	3.8	35	7	5	47	11	8	0	28	2.9	9.2	471	30	22			0	1
5 to 10	7.5	5.1	2.3	17	9	8	34	8	6	0	20	2.9	9.2	471	33	24			0	1
0 to 5	2.5	0.6	1.0	1	0	0	1	0	0	0	1	2.9	9.2	471	35	27			0	0
-5 to 0	(2.5)	0.0	0.0	0	0	0	0	0	0	0	0	2.9	9.2	471	38	29			0	0
-10 to -5	(7.5)	0.0	0.0	0	0	0	0	0	0	0	0	2.9	9.2	471	40	32			0	0
-15 to -10	(12.5)	0.0	0.0	0	0	0	0	0	0	0	0	2.9	9.2	471	43	34			0	0
-20 to -15	(17.5)	0.0	0.0	0	0	0	0	0	0	0	0	2.9	9.2	471	46	37			0	0
-25 to -20	(22.5)	0.0	0.0	0	0	0	0	0	0	0	0	2.9	9.2	471	48	39			0	0
				2,920	2,920	2,920	8,760	2,053	1,493	0	5,214						0	0	25	37

Cell Ref.	Comment
A-H	TMY-2 Weather Data for Newark, NJ
I - L	Occupied hours as per the RFP data
M	Total Crack area of windows and doors
N	Average wind speed during the cooling and heating seasons
O	= [col M] x [col N] x 5286 ÷ 60 x P51
P	= 1.08 x [col O] x (Q55 - [col B]) ÷ 1000 ÷ P46
Q	= 1.08 x [col O] x (Q56 - [col B]) ÷ 1000 ÷ P46
R	[col P] x ([col I] + [col K]) ÷ 1,000 ÷ P47 x P48
S	[col Q] x ([col J] + [col L]) ÷ 1,000 ÷ P47 x P48
T	[col P] x ([col I] + [col K]) ÷ 1,000 ÷ P46
U	[col Q] x ([col J] + [col L]) ÷ 1,000 ÷ P46

Assumptions:	Value	Unit	CELL	Description
			REF	
Door Crack Area	0.80	SF	**P43**	
Window Crack Area	0.00	SF	**P44**	
Soffit Crack Area	2.10	SF	**P45**	
Existing Boiler Plant Efficiency	76.0%		**P46**	
Existing Cooling Plant Efficiency	3.52	COP	**P47**	
Percent Building Cooled	24.0%		**P48**	
Average Winter Wind Speed	9.2	MPH	**P49**	
Average Summer Wind Speed	7.8	MPH	**P50**	
Crack Area Windward Diversity	20.0%		**P51**	

Average Space Temperatures - After implementation of EMS					
	Cooling		Heating		Description
Occupied	74.0	**O55**	72.0	**Q55**	average temperature for all areas
UnOccupied	85.0	**O56**	55.0	**Q56**	

Page content is subject to Confidentiality Restrictions

Project Template
Albert Payson Terhune-Elementary School
Building Envelope Improvements

TMY-2 Weather Data for Newark, NJ								Operating Hours				Savings								
Amb. Temp Bin deg. F	Ave Temp deg. F	M.C.W.B deg. F	M.C. Enthalpy Btu/lbma	01-08 Hours	09-16 Hours	17-24 Hours	Total Bin Hours	Occ On-Peak Hrs.	UnOcc On-Peak Hrs.	Occ Off-Peak Hrs.	UnOcc Off-Peak Hrs.	Total Crack Area (ft^2)	Average Wind Speed (MPH)	Infiltration Flow Rate (CFM)	Occ. Heating / Cooling Savings (MBH)	UnOcc. Heating / Cooling Savings (MBH)	Occ. Cooling Savings (MMBTU)	UnOcc. Cooling Savings (MMBTU)	Occ. Heating Savings (MMBTU)	UnOcc. Heating Savings (MMBTU)
A	B	C	D	E	F	G	H	I	J	K	L	M	N	O	P	Q	R	S	T	U
Cooling																				
105 to 110	107.5	0.0	0.0	0	0	0	0	0	0	0	0	18.9	7.8	645	23	16	0	0		
100 to 105	102.5	0.0	0.0	0	0	0	0	0	0	0	0	18.9	7.8	645	20	12	0	0		
95 to 100	97.5	72.2	35.7	0	5	1	6	1	1	0	4	18.9	7.8	645	16	9	0	0		
90 to 95	92.5	73.8	37.3	0	33	7	40	8	8	0	24	18.9	7.8	645	13	5	0	0		
85 to 90	87.5	71.3	35.1	0	92	30	122	25	25	0	73	18.9	7.8	645	9	2	0	0		
80 to 85	82.5	69.2	33.2	8	330	162	500	100	102	0	298	18.9	7.8	645	6	0	0	0		
75 to 80	77.5	67.4	31.8	98	257	265	620	125	126	0	369	18.9	7.8	645	2	0	0	0		
70 to 75	72.5	64.6	29.7	325	236	286	847	170	173	0	504	18.9	7.8	645	0	0	0	0		
65 to 70	67.5	60.9	27.0	251	204	216	671	135	137	0	399	18.9	7.8	645	0	0	0	0		
60 to 65	62.5	56.3	24.0	358	268	301	927	186	189	0	552	18.9	7.8	645	0	0	0	0		
Heating																				
55 to 60	57.5	50.3	20.4	217	191	192	600	121	122	0	357	18.9	9.2	768	13	0			2	0
50 to 55	52.5	46.4	18.3	218	223	289	730	147	149	0	435	18.9	9.2	768	17	2			3	2
45 to 50	47.5	41.8	16.0	243	196	195	634	127	129	0	377	18.9	9.2	768	21	6			4	4
40 to 45	42.5	38.0	14.3	193	171	149	513	103	105	0	305	18.9	9.2	768	25	10			3	6
35 to 40	37.5	33.9	12.5	357	311	355	1,023	206	209	0	609	18.9	9.2	768	29	15			8	16
30 to 35	32.5	29.3	10.6	277	221	236	734	147	150	0	437	18.9	9.2	768	34	19			7	14
25 to 30	27.5	24.3	8.7	159	98	134	391	79	80	0	233	18.9	9.2	768	38	23			4	9
20 to 25	22.5	19.3	6.8	89	48	58	195	39	40	0	116	18.9	9.2	768	42	27			2	6
15 to 20	17.5	14.8	5.3	74	20	31	125	25	25	0	74	18.9	9.2	768	46	31			2	4
10 to 15	12.5	10.0	3.8	35	7	5	47	9	10	0	28	18.9	9.2	768	50	35			1	2
5 to 10	7.5	5.1	2.3	17	9	8	34	7	7	0	20	18.9	9.2	768	54	39			0	1
0 to 5	2.5	0.6	1.0	1	0	0	1	0	0	0	1	18.9	9.2	768	58	44			0	0
-5 to 0	(2.5)	0.0	0.0	0	0	0	0	0	0	0	0	18.9	9.2	768	63	48			0	0
-10 to -5	(7.5)	0.0	0.0	0	0	0	0	0	0	0	0	18.9	9.2	768	67	52			0	0
-15 to -10	(12.5)	0.0	0.0	0	0	0	0	0	0	0	0	18.9	9.2	768	71	56			0	0
-20 to -15	(17.5)	0.0	0.0	0	0	0	0	0	0	0	0	18.9	9.2	768	75	60			0	0
-25 to -20	(22.5)	0.0	0.0	0	0	0	0	0	0	0	0	18.9	9.2	768	79	64			0	0
				2,920	2,920	2,920	8,760	1,760	1,786	0	5,214						0	0	35	64

Cell Ref.	Comment
A-H	TMY-2 Weather Data for Newark, NJ
I - L	Occupied hours as per the RFP data
M	Total Crack area of windows and doors
N	Average wind speed during the cooling and heating seasons
O	= [col M] x [col N] x 5286 ÷ 60 x P51
P	= 1.08 x [col O] x (Q55 - [col B]) ÷ 1000 ÷ P46
Q	= 1.08 x [col O] x (Q56 - [col B]) ÷ 1000 ÷ P46
R	[col P] x ([col I] + [col K]) ÷ 1,000 ÷ P47 x P48
S	[col Q] x ([col J] + [col L]) ÷ 1,000 ÷ P47 x P48
T	[col P] x ([col I] + [col K]) ÷ 1,000 ÷ P46
U	[col Q] x ([col J] + [col L]) ÷ 1,000 ÷ P46

Assumptions:	Value	Unit	CELL	Description
			REF	
Door Crack Area	8.20	SF	P43	
Window Crack Area	1.70	SF	P44	
Soffit Crack Area	9.00	SF	P45	
Existing Boiler Plant Efficiency	76.0%		P46	
Existing Cooling Plant Efficiency	3.37	COP	P47	
Percent Building Cooled	18.0%		P48	
Average Winter Wind Speed	9.2	MPH	P49	
Average Summer Wind Speed	7.8	MPH	P50	
Crack Area Windward Diversity	5.0%		P51	

Average Space Temperatures - After implementation of EMS					
	Cooling		Heating		Description
Occupied	74.0	O55	73.0	Q55	average temperature for all areas
UnOccupied	85.0	O56	55.0	Q56	

Page content is subject to Confidentiality Restrictions

Project Template
Anthony Wayne-Middle School
Building Envelope Improvements

TMY-2 Weather Data for Newark, NJ								Operating Hours				Savings								
Amb. Temp Bin deg. F	Ave Temp deg. F	M.C.W.B deg. F	M.C. Enthalpy Btu/lbma	01-08 Hours	09-16 Hours	17-24 Hours	Total Bin Hours	Occ On-Peak Hrs.	UnOcc On-Peak Hrs.	Occ Off-Peak Hrs.	UnOcc Off-Peak Hrs.	Total Crack Area (ft^2)	Average Wind Speed (MPH)	Infiltration Flow Rate (CFM)	Occ. Heating / Cooling Savings (MBH)	UnOcc. Heating / Cooling Savings (MBH)	Occ. Cooling Savings (MMBTU)	UnOcc. Cooling Savings (MMBTU)	Occ. Heating Savings (MMBTU)	UnOcc. Heating Savings (MMBTU)
A	**B**	**C**	**D**	**E**	**F**	**G**	**H**	**I**	**J**	**K**	**L**	**M**	**N**	**O**	**P**	**Q**	**R**	**S**	**T**	**U**
Cooling																				
105 to 110	107.5	0.0	0.0	0	0	0	0	0	0	0	0	17.3	7.8	2,362	85	57	0	0		
100 to 105	102.5	0.0	0.0	0	0	0	0	0	0	0	0	17.3	7.8	2,362	73	45	0	0		
95 to 100	97.5	72.2	35.7	0	5	1	6	2	0	1	3	17.3	7.8	2,362	60	32	0	0		
90 to 95	92.5	73.8	37.3	0	33	7	40	16	0	4	20	17.3	7.8	2,362	47	19	0	0		
85 to 90	87.5	71.3	35.1	0	92	30	122	49	0	11	61	17.3	7.8	2,362	34	6	1	0		
80 to 85	82.5	69.2	33.2	8	330	162	500	202	0	46	252	17.3	7.8	2,362	22	0	2	0		
75 to 80	77.5	67.4	31.8	98	257	265	620	251	0	57	312	17.3	7.8	2,362	9	0	1	0		
70 to 75	72.5	64.6	29.7	325	236	286	847	343	0	77	427	17.3	7.8	2,362	0	0	0	0		
65 to 70	67.5	60.9	27.0	251	204	216	671	272	0	61	338	17.3	7.8	2,362	0	0	0	0		
60 to 65	62.5	56.3	24.0	358	268	301	927	375	0	85	467	17.3	7.8	2,362	0	0	0	0		
Heating																				
55 to 60	57.5	50.3	20.4	217	191	192	600	243	0	55	302	17.3	9.2	2,812	44	0			15	0
50 to 55	52.5	46.4	18.3	218	223	289	730	296	0	67	368	17.3	9.2	2,812	59	8			25	3
45 to 50	47.5	41.8	16.0	243	196	195	634	257	0	58	320	17.3	9.2	2,812	74	23			27	9
40 to 45	42.5	38.0	14.3	193	171	149	513	208	0	47	259	17.3	9.2	2,812	90	38			27	12
35 to 40	37.5	33.9	12.5	357	311	355	1,023	414	0	93	516	17.3	9.2	2,812	105	53			62	32
30 to 35	32.5	29.3	10.6	277	221	236	734	297	0	67	370	17.3	9.2	2,812	120	68			51	30
25 to 30	27.5	24.3	8.7	159	98	134	391	158	0	36	197	17.3	9.2	2,812	135	84			31	19
20 to 25	22.5	19.3	6.8	89	48	58	195	79	0	18	98	17.3	9.2	2,812	150	99			17	11
15 to 20	17.5	14.8	5.3	74	20	31	125	51	0	11	63	17.3	9.2	2,812	166	114			12	8
10 to 15	12.5	10.0	3.8	35	7	5	47	19	0	4	24	17.3	9.2	2,812	181	129			5	4
5 to 10	7.5	5.1	2.3	17	9	8	34	14	0	3	17	17.3	9.2	2,812	196	144			4	3
0 to 5	2.5	0.6	1.0	1	0	0	1	0	0	0	1	17.3	9.2	2,812	211	159			0	0
-5 to 0	(2.5)	0.0	0.0	0	0	0	0	0	0	0	0	17.3	9.2	2,812	226	175			0	0
-10 to -5	(7.5)	0.0	0.0	0	0	0	0	0	0	0	0	17.3	9.2	2,812	241	190			0	0
-15 to -10	(12.5)	0.0	0.0	0	0	0	0	0	0	0	0	17.3	9.2	2,812	257	205			0	0
-20 to -15	(17.5)	0.0	0.0	0	0	0	0	0	0	0	0	17.3	9.2	2,812	272	220			0	0
-25 to -20	(22.5)	0.0	0.0	0	0	0	0	0	0	0	0	17.3	9.2	2,812	287	235			0	0
				2,920	2,920	2,920	8,760	3,546	0	799	4,415						4	0	277	131

Cell Ref.	Comment
A-H	TMY-2 Weather Data for Newark, NJ
I - L	Occupied hours as per the RFP data
M	Total Crack area of windows and doors
N	Average wind speed during the cooling and heating seasons
O	= [col M] x [col N] x 5286 ÷ 60 x P51
P	= 1.08 x [col O] x (Q55 - [col B]) ÷ 1000 ÷ P46
Q	= 1.08 x [col O] x (Q56 - [col B]) ÷ 1000 ÷ P46
R	[col P] x ([col I] + [col K]) ÷ 1,000 ÷ P47 x P48
S	[col Q] x ([col J] + [col L]) ÷ 1,000 ÷ P47 x P48
T	[col P] x ([col I] + [col K]) ÷ 1,000 ÷ P46
U	[col Q] x ([col J] + [col L]) ÷ 1,000 ÷ P46

Assumptions:	Value	Unit	CELL	Description
			REF	
Door Crack Area	1.30	SF	**P43**	
Window Crack Area	0.00	SF	**P44**	
Soffit Crack Area	16.00	SF	**P45**	
Existing Boiler Plant Efficiency	85.3%		**P46**	
Existing Cooling Plant Efficiency	2.78	COP	**P47**	
Percent Building Cooled	100.0%		**P48**	
Average Winter Wind Speed	9.2	MPH	**P49**	
Average Summer Wind Speed	7.8	MPH	**P50**	
Crack Area Windward Diversity	20.0%		**P51**	

Average Space Temperatures - After implementation of EMS					
	Cooling		Heating		**Description**
Occupied	74.0	**O55**	72.0	**Q55**	average temperature for all areas
UnOccupied	85.0	**O56**	55.0	**Q56**	

Page content is subject to Confidentiality Restrictions

Project Template
Schuyler-Colfax-Middle School
Building Envelope Improvements

TMY-2 Weather Data for Newark, NJ								Operating Hours				Savings								
Amb. Temp Bin deg. F	Ave Temp deg. F	M.C.W.B deg. F	M.C. Enthalpy Btu/lbma	01-08 Hours	09-16 Hours	17-24 Hours	Total Bin Hours	Occ On-Peak Hrs.	UnOcc On-Peak Hrs.	Occ Off-Peak Hrs.	UnOcc Off-Peak Hrs.	Total Crack Area (ft^2)	Average Wind Speed (MPH)	Infiltration Flow Rate (CFM)	Occ. Heating / Cooling Savings (MBH)	UnOcc. Heating / Cooling Savings (MBH)	Occ. Cooling Savings (MMBTU)	UnOcc. Cooling Savings (MMBTU)	Occ. Heating Savings (MMBTU)	UnOcc. Heating Savings (MMBTU)
A	**B**	**C**	**D**	**E**	**F**	**G**	**H**	**I**	**J**	**K**	**L**	**M**	**N**	**O**	**P**	**Q**	**R**	**S**	**T**	**U**
Cooling																				
105 to 110	107.5	0.0	0.0	0	0	0	0	0	0	0	0	8.7	7.8	1,188	43	29	0	0		
100 to 105	102.5	0.0	0.0	0	0	0	0	0	0	0	0	8.7	7.8	1,188	37	22	0	0		
95 to 100	97.5	72.2	35.7	0	5	1	6	2	1	0	4	8.7	7.8	1,188	30	16	0	0		
90 to 95	92.5	73.8	37.3	0	33	7	40	13	3	0	24	8.7	7.8	1,188	24	10	0	0		
85 to 90	87.5	71.3	35.1	0	92	30	122	39	11	0	73	8.7	7.8	1,188	17	3	0	0		
80 to 85	82.5	69.2	33.2	8	330	162	500	159	44	0	298	8.7	7.8	1,188	11	0	0	0		
75 to 80	77.5	67.4	31.8	98	257	265	620	197	54	0	369	8.7	7.8	1,188	4	0	0	0		
70 to 75	72.5	64.6	29.7	325	236	286	847	269	74	0	504	8.7	7.8	1,188	0	0	0	0		
65 to 70	67.5	60.9	27.0	251	204	216	671	213	59	0	399	8.7	7.8	1,188	0	0	0	0		
60 to 65	62.5	56.3	24.0	358	268	301	927	294	81	0	552	8.7	7.8	1,188	0	0	0	0		
Heating																				
55 to 60	57.5	50.3	20.4	217	191	192	600	190	52	0	357	8.7	9.2	1,414	21	0			5	0
50 to 55	52.5	46.4	18.3	218	223	289	730	232	64	0	435	8.7	9.2	1,414	28	4			9	3
45 to 50	47.5	41.8	16.0	243	196	195	634	201	55	0	377	8.7	9.2	1,414	36	11			10	7
40 to 45	42.5	38.0	14.3	193	171	149	513	163	45	0	305	8.7	9.2	1,414	44	19			9	9
35 to 40	37.5	33.9	12.5	357	311	355	1,023	325	89	0	609	8.7	9.2	1,414	51	27			22	25
30 to 35	32.5	29.3	10.6	277	221	236	734	233	64	0	437	8.7	9.2	1,414	59	34			18	23
25 to 30	27.5	24.3	8.7	159	98	134	391	124	34	0	233	8.7	9.2	1,414	66	42			11	15
20 to 25	22.5	19.3	6.8	89	48	58	195	62	17	0	116	8.7	9.2	1,414	74	50			6	9
15 to 20	17.5	14.8	5.3	74	20	31	125	40	11	0	74	8.7	9.2	1,414	82	57			4	6
10 to 15	12.5	10.0	3.8	35	7	5	47	15	4	0	28	8.7	9.2	1,414	89	65			2	3
5 to 10	7.5	5.1	2.3	17	9	8	34	11	3	0	20	8.7	9.2	1,414	97	73			1	2
0 to 5	2.5	0.6	1.0	1	0	0	1	0	0	0	1	8.7	9.2	1,414	105	80			0	0
-5 to 0	(2.5)	0.0	0.0	0	0	0	0	0	0	0	0	8.7	9.2	1,414	112	88			0	0
-10 to -5	(7.5)	0.0	0.0	0	0	0	0	0	0	0	0	8.7	9.2	1,414	120	95			0	0
-15 to -10	(12.5)	0.0	0.0	0	0	0	0	0	0	0	0	8.7	9.2	1,414	128	103			0	0
-20 to -15	(17.5)	0.0	0.0	0	0	0	0	0	0	0	0	8.7	9.2	1,414	135	111			0	0
-25 to -20	(22.5)	0.0	0.0	0	0	0	0	0	0	0	0	8.7	9.2	1,414	143	118			0	0
				2,920	2,920	2,920	8,760	2,781	765	0	5,214						0	0	97	100

Cell Ref.	Comment
A-H	TMY-2 Weather Data for Newark, NJ
I - L	Occupied hours as per the RFP data
M	Total Crack area of windows and doors
N	Average wind speed during the cooling and heating seasons
O	= [col M] x [col N] x 5286 ÷ 60 x P51
P	= 1.08 x [col O] x (Q55 - [col B]) ÷ 1000 ÷ P46
Q	= 1.08 x [col O] x (Q56 - [col B]) ÷ 1000 ÷ P46
R	[col P] x ([col I] + [col K]) ÷ 1,000 ÷ P47 x P48
S	[col Q] x ([col J] + [col L]) ÷ 1,000 ÷ P47 x P48
T	[col P] x ([col I] + [col K]) ÷ 1,000 ÷ P46
U	[col Q] x ([col J] + [col L]) ÷ 1,000 ÷ P46

Assumptions:	Value	Unit	CELL	Description
			REF	
Door Crack Area	3.20	SF	**P43**	
Window Crack Area	0.00	SF	**P44**	
Soffit Crack Area	5.50	SF	**P45**	
Existing Boiler Plant Efficiency	76.0%		**P46**	
Existing Cooling Plant Efficiency	3.22	COP	**P47**	
Percent Building Cooled	20.0%		**P48**	
Average Winter Wind Speed	9.2	MPH	**P49**	
Average Summer Wind Speed	7.8	MPH	**P50**	
Crack Area Windward Diversity	20.0%		**P51**	

Average Space Temperatures - After implementation of EMS					
	Cooling		Heating		Description
Occupied	74.0	**O55**	71.0	**Q55**	average temperature for all areas
UnOccupied	85.0	**O56**	55.0	**Q56**	

Page content is subject to Confidentiality Restrictions

Project Template
George Washington-Middle School
Building Envelope Improvements

TMY-2 Weather Data for Newark, NJ								Operating Hours				Savings								
Amb. Temp Bin deg. F	Ave Temp deg. F	M.C.W.B deg. F	M.C. Enthalpy Btu/lbma	01-08 Hours	09-16 Hours	17-24 Hours	Total Bin Hours	Occ On-Peak Hrs.	UnOcc On-Peak Hrs.	Occ Off-Peak Hrs.	UnOcc Off-Peak Hrs.	Total Crack Area (ft^2)	Average Wind Speed (MPH)	Infiltration Flow Rate (CFM)	Occ. Heating / Cooling Savings (MBH)	UnOcc. Heating / Cooling Savings (MBH)	Occ. Cooling Savings (MMBTU)	UnOcc. Cooling Savings (MMBTU)	Occ. Heating Savings (MMBTU)	UnOcc. Heating Savings (MMBTU)
A	**B**	**C**	**D**	**E**	**F**	**G**	**H**	**I**	**J**	**K**	**L**	**M**	**N**	**O**	**P**	**Q**	**R**	**S**	**T**	**U**
Cooling																				
105 to 110	107.5	0.0	0.0	0	0	0	0	0	0	0	0	15.4	7.8	2,103	76	51	0	0		
100 to 105	102.5	0.0	0.0	0	0	0	0	0	0	0	0	15.4	7.8	2,103	65	40	0	0		
95 to 100	97.5	72.2	35.7	0	5	1	6	2	0	0	3	15.4	7.8	2,103	53	28	0	0		
90 to 95	92.5	73.8	37.3	0	33	7	40	16	0	1	23	15.4	7.8	2,103	42	17	0	0		
85 to 90	87.5	71.3	35.1	0	92	30	122	49	0	4	69	15.4	7.8	2,103	31	6	0	0		
80 to 85	82.5	69.2	33.2	8	330	162	500	202	0	16	282	15.4	7.8	2,103	19	0	0	0		
75 to 80	77.5	67.4	31.8	98	257	265	620	251	0	20	349	15.4	7.8	2,103	8	0	0	0		
70 to 75	72.5	64.6	29.7	325	236	286	847	343	0	27	477	15.4	7.8	2,103	0	0	0	0		
65 to 70	67.5	60.9	27.0	251	204	216	671	272	0	21	378	15.4	7.8	2,103	0	0	0	0		
60 to 65	62.5	56.3	24.0	358	268	301	927	375	0	29	522	15.4	7.8	2,103	0	0	0	0		
Heating																				
55 to 60	57.5	50.3	20.4	217	191	192	600	243	0	19	338	15.4	9.2	2,503	36	0			12	0
50 to 55	52.5	46.4	18.3	218	223	289	730	296	0	23	411	15.4	9.2	2,503	50	7			20	3
45 to 50	47.5	41.8	16.0	243	196	195	634	257	0	20	357	15.4	9.2	2,503	64	20			22	9
40 to 45	42.5	38.0	14.3	193	171	149	513	208	0	16	289	15.4	9.2	2,503	77	34			22	12
35 to 40	37.5	33.9	12.5	357	311	355	1,023	414	0	32	576	15.4	9.2	2,503	91	47			51	34
30 to 35	32.5	29.3	10.6	277	221	236	734	297	0	23	414	15.4	9.2	2,503	104	61			42	31
25 to 30	27.5	24.3	8.7	159	98	134	391	158	0	12	220	15.4	9.2	2,503	118	74			25	20
20 to 25	22.5	19.3	6.8	89	48	58	195	79	0	6	110	15.4	9.2	2,503	131	88			14	12
15 to 20	17.5	14.8	5.3	74	20	31	125	51	0	4	70	15.4	9.2	2,503	145	101			10	9
10 to 15	12.5	10.0	3.8	35	7	5	47	19	0	1	26	15.4	9.2	2,503	158	115			4	4
5 to 10	7.5	5.1	2.3	17	9	8	34	14	0	1	19	15.4	9.2	2,503	172	128			3	3
0 to 5	2.5	0.6	1.0	1	0	0	1	0	0	0	1	15.4	9.2	2,503	185	142			0	0
-5 to 0	(2.5)	0.0	0.0	0	0	0	0	0	0	0	0	15.4	9.2	2,503	199	155			0	0
-10 to -5	(7.5)	0.0	0.0	0	0	0	0	0	0	0	0	15.4	9.2	2,503	212	169			0	0
-15 to -10	(12.5)	0.0	0.0	0	0	0	0	0	0	0	0	15.4	9.2	2,503	226	182			0	0
-20 to -15	(17.5)	0.0	0.0	0	0	0	0	0	0	0	0	15.4	9.2	2,503	239	196			0	0
-25 to -20	(22.5)	0.0	0.0	0	0	0	0	0	0	0	0	15.4	9.2	2,503	253	210			0	0
				2,920	2,920	2,920	8,760	3,546	0	278	4,936						1	0	224	139

Cell Ref.	Comment
A-H	TMY-2 Weather Data for Newark, NJ
I - L	Occupied hours as per the RFP data
M	Total Crack area of windows and doors
N	Average wind speed during the cooling and heating seasons
O	= [col M] x [col N] x 5286 ÷ 60 x P51
P	= 1.08 x [col O] x (Q55 - [col B]) ÷ 1000 ÷ P46
Q	= 1.08 x [col O] x (Q56 - [col B]) ÷ 1000 ÷ P46
R	[col P] x ([col I] + [col K]) ÷ 1,000 ÷ P47 x P48
S	[col Q] x ([col J] + [col L]) ÷ 1,000 ÷ P47 x P48
T	[col P] x ([col I] + [col K]) ÷ 1,000 ÷ P46
U	[col Q] x ([col J] + [col L]) ÷ 1,000 ÷ P46

Assumptions:	Value	Unit	CELL	Description
			REF	
Door Crack Area	2.40	SF	P43	
Window Crack Area	0.00	SF	P44	
Soffit Crack Area	13.00	SF	P45	
Existing Boiler Plant Efficiency	80.0%		P46	
Existing Cooling Plant Efficiency	3.22	COP	P47	
Percent Building Cooled	23.0%		P48	
Average Winter Wind Speed	9.2	MPH	P49	
Average Summer Wind Speed	7.8	MPH	P50	
Crack Area Windward Diversity	20.0%		P51	

Average Space Temperatures - After implementation of EMS					
	Cooling		Heating		Description
Occupied	74.0	O55	71.0	Q55	average temperature for all areas
UnOccupied	85.0	O56	55.0	Q56	

Page content is subject to Confidentiality Restrictions

Project Template
Wayne Hills-High School
Building Envelope Improvements

TMY-2 Weather Data for Newark, NJ								Operating Hours				Savings								
Amb. Temp Bin deg. F	Ave Temp deg. F	M.C.W.B deg. F	M.C. Enthalpy Btu/lbma	01-08 Hours	09-16 Hours	17-24 Hours	Total Bin Hours	Occ On-Peak Hrs.	UnOcc On-Peak Hrs.	Occ Off-Peak Hrs.	UnOcc Off-Peak Hrs.	Total Crack Area (ft^2)	Average Wind Speed (MPH)	Infiltration Flow Rate (CFM)	Occ. Heating / Cooling Savings (MBH)	UnOcc. Heating / Cooling Savings (MBH)	Occ. Cooling Savings (MMBTU)	UnOcc. Cooling Savings (MMBTU)	Occ. Heating Savings (MMBTU)	UnOcc. Heating Savings (MMBTU)
A	**B**	**C**	**D**	**E**	**F**	**G**	**H**	**I**	**J**	**K**	**L**	**M**	**N**	**O**	**P**	**Q**	**R**	**S**	**T**	**U**
Cooling																				
105 to 110	107.5	0.0	0.0	0	0	0	0	0	0	0	0	42.5	7.8	2,612	94	63	0	0		
100 to 105	102.5	0.0	0.0	0	0	0	0	0	0	0	0	42.5	7.8	2,612	80	49	0	0		
95 to 100	97.5	72.2	35.7	0	5	1	6	2	0	1	3	42.5	7.8	2,612	66	35	0	0		
90 to 95	92.5	73.8	37.3	0	33	7	40	16	0	6	18	42.5	7.8	2,612	52	21	0	0		
85 to 90	87.5	71.3	35.1	0	92	30	122	49	0	19	54	42.5	7.8	2,612	38	7	0	0		
80 to 85	82.5	69.2	33.2	8	330	162	500	202	0	76	222	42.5	7.8	2,612	24	0	1	0		
75 to 80	77.5	67.4	31.8	98	257	265	620	251	0	94	275	42.5	7.8	2,612	10	0	0	0		
70 to 75	72.5	64.6	29.7	325	236	286	847	343	0	129	376	42.5	7.8	2,612	0	0	0	0		
65 to 70	67.5	60.9	27.0	251	204	216	671	272	0	102	298	42.5	7.8	2,612	0	0	0	0		
60 to 65	62.5	56.3	24.0	358	268	301	927	375	0	141	411	42.5	7.8	2,612	0	0	0	0		
Heating																				
55 to 60	57.5	50.3	20.4	217	191	192	600	243	0	91	266	42.5	9.2	3,109	52	0			23	0
50 to 55	52.5	46.4	18.3	218	223	289	730	296	0	111	324	42.5	9.2	3,109	69	8			37	4
45 to 50	47.5	41.8	16.0	243	196	195	634	257	0	96	281	42.5	9.2	3,109	86	25			40	9
40 to 45	42.5	38.0	14.3	193	171	149	513	208	0	78	227	42.5	9.2	3,109	102	42			38	13
35 to 40	37.5	33.9	12.5	357	311	355	1,023	414	0	155	454	42.5	9.2	3,109	119	59			89	35
30 to 35	32.5	29.3	10.6	277	221	236	734	297	0	111	325	42.5	9.2	3,109	136	76			73	32
25 to 30	27.5	24.3	8.7	159	98	134	391	158	0	59	173	42.5	9.2	3,109	153	92			44	21
20 to 25	22.5	19.3	6.8	89	48	58	195	79	0	30	86	42.5	9.2	3,109	170	109			24	12
15 to 20	17.5	14.8	5.3	74	20	31	125	51	0	19	55	42.5	9.2	3,109	186	126			17	9
10 to 15	12.5	10.0	3.8	35	7	5	47	19	0	7	21	42.5	9.2	3,109	203	143			7	4
5 to 10	7.5	5.1	2.3	17	9	8	34	14	0	5	15	42.5	9.2	3,109	220	159			5	3
0 to 5	2.5	0.6	1.0	1	0	0	1	0	0	0	0	42.5	9.2	3,109	237	176			0	0
-5 to 0	(2.5)	0.0	0.0	0	0	0	0	0	0	0	0	42.5	9.2	3,109	253	193			0	0
-10 to -5	(7.5)	0.0	0.0	0	0	0	0	0	0	0	0	42.5	9.2	3,109	270	210			0	0
-15 to -10	(12.5)	0.0	0.0	0	0	0	0	0	0	0	0	42.5	9.2	3,109	287	227			0	0
-20 to -15	(17.5)	0.0	0.0	0	0	0	0	0	0	0	0	42.5	9.2	3,109	304	243			0	0
-25 to -20	(22.5)	0.0	0.0	0	0	0	0	0	0	0	0	42.5	9.2	3,109	321	260			0	0
				2,920	2,920	2,920	8,760	3,546	0	1,329	3,885						2	0	398	143

Cell Ref.	Comment
A-H	TMY-2 Weather Data for Newark, NJ
I - L	Occupied hours as per the RFP data
M	Total Crack area of windows and doors
N	Average wind speed during the cooling and heating seasons
O	= [col M] x [col N] x 5286 ÷ 60 x P51
P	= 1.08 x [col O] x (Q55 - [col B]) ÷ 1000 ÷ P46
Q	= 1.08 x [col O] x (Q56 - [col B]) ÷ 1000 ÷ P46
R	[col P] x ([col I] + [col K]) ÷ 1,000 ÷ P47 x P48
S	[col Q] x ([col J] + [col L]) ÷ 1,000 ÷ P47 x P48
T	[col P] x ([col I] + [col K]) ÷ 1,000 ÷ P46
U	[col Q] x ([col J] + [col L]) ÷ 1,000 ÷ P46

Assumptions:	Value	Unit	CELL	Description
			REF	
Door Crack Area	4.20	SF	**P43**	
Window Crack Area	0.00	SF	**P44**	
Soffit Crack Area	38.30	SF	**P45**	
Existing Boiler Plant Efficiency	76.0%		**P46**	
Existing Cooling Plant Efficiency	3.66	COP	**P47**	
Percent Building Cooled	50.0%		**P48**	
Average Winter Wind Speed	9.2	MPH	**P49**	
Average Summer Wind Speed	7.8	MPH	**P50**	
Crack Area Windward Diversity	9.0%		**P51**	

Average Space Temperatures - After implementation of EMS					
	Cooling		Heating		**Description**
Occupied	74.0	**O55**	73.0	**Q55**	average temperature for all areas
UnOccupied	85.0	**O56**	55.0	**Q56**	

Page content is subject to Confidentiality Restrictions

Project Template
Wayne Valley-High School
Building Envelope Improvements

TMY-2 Weather Data for Newark, NJ								Operating Hours				Savings								
Amb. Temp Bin deg. F	Ave Temp deg. F	M.C.W.B deg. F	M.C. Enthalpy Btu/lbma	01-08 Hours	09-16 Hours	17-24 Hours	Total Bin Hours	Occ On-Peak Hrs.	UnOcc On-Peak Hrs.	Occ Off-Peak Hrs.	UnOcc Off-Peak Hrs.	Total Crack Area (ft^2)	Average Wind Speed (MPH)	Infiltration Flow Rate (CFM)	Occ. Heating / Cooling Savings (MBH)	UnOcc. Heating / Cooling Savings (MBH)	Occ. Cooling Savings (MMBTU)	UnOcc. Cooling Savings (MMBTU)	Occ. Heating Savings (MMBTU)	UnOcc. Heating Savings (MMBTU)
A	**B**	**C**	**D**	**E**	**F**	**G**	**H**	**I**	**J**	**K**	**L**	**M**	**N**	**O**	**P**	**Q**	**R**	**S**	**T**	**U**
Cooling																				
105 to 110	107.5	0.0	0.0	0	0	0	0	0	0	0	0	28.8	7.8	1,573	57	38	0	0		
100 to 105	102.5	0.0	0.0	0	0	0	0	0	0	0	0	28.8	7.8	1,573	48	30	0	0		
95 to 100	97.5	72.2	35.7	0	5	1	6	2	0	1	3	28.8	7.8	1,573	40	21	0	0		
90 to 95	92.5	73.8	37.3	0	33	7	40	16	0	3	20	28.8	7.8	1,573	31	13	0	0		
85 to 90	87.5	71.3	35.1	0	92	30	122	49	0	11	62	28.8	7.8	1,573	23	4	0	0		
80 to 85	82.5	69.2	33.2	8	330	162	500	202	0	43	254	28.8	7.8	1,573	14	0	0	0		
75 to 80	77.5	67.4	31.8	98	257	265	620	251	0	53	316	28.8	7.8	1,573	6	0	0	0		
70 to 75	72.5	64.6	29.7	325	236	286	847	343	0	73	431	28.8	7.8	1,573	0	0	0	0		
65 to 70	67.5	60.9	27.0	251	204	216	671	272	0	58	341	28.8	7.8	1,573	0	0	0	0		
60 to 65	62.5	56.3	24.0	358	268	301	927	375	0	80	472	28.8	7.8	1,573	0	0	0	0		
Heating																				
55 to 60	57.5	50.3	20.4	217	191	192	600	243	0	52	305	28.8	9.2	1,873	31	0			12	0
50 to 55	52.5	46.4	18.3	218	223	289	730	296	0	63	372	28.8	9.2	1,873	41	5			19	2
45 to 50	47.5	41.8	16.0	243	196	195	634	257	0	55	323	28.8	9.2	1,873	52	15			21	6
40 to 45	42.5	38.0	14.3	193	171	149	513	208	0	44	261	28.8	9.2	1,873	62	25			20	8
35 to 40	37.5	33.9	12.5	357	311	355	1,023	414	0	88	521	28.8	9.2	1,873	72	35			46	24
30 to 35	32.5	29.3	10.6	277	221	236	734	297	0	63	374	28.8	9.2	1,873	82	46			38	22
25 to 30	27.5	24.3	8.7	159	98	134	391	158	0	34	199	28.8	9.2	1,873	92	56			23	14
20 to 25	22.5	19.3	6.8	89	48	58	195	79	0	17	99	28.8	9.2	1,873	102	66			13	8
15 to 20	17.5	14.8	5.3	74	20	31	125	51	0	11	64	28.8	9.2	1,873	112	76			9	6
10 to 15	12.5	10.0	3.8	35	7	5	47	19	0	4	24	28.8	9.2	1,873	122	86			4	3
5 to 10	7.5	5.1	2.3	17	9	8	34	14	0	3	17	28.8	9.2	1,873	132	96			3	2
0 to 5	2.5	0.6	1.0	1	0	0	1	0	0	0	1	28.8	9.2	1,873	143	106			0	0
-5 to 0	(2.5)	0.0	0.0	0	0	0	0	0	0	0	0	28.8	9.2	1,873	153	116			0	0
-10 to -5	(7.5)	0.0	0.0	0	0	0	0	0	0	0	0	28.8	9.2	1,873	163	126			0	0
-15 to -10	(12.5)	0.0	0.0	0	0	0	0	0	0	0	0	28.8	9.2	1,873	173	137			0	0
-20 to -15	(17.5)	0.0	0.0	0	0	0	0	0	0	0	0	28.8	9.2	1,873	183	147			0	0
-25 to -20	(22.5)	0.0	0.0	0	0	0	0	0	0	0	0	28.8	9.2	1,873	193	157			0	0
				2,920	2,920	2,920	8,760	3,546	0	756	4,458						0	0	206	96

Cell Ref.	Comment
A-H	TMY-2 Weather Data for Newark, NJ
I - L	Occupied hours as per the RFP data
M	Total Crack area of windows and doors
N	Average wind speed during the cooling and heating seasons
O	= [col M] x [col N] x 5286 ÷ 60 x P51
P	= 1.08 x [col O] x (Q55 - [col B]) ÷ 1000 ÷ P46
Q	= 1.08 x [col O] x (Q56 - [col B]) ÷ 1000 ÷ P46
R	[col P] x ([col I] + [col K]) ÷ 1,000 ÷ P47 x P48
S	[col Q] x ([col J] + [col L]) ÷ 1,000 ÷ P47 x P48
T	[col P] x ([col I] + [col K]) ÷ 1,000 ÷ P46
U	[col Q] x ([col J] + [col L]) ÷ 1,000 ÷ P46

Assumptions:	Value	Unit	CELL	Description
			REF	
Door Crack Area	4.50	SF	**P43**	
Window Crack Area	0.50	SF	**P44**	
Soffit Crack Area	23.80	SF	**P45**	
Existing Boiler Plant Efficiency	78.0%		**P46**	
Existing Cooling Plant Efficiency	3.66	COP	**P47**	
Percent Building Cooled	13.0%		**P48**	
Average Winter Wind Speed	9.2	MPH	**P49**	
Average Summer Wind Speed	7.8	MPH	**P50**	
Crack Area Windward Diversity	8.0%		**P51**	

Average Space Temperatures - After implementation of EMS					
	Cooling		Heating		Description
Occupied	74.0	**O55**	73.0	**Q55**	average temperature for all areas
UnOccupied	85.0	**O56**	55.0	**Q56**	

Page content is subject to Confidentiality Restrictions

Project Template
Preakness (Library Community Center)
Building Envelope Improvements

TMY-2 Weather Data for Newark, NJ								Operating Hours				Savings								
Amb. Temp Bin deg. F	Ave Temp deg. F	M.C.W.B deg. F	M.C. Enthalpy Btu/lbma	01-08 Hours	09-16 Hours	17-24 Hours	Total Bin Hours	Occ On-Peak Hrs.	UnOcc On-Peak Hrs.	Occ Off-Peak Hrs.	UnOcc Off-Peak Hrs.	Total Crack Area (ft^2)	Average Wind Speed (MPH)	Infiltration Flow Rate (CFM)	Occ. Heating / Cooling Savings (MBH)	UnOcc. Heating / Cooling Savings (MBH)	Occ. Cooling Savings (MMBTU)	UnOcc. Cooling Savings (MMBTU)	Occ. Heating Savings (MMBTU)	UnOcc. Heating Savings (MMBTU)
A	**B**	**C**	**D**	**E**	**F**	**G**	**H**	**I**	**J**	**K**	**L**	**M**	**N**	**O**	**P**	**Q**	**R**	**S**	**T**	**U**
Cooling																				
105 to 110	107.5	0.0	0.0	0	0	0	0	0	0	0	0	2.8	7.8	382	14	9	0	0		
100 to 105	102.5	0.0	0.0	0	0	0	0	0	0	0	0	2.8	7.8	382	12	7	0	0		
95 to 100	97.5	72.2	35.7	0	5	1	6	1	1	0	4	2.8	7.8	382	10	5	0	0		
90 to 95	92.5	73.8	37.3	0	33	7	40	9	7	0	24	2.8	7.8	382	8	3	0	0		
85 to 90	87.5	71.3	35.1	0	92	30	122	27	23	0	73	2.8	7.8	382	6	1	0	0		
80 to 85	82.5	69.2	33.2	8	330	162	500	110	92	0	298	2.8	7.8	382	4	0	0	0		
75 to 80	77.5	67.4	31.8	98	257	265	620	137	114	0	369	2.8	7.8	382	1	0	0	0		
70 to 75	72.5	64.6	29.7	325	236	286	847	187	156	0	504	2.8	7.8	382	0	0	0	0		
65 to 70	67.5	60.9	27.0	251	204	216	671	148	124	0	399	2.8	7.8	382	0	0	0	0		
60 to 65	62.5	56.3	24.0	358	268	301	927	204	171	0	552	2.8	7.8	382	0	0	0	0		
Heating																				
55 to 60	57.5	50.3	20.4	217	191	192	600	132	111	0	357	2.8	9.2	455	8	0			1	0
50 to 55	52.5	46.4	18.3	218	223	289	730	161	135	0	435	2.8	9.2	455	10	1			2	1
45 to 50	47.5	41.8	16.0	243	196	195	634	140	117	0	377	2.8	9.2	455	13	4			2	2
40 to 45	42.5	38.0	14.3	193	171	149	513	113	95	0	305	2.8	9.2	455	15	6			2	3
35 to 40	37.5	33.9	12.5	357	311	355	1,023	225	189	0	609	2.8	9.2	455	18	9			5	9
30 to 35	32.5	29.3	10.6	277	221	236	734	162	135	0	437	2.8	9.2	455	20	11			4	8
25 to 30	27.5	24.3	8.7	159	98	134	391	86	72	0	233	2.8	9.2	455	23	14			3	5
20 to 25	22.5	19.3	6.8	89	48	58	195	43	36	0	116	2.8	9.2	455	25	16			1	3
15 to 20	17.5	14.8	5.3	74	20	31	125	28	23	0	74	2.8	9.2	455	28	18			1	2
10 to 15	12.5	10.0	3.8	35	7	5	47	10	9	0	28	2.8	9.2	455	30	21			0	1
5 to 10	7.5	5.1	2.3	17	9	8	34	7	6	0	20	2.8	9.2	455	32	23			0	1
0 to 5	2.5	0.6	1.0	1	0	0	1	0	0	0	1	2.8	9.2	455	35	26			0	0
-5 to 0	(2.5)	0.0	0.0	0	0	0	0	0	0	0	0	2.8	9.2	455	37	28			0	0
-10 to -5	(7.5)	0.0	0.0	0	0	0	0	0	0	0	0	2.8	9.2	455	40	31			0	0
-15 to -10	(12.5)	0.0	0.0	0	0	0	0	0	0	0	0	2.8	9.2	455	42	33			0	0
-20 to -15	(17.5)	0.0	0.0	0	0	0	0	0	0	0	0	2.8	9.2	455	45	36			0	0
-25 to -20	(22.5)	0.0	0.0	0	0	0	0	0	0	0	0	2.8	9.2	455	47	38			0	0
				2,920	2,920	2,920	8,760	1,929	1,617	0	5,214						0	0	23	37

Cell Ref.	Comment
A-H	TMY-2 Weather Data for Newark, NJ
I - L	Occupied hours as per the RFP data
M	Total Crack area of windows and doors
N	Average wind speed during the cooling and heating seasons
O	= [col M] x [col N] x 5286 ÷ 60 x P51
P	= 1.08 x [col O] x (Q55 - [col B]) ÷ 1000 ÷ P46
Q	= 1.08 x [col O] x (Q56 - [col B]) ÷ 1000 ÷ P46
R	[col P] x ([col I] + [col K]) ÷ 1,000 ÷ P47 x P48
S	[col Q] x ([col J] + [col L]) ÷ 1,000 ÷ P47 x P48
T	[col P] x ([col I] + [col K]) ÷ 1,000 ÷ P46
U	[col Q] x ([col J] + [col L]) ÷ 1,000 ÷ P46

Assumptions:	Value	Unit	CELL	Description
			REF	
Door Crack Area	2.80	SF	**P43**	
Window Crack Area	0.00	SF	**P44**	
Soffit Crack Area	0.00	SF	**P45**	
Existing Boiler Plant Efficiency	76.0%		**P46**	
Existing Cooling Plant Efficiency	2.64	COP	**P47**	
Percent Building Cooled	25.0%		**P48**	
Average Winter Wind Speed	9.2	MPH	**P49**	
Average Summer Wind Speed	7.8	MPH	**P50**	
Crack Area Windward Diversity	20.0%		**P51**	

Average Space Temperatures - After implementation of EMS					
	Cooling		Heating		Description
Occupied	74.0	**O55**	73.5	**Q55**	average temperature for all areas
UnOccupied	85.0	**O56**	55.0	**Q56**	

Page content is subject to Confidentiality Restrictions

Project Template
Board of Ed Administration
Building Envelope Improvements

TMY-2 Weather Data for Newark, NJ								Operating Hours				Savings								
Amb. Temp Bin deg. F	Ave Temp deg. F	M.C.W.B deg. F	M.C. Enthalpy Btu/lbma	01-08 Hours	09-16 Hours	17-24 Hours	Total Bin Hours	Occ On-Peak Hrs.	UnOcc On-Peak Hrs.	Occ Off-Peak Hrs.	UnOcc Off-Peak Hrs.	Total Crack Area (ft^2)	Average Wind Speed (MPH)	Infiltration Flow Rate (CFM)	Occ. Heating / Cooling Savings (MBH)	UnOcc. Heating / Cooling Savings (MBH)	Occ. Cooling Savings (MMBTU)	UnOcc. Cooling Savings (MMBTU)	Occ. Heating Savings (MMBTU)	UnOcc. Heating Savings (MMBTU)
A	**B**	**C**	**D**	**E**	**F**	**G**	**H**	**I**	**J**	**K**	**L**	**M**	**N**	**O**	**P**	**Q**	**R**	**S**	**T**	**U**
Cooling																				
105 to 110	107.5	0.0	0.0	0	0	0	0	0	0	0	0	13.2	7.8	901	35	22	0	0		
100 to 105	102.5	0.0	0.0	0	0	0	0	0	0	0	0	13.2	7.8	901	30	17	0	0		
95 to 100	97.5	72.2	35.7	0	5	1	6	2	0	0	4	13.2	7.8	901	25	12	0	0		
90 to 95	92.5	73.8	37.3	0	33	7	40	16	0	0	24	13.2	7.8	901	20	7	0	0		
85 to 90	87.5	71.3	35.1	0	92	30	122	49	0	1	72	13.2	7.8	901	15	2	0	0		
80 to 85	82.5	69.2	33.2	8	330	162	500	202	0	3	295	13.2	7.8	901	10	0	1	0		
75 to 80	77.5	67.4	31.8	98	257	265	620	251	0	4	365	13.2	7.8	901	5	0	1	0		
70 to 75	72.5	64.6	29.7	325	236	286	847	343	0	5	499	13.2	7.8	901	0	0	0	0		
65 to 70	67.5	60.9	27.0	251	204	216	671	272	0	4	395	13.2	7.8	901	0	0	0	0		
60 to 65	62.5	56.3	24.0	358	268	301	927	375	0	5	546	13.2	7.8	901	0	0	0	0		
Heating																				
55 to 60	57.5	50.3	20.4	217	191	192	600	243	0	4	354	13.2	9.2	1,073	17	0			5	0
50 to 55	52.5	46.4	18.3	218	223	289	730	296	0	4	430	13.2	9.2	1,073	23	3			9	2
45 to 50	47.5	41.8	16.0	243	196	195	634	257	0	4	374	13.2	9.2	1,073	28	9			10	4
40 to 45	42.5	38.0	14.3	193	171	149	513	208	0	3	302	13.2	9.2	1,073	34	14			9	6
35 to 40	37.5	33.9	12.5	357	311	355	1,023	414	0	6	603	13.2	9.2	1,073	40	20			22	16
30 to 35	32.5	29.3	10.6	277	221	236	734	297	0	4	433	13.2	9.2	1,073	46	26			18	15
25 to 30	27.5	24.3	8.7	159	98	134	391	158	0	2	230	13.2	9.2	1,073	52	32			11	10
20 to 25	22.5	19.3	6.8	89	48	58	195	79	0	1	115	13.2	9.2	1,073	57	38			6	6
15 to 20	17.5	14.8	5.3	74	20	31	125	51	0	1	74	13.2	9.2	1,073	63	43			4	4
10 to 15	12.5	10.0	3.8	35	7	5	47	19	0	0	28	13.2	9.2	1,073	69	49			2	2
5 to 10	7.5	5.1	2.3	17	9	8	34	14	0	0	20	13.2	9.2	1,073	75	55			1	1
0 to 5	2.5	0.6	1.0	1	0	0	1	0	0	0	1	13.2	9.2	1,073	81	61			0	0
-5 to 0	(2.5)	0.0	0.0	0	0	0	0	0	0	0	0	13.2	9.2	1,073	86	67			0	0
-10 to -5	(7.5)	0.0	0.0	0	0	0	0	0	0	0	0	13.2	9.2	1,073	92	72			0	0
-15 to -10	(12.5)	0.0	0.0	0	0	0	0	0	0	0	0	13.2	9.2	1,073	98	78			0	0
-20 to -15	(17.5)	0.0	0.0	0	0	0	0	0	0	0	0	13.2	9.2	1,073	104	84			0	0
-25 to -20	(22.5)	0.0	0.0	0	0	0	0	0	0	0	0	13.2	9.2	1,073	109	90			0	0
				2,920	2,920	2,920	8,760	3,546	0	52	5,162						2	0	98	65

Cell Ref.	Comment
A-H	TMY-2 Weather Data for Newark, NJ
I - L	Occupied hours as per the RFP data
M	Total Crack area of windows and doors
N	Average wind speed during the cooling and heating seasons
O	= [col M] x [col N] x 5286 ÷ 60 x P51
P	= 1.08 x [col O] x (Q55 - [col B]) ÷ 1000 ÷ P46
Q	= 1.08 x [col O] x (Q56 - [col B]) ÷ 1000 ÷ P46
R	[col P] x ([col I] + [col K]) ÷ 1,000 ÷ P47 x P48
S	[col Q] x ([col J] + [col L]) ÷ 1,000 ÷ P47 x P48
T	[col P] x ([col I] + [col K]) ÷ 1,000 ÷ P46
U	[col Q] x ([col J] + [col L]) ÷ 1,000 ÷ P46

Assumptions:	Value	Unit	CELL	Description
			REF	
Door Crack Area	0.10	SF	**P43**	
Window Crack Area	0.00	SF	**P44**	
Soffit Crack Area	13.10	SF	**P45**	
Existing Boiler Plant Efficiency	76.0%		**P46**	
Existing Cooling Plant Efficiency	2.64	COP	**P47**	
Percent Building Cooled	100.0%		**P48**	
Average Winter Wind Speed	9.2	MPH	**P49**	
Average Summer Wind Speed	7.8	MPH	**P50**	
Crack Area Windward Diversity	10.0%		**P51**	

Average Space Temperatures - After implementation of EMS					
	Cooling		Heating		Description
Occupied	72.0	**O55**	72.0	**Q55**	average temperature for all areas
UnOccupied	85.0	**O56**	55.0	**Q56**	

Page content is subject to Confidentiality Restrictions

Appendix for ECM 7:
Building Envelope Improvements

II. Manufacturer Specification Sheets

This page is intentionally left blank.

BEACON CITY SCHOOL DISTRICT

BUILDING ENVELOPE MEASURES

Measure	Manufacturer/ Product	Material Description
Roof-Wall Intersection Air Sealing	Dow/ Froth-Pak Foam Insulation	2-part spray polyurethane foam sealant
	Dow/ Thermax Sheathing	polyisocyanurate rigid board insulation
	Convenience Products/ Touch 'n Seal All Seasons	1-part polyurethane foam sealant
	DuPont/ Airtite Siliconized Acrylic Caulk	siliconized acrylic latex caulk
Overhang Air Sealing	Dow/ Froth-Pak Foam Insulation	2-part spray polyurethane foam sealant
	Dow/ Thermax Sheathing	polyisocyanurate rigid board insulation
	Convenience Products/ Touch 'n Seal All Seasons	1-part polyurethane foam sealant
Door Weather Stripping	Visco Products/ DS050 Door Weather Stripping	aluminum extrusion with Q-Lon soft cell foam insert
	Visco Products/ DXL1000 Door Weather Stripping	aluminum extrusion with Q-Lon soft cell foam insert
	Visco Products/ OBS296 Door Weather Stripping	aluminum extrusion with offset nylon brush insert
	Visco Products/ BS88 Pressure Sensitive Gasket	surface mount bulb gasket
	Visco Products/ BS196 Door Weather Stripping	aluminum extrusion with nylon brush insert
	Visco Products/ BS596 Door Weather Stripping	aluminum extrusion with nylon brush insert
	Visco Products/ FS325 Door Weather Stripping	aluminum extrusion with wool pile brush/ fin insert
	Visco Products/ FS300 Door Weather Stripping	aluminum extrusion with wool pile brush/ fin insert
	Visco Products/ TS150 Door Triple Sweep	aluminum extrusion with 1" vinyl insert
	Visco Products/ TS100 Door Triple Sweep	aluminum extrusion with 3/4" vinyl insert
Door Casing Sealing	DuPont/ Airtite Siliconized Acrylic Caulk	siliconized acrylic latex caulk
	Convenience Products/ Touch 'n Seal All Seasons	1-part polyurethane foam sealant
Window Weatherization/ Weather Stripping	Schlegel Systems/ PF-102 Polyflex Weatherseal (Visco)	surface mount weather strip
	Schlegel Systems/ PF-114 Polyflex Weatherseal (Visco)	surface mount weather strip
	Schlegel Systems/ PF-512 Polyflex Weatherseal (Visco)	surface mount weather strip
	Visco Products/ BS88 Pressure Sensitive Gasket (Visco)	surface mount bulb gasket
	DuPont/ Airtite Siliconized Acrylic Caulk	siliconized acrylic latex caulk
	DuPont/ Window & Door Premier Silicone	silicone rubber sealant
Window Casing Sealing	DuPont/ Airtite Siliconized Acrylic Caulk	siliconized acrylic latex caulk
	Convenience Products/ Touch 'n Seal All Seasons	1-part polyurethane foam sealant

Note: Product Data Sheets are included in this Submittal Report in alphabetical order by the company name of the manufacturer.

TECH DATA SHEET

1. PRODUCT NAME
Touch 'n Seal All Seasons Gun Foam Sealant 24 ounce (680 gm)
Item # 4004529812

2. MANUFACTURER
Convenience Products
866 Horan Dr., Fenton, MO 63026 USA
(636) 349-5855
(800) 325-6180
FAX (636) 349-5335
E-mail support@touch-n-seal.com
Website: www.touch-n-seal.com

3. PRODUCT DESCRIPTION
Touch 'n Seal All Seasons one-component, moisture curing polyurethane foam sealant is uniquely formulated to perform under difficult low temperature conditions where traditional polyurethane foam sealants fail to cure. All Seasons Gun Foam cures at temperatures as low as 20°F (-7°C) and as high as 120°F (49°C). All Seasons Gun Foam meets the insulating and air sealing requirements of professional commercial, industrial, agricultural and residential contractors who must work in extreme temperatures. All Seasons Gun Foam is non-toxic, fire-retardant, non-shrinking and permanently fills and seals cracks and gaps.

Basic Use
Use Touch 'n Seal All Seasons Gun Foam when an application must be made during extreme low or high temperatures. All Seasons Gun Foam seals cracks and gaps up to ½ inch (12mm) wide, providing a permanent insulating and air sealing solution to most building component materials, including: wood, concrete, insulating foam boards, metal, plastics and sheetrock.

The Touch 'n Seal All Seasons Gun Foam protects against both vapor migration and energy robbing air infiltration, helps to improve indoor air quality and provides superior insulation performance.

Composition & Materials
Touch 'n Seal All Seasons Gun Foam is permanent and dries within minutes of application.

Sizes
All Seasons Gun Foam – Item # 4004529812 - 24 ounce (680 gm)

Benefits
- Use in temperatures as low as 20°F (-7°C) and as high as 120°F (49°C)
- Provides a permanent seal against air, moisture and insect infiltration
- Permanent installation; does not shrink or settle as do many caulk type sealants
- Compatible with all fiber insulation systems including cellulose, fiberglass and rockwool
- Bonds to common building materials, including: wood, concrete, insulating foam boards, metal, plastics and sheetrock
- Expands to fill gaps up to ½" (12mm) wide reducing air exchanges
- Reduces energy loss by as much as 40%
- Reduces use of fossil fuels and improves air quality
- No Ozone Depleting Chemicals
- Helps to reduce Greenhouse Gas Emissions
- Closed cell structure
- Allows for down sized HVAC systems; uses less energy, fewer cycle times, more consistent "comfort level", reduces equipment maintenance
- Outperforms fiberglass
- Fire retardant

Limitations
- Do not expose to temperatures above 250°F (121°C), open flames or sparks.
- Not for exposure to ultraviolet light.
- Chemicals must be 60°F (16°C) - 90°F (32°C) prior to dispensing.
- Do not store in temperatures above 120°F.
- Always refer to local building code regulations.
- Do not leave product exposed – cover with approved facings.
- Flammable propellant. Read MSDS and do not use near high heat, sparks or open flame.

4. TECHNICAL DATA
Applicable Standards
- ASTM E84 Surface Burning Characteristics
- ASTM C518 R-Value
- ASTM D1622 Density
- ASTM D2856 Closed Cell Content

Approvals/Certifications
- International Building Code
- International Residential Code
- BOCA National Building Code
- 1999 Standard Building Code
- 1997 Standard Building Code
- ICC-Evaluation Services

Physical/Chemical Properties
See Table. Test data available upon request.

Shelf Life
12 months in unopened container when stored between 60°-90°F (16°-32°C), in a dry, well ventilated area.

Storage & Disposal
Keep containers tightly closed in a cool, well ventilated area. Ideal storage temperature is 60°-90°F (16°-32°C). Storage above 90°F (32°C) will reduce shelf life. Do not store at temperatures above 120°F (49°C). Do not expose containers to conditions that may damage, puncture, or burst the containers. Dispose of leftover material/containers in accordance with Federal, state and local regulations. See Material Safety Data Sheet for more information.

5. INSTALLATION/APPLICATION
Always refer to local building codes prior to application of Touch 'n Seal foam.

The Touch 'n Seal All Seasons Gun Foam can be applied to and will adhere to almost any traditional construction surfaces, including: wood, concrete, polystyrene, gypsum board, fiberboard, masonry and metal.

Surfaces to receive Touch 'n Seal All Seasons Gun Foam must be dry, clean and free of dust, dirt, grease and other substances that may inhibit proper adhesion. Fill application area about 1/3 full, leaving room for foam to expand.

TECH DATA SHEET

For best results apply Touch 'n Seal All Seasons Gun Foam when surface and ambient temperatures are between 60°-90°F (16°-32°C). Touch 'n Seal All Seasons Gun Foam may be applied to ambient and surface temperatures as low as 20°F (-7°C) and as high as 120°F (49°C). Chemical contents must be between 70°- 90°F (21°-32°C) before dispensing.
Use all chemical contents within 30 days of initial dispensing. Clean uncured foam from applicator tools with Touch 'n Seal Poly-Clean.

Keep out of reach of children.

Always wear proper personal protective equipment, including gloves, clothing and eyewear. Use in well ventilated area.

See material safety data sheet for additional warnings and information.

Please refer to manufacturers' instructions or request a faxed set of instructions from Convenience Products by calling Customer Service at 800-325-6180.

6. Availability & Cost
Availability
Touch 'n Seal polyurethane foams are available throughout the U.S., Canada, Mexico and the world. Contact Convenience Products Customer Service at 800-325-6180 or FAX 636-349-1708 for distributor information.

Cost
Contact Convenience Products for local distributors who can provide cost and delivery information.

7. Warranty
Convenience Products warrants All Seasons Gun Foam to be free of defects in workmanship and function.

Convenience Products is not liable for any incidental, consequential or any other damages or remedies. There are no Warranties that extend beyond the description herein, however, certain states have specific laws regarding limitation on incidental or consequential damages, in which case, and you may have other legal rights.

8. Maintenance
None.

9. Technical Services
Technical assistance, including more detailed information, product literature, test results, assistance with preparing project specifications and application training is available by contacting Convenience Products Customer Service.

10. Filing Systems
Additional information is available from the manufacturer upon request.

TYPICAL PROPERTIES OF TOUCH 'N SEAL ALL SEASONS GUN FOAM

Shelf Life	1 year; unopened container
Dry time/Tack Free Time	10 minutes
Fully Cured	Approximately 1 hour
Cuttable	30 minutes
ASTM E84 Surface Burning Characteristics Flame Spread Smoke Development	 5 10
ASTM C518 R-Value	7.12 /in.
ASTM C1536 Yield for Aerosol Foam Sealants	2,200 ft (670m) @ ¼" (6mm)
ASTM D1622 Density	1.9 ± .10 pcf
International Building Code	Conforms
International Residential Code	Conforms
BOCA National Building Code	Conforms
1999 Standard Building Code	Conforms
1997 Standard Building Code	Conforms
ICC-ES	Listed ESR 1926

Convenience Products
866 Horan Drive, Fenton, MO 63026 USA
(800) 325-6180, (636) 349-5855 Tel.

FROTH-PAK™ Foam Insulation

1. PRODUCT NAME

FROTH-PAK™ Foam Insulation

2. MANUFACTURER

The Dow Chemical Company
Dow Building Solutions
200 Larkin
Midland, MI 48674
1-866-583-BLUE (2583)
Fax 1-989-832-1465

www.dowbuildingsolutions.com

3. PRODUCT DESCRIPTION

BASIC USE

FROTH-PAK™ Foam Insulation is a two-component, quick-cure polyurethane foam that fills cavities, penetrations, cracks and expansion joints. Unlike one-component foam, FROTH-PAK™ Foam Insulation is a chemically cured foam, significantly reducing curing time.

FROTH-PAK™ Foam Insulation dispenses, expands and becomes tack-free in seconds. The product will skin over in 30-40 seconds and will be completely cured in minutes.*

The Class-A rating (flame spread of 25 or less) of FROTH-PAK™ Foam Insulation allows its use in a wide range of interior and exterior industrial, commercial, institutional and residential settings. Check with local codes prior to use. If used in an exterior setting, a coating must be applied for ultraviolet (UV) protection.

SIZES

FROTH-PAK™ Foam Insulation is typically sold as a complete 42 lb (FROTH-PAK™ 200) portable kit that includes pressurized “A” and “B” cylinders, plus dispensing gun/hose assembly and accessories. FROTH-PAK™ Foam Insulation is also available in refillable, returnable cylinders for commercial applications requiring a large amount of foam. See Table 1 for yield and size information.

4. TECHNICAL DATA

APPLICABLE STANDARDS

ASTM International

- C203 – Standard Test Methods for Breaking Load and Flexural Properties of Block-Type Thermal Insulation
- C273 – Standard Test Method for Shear Properties of Sandwich Core Materials
- C518 – Standard Test Method for Steady-State Thermal Transmission Properties by Means of the Heat Flow Meter Apparatus
- D1621 – Standard Test Method for Compressive Properties of Rigid Cellular Plastics
- D1622 – Standard Test Method for Apparent Density of Rigid Cellular Plastics
- D1623 – Standard Test Method for Tensile and Tensile Adhesion Properties of Rigid Cellular Plastics
- D2842 – Standard Test Method for Water Absorption of Rigid Cellular Plastics
- E96 – Standard Test Methods for Water Vapor Transmission of Materials
- E283 – Standard Test Method for Determining Rate of Air Leakage Through Exterior Windows, Curtain Walls and Doors Under Specified Pressure Differences Across the Specimen
- E2178 – Standard Test Method for Air Permeance of Building Materials

PHYSICAL PROPERTIES

FROTH-PAK™ Foam Insulation exhibits the typical properties and characteristics indicated in Table 2 when tested as represented.

FIRE PROTECTION

Cured FROTH-PAK™ foam is combustible and will burn if exposed to open flame or sparks from high-energy sources. Do not expose to temperatures above 240°F.

CODE COMPLIANCES

FROTH-PAK™ Foam Insulation complies with the following codes:

- Underwriters Laboratories, Inc. (UL) Classified, see Classification Certificate R7813
- National Fire Protection Association – per NFPA 286 testing, can be left exposed in non-fire-resistant rated roof/wall junctures, maximum 6" high and 2" deep (unlimited width)

Contact your Dow sales representative or local authorities for state and local building code requirements and related acceptances.

5. INSTALLATION

Complete operating instructions are provided with each FROTH-PAK™ Foam Insulation purchase. Read all information and cautions before application. **Note: Avoid overfilling restricted spaces. Chemicals exert force during reaction, and expansion of foam may result in substrate deformation.**

TABLE 1: SIZES AND THEORETICAL YIELDS FOR FROTH-PAK™ FOAM INSULATION

PRODUCT	THEORETICAL YIELD(1), BOARD FT
Kits	
FROTH-PAK™ 200	200
FROTH-PAK™ 620	620
Refillable Cylinders (commercial use)	
FROTH-PAK™ 17 (gal)	2,060
FROTH-PAK™ 60 (gal)	6,860
FROTH-PAK™ 120 (gal)	15,430
FROTH-PAK™ 350 (gal)	43,890

(1) The theoretical yield has become an industry standard for identifying certain sizes of two-component kits. Theoretical yield calculations are performed in perfect laboratory conditions, without taking into account the loss of blowing agent or the variations in application methods and types.

®™Trademark of The Dow Chemical Company (“Dow”) or an affiliated company of Dow
*Actual cure time will depend on temperature, foam thickness, the specific nozzle used, etc.

SAFETY AND CONDITIONS OF USE

- Read the instructions and Material Safety Data Sheets carefully before use.
- FROTH-PAK™ spray polyurethane foam contains isocyanate, hydrofluorocarbon blowing agent and polyol. Do not breathe vapor or mist. Use only in well-ventilated areas or with proper respiratory protection. Supplied air or an approved air-purifying respirator equipped with an organic vapor sorbent and a P100 particulate filter may be required to maintain exposure levels below ACGIH, OSHA, WEEL or other applicable limits. For situations where the atmospheric levels may exceed the level for which an air-purifying respirator is effective, use a positive-pressure, air-supplying respirator (air line or self-contained breathing apparatus).
- Isocyanate is irritating to the eyes, skin and respiratory system, and may cause sensitization by inhalation or skin contact.
- FROTH-PAK™ foam will adhere to most surfaces and skin. Do not get foam on skin. Wear protective clothing (including long sleeves), gloves, and goggles or safety glasses. Cured foam must be mechanically removed or allowed to wear off in time.
- The contents are under pressure.
- FROTH-PAK™ foam should not be used around heaters, furnaces, fireplaces, recessed lighting fixtures or other applications where the foam may come in contact with heat-conducting surfaces. Cured FROTH-PAK™ foam is combustible and will burn if exposed to open flame or sparks from high-energy sources. Do not expose to temperatures above 240°F.

Visit www.dowbuildingsolutions.com or contact a local Dow representative for more specific instructions.

TABLE 2: TYPICAL PHYSICAL PROPERTIES OF FROTH-PAK™ FOAM INSULATION

PROPERTY AND TEST METHOD	VALUE
Flame Spread/Smoke Developed(1)(2), ASTM E84/UL 723	25/350
Nominal Density, ASTM D1622, lb/ft^3	1.75
Thermal Resistance(3) per inch, ASTM C518, ft^2•h•°F/Btu, R-value, min.	
Initial	6.6
Aged 90 days at 140°F	5.6
Air Leakage,	
ASTM E283, cfm/ft^2 @ 1.57 psf	0
ASTM E2178, L/s/m^2 @ 75 Pa	0
Water Vapor Permeance, ASTM E96	
perm @ 1" thick	3.9
perm @ 2" thick	2.0
Water Absorption, ASTM D2842, % by volume	2.17
Dimensional Stability, ASTM D2126, % volume change	
100°F/100% RH @ 1wk	4.6
100°F/100% RH @ 2wks	5.0
158°F/100% RH @ 1wk	6.5
158°F/100% RH @ 2wks	5.1
-40°F/amb RH @ 1wk	0.9
-40°F/amb RH @ 2wks	0.9
158°F/amb RH @ 1wk	3.1
158°F/amb RH @ 2wks	2.3
Compressive Strength, ASTM D1621, lb/in^2, parallel	21.1
Flexural Strength, ASTM C203, lb/in^2, parallel	22.7
Tensile Strength, ASTM D1623, lb/in^2, parallel	26.7
Shear Strength, ASTM C273, lb/in^2, parallel	16.7
Maximum Service Temperature, °F	240

(1) Tested at 2" thickness, full coverage.
(2) This numerical flame spread rating is not intended to reflect hazards presented by this or any other material under actual fire conditions.
(3) R means resistance to heat flow. The higher the R-value, the greater the insulating power.

6. AVAILABILITY

FROTH-PAK™ Foam Insulation is distributed through an extensive network. For more information, call 1-800-232-2436.

7. WARRANTY

Not applicable.

8. MAINTENANCE

Not applicable.

9. TECHNICAL SERVICES

Dow can provide technical information to help address questions when using FROTH-PAK™ Foam Insulation. Technical personnel are available to assist with any insulation project. For technical assistance, call 1-866-583-BLUE (2583).

10. FILING SYSTEMS

- www.dowbuildingsolutions.com
- www.sweets.com

www.dowbuildingsolutions.com

Technical Information
1-866-583-BLUE (2583)
Sales Information
1-800-232-2436

THE DOW CHEMICAL COMPANY
200 Larkin
Midland, MI 48674

NOTICE: No freedom from any patent owned by Dow or others is to be inferred. Because use conditions and applicable laws may differ from one location to another and may change with time, Customer is responsible for determining whether products and the information in this document are appropriate for Customer's use and for ensuring that Customer's workplace and disposal practices are in compliance with applicable laws and other government enactments. The product shown in this literature may not be available for sale and/or available in all geographies where Dow is represented. The claims made may not have been approved for use in all countries or regions. Dow assumes no obligation or liability for the information in this document. References to "Dow" or the "Company" mean the Dow legal entity selling the products to Customer unless otherwise expressly noted. NO EXPRESS WARRANTIES ARE GIVEN EXCEPT FOR ANY APPLICABLE WRITTEN WARRANTIES SPECIFICALLY PROVIDED BY DOW. ALL IMPLIED WARRANTIES INCLUDING THOSE OF MERCHANTABILITY AND FITNESS FOR A PARTICULAR PURPOSE ARE EXPRESSLY EXCLUDED.

Dow Polyurethane Foam Insulation and Sealants
CAUTION: When cured, these products are combustible and will burn if exposed to open flame or sparks from high-energy sources. Do not expose to temperatures above 240°F. For more information, consult MSDS, call Dow at 1-866-583-BLUE (2583) or contact your local building inspector. In an emergency, call 1-989-636-4400.

FROTH-PAK™ spray polyurethane foam contains isocyanate, hydrofluorocarbon blowing agent and polyol. Read the instructions and Material Safety Data Sheets carefully before use. Wear protective clothing (including long sleeves), gloves, goggles or safety glasses, and proper respiratory protection. Supplied air or an approved air-purifying respirator equipped with an organic vapor sorbent and a P100 particulate filter may be required to maintain exposure levels below ACGIH, OSHA, WEEL or other applicable limits. Provide adequate ventilation. Contents under pressure.

Building and/or construction practices unrelated to building materials could greatly affect moisture and the potential for mold formation. No material supplier including Dow can give assurance that mold will not develop in any specific system.

®™Trademark of The Dow Chemical Company ("Dow") or an affiliated company of Dow
Form No. 179-04478X-0311P&M

THERMAX™ Sheathing

1. PRODUCT NAME

THERMAX™ Sheathing

2. MANUFACTURER

The Dow Chemical Company
Dow Building Solutions
200 Larkin
Midland, MI 48674
1-866-583-BLUE (2583)
Fax 1-989-832-1465

www.dowbuildingsolutions.com

3. PRODUCT DESCRIPTION

THERMAX™ Sheathing is a non-structural, rigid board insulation consisting of a glass-fiber-infused polyisocyanurate foam core laminated between 1.0 mil smooth, reflective aluminum facers on both sides. The glass-fiber reinforcement contributes to improved fire performance and dimensional stability. THERMAX™ Sheathing can be installed exposed to the interior without a thermal barrier.

THERMAX™ Sheathing offers high, long-term R-value. Used in conjunction with the appropriate joint closure system for the application, THERMAX™ Sheathing with its low perm rating helps to reduce moisture condensation within and behind the insulation.

BASIC USE

THERMAX™ Sheathing is specially designed to have a Class A fire rating and can be used in a range of concealed and exposed applications, above and below grade, and can be used in exterior walls. Because of its improved fire performance, THERMAX™ Sheathing is especially appropriate for hourly rated assemblies. THERMAX™ Sheathing is approved for use, per Section 2603.5 of the International Building Code, in Exterior Walls of Types I,II,III and IV construction. THERMAX™ Sheathing is designed for use as continuous insulation in both interior and exterior applications to assist in meeting and exceeding both the most current IECC and the ASHRAE 90.1 energy standards. Maximum length is 30 ft. (9.1 m) and maximum thickness is 4.25" (108 mm).

4. TECHNICAL DATA

APPLICABLE STANDARDS

THERMAX™ Sheathing meets ASTM C1289 – Standard Specification for Faced Rigid Cellular Polyisocyanurate Thermal Insulation Board, Type I, Class 2. Applicable standards include:

- C203 – Standard Test Methods for Breaking Load and Flexural Properties of Block-Type Thermal Insulation
- C209 – Standard Test Methods for Cellulosic Fiber Insulating Board
- C518 – Standard Test Method for Steady-State Thermal Transmission Properties by Means of the Heat Flow Meter Apparatus
- D1621 – Standard Test Method for Compressive Properties of Rigid Cellular Plastics
- D2126 – Standard Test Method for Response of Rigid Cellular Plastics to Thermal and Humid Aging
- E96 – Standard Test Method for Water Vapor Transmission of Materials
- D1623 – Standard Test Method for Tensile and Tensile Adhesion Properties of Rigid Cellular Plastics

TYPICAL PHYSICAL PROPERTIES

THERMAX™ Sheathing exhibits the typical physical properties and characteristics indicated in Table 2 when tested as represented.

ENVIRONMENTAL DATA

THERMAX™ Sheathing is manufactured with a zero ozone depleting potential. The use of THERMAX™ Sheathing helps reduce the carbon footprint of commercial buildings.

FIRE INFORMATION

THERMAX™ Sheathing products should be used only in strict accordance with product application instructions. THERMAX™ products are combustible and when used in a building containing combustible materials, may contribute to the spread of fire. For more information, consult MSDS and/or call Dow at 1-866-583-BLUE (2583). In an emergency, call 1-989-636-4400.

CODE COMPLIANCES

THERMAX™ Sheathing complies with the following codes:

- ASTM E2178 Standard Test Method for Air Permeance of Building Materials - leakage rates less than 0.001 L/s/m^2 at a test pressure of 75 Pa.
- ASTM E283 Standard Test Method for Determining Rate of Air Leakage through Exterior Windows, Curtain Walls, and Doors under specified Pressure differences across the specimen. Results were <0.02 L/s/m^2
- ASTM E2357 Standard Test Method for Determining Air Leakage of Air Barrier Assemblies - no leakage
- ASTM E331 Standard Test Method for Water Penetration of Exterior Windows, Skylights, Doors, and Curtain Walls by Uniform Static Air Pressure Difference - no leakage
- 2009 International Residential Code (IRC) Section 316
- 2009 International Building Code (IBC) Section 2603
- ICC-ES ESR-1659
- FM 4880 – Wall-Ceiling Construction Metal-Faced – Class 1 Fire Rated to Max. 30' Exposure High, 4.25" Thick, 4' Wide, When Installed as Described in the Current Edition of FMRC Approval Guide
- FM 4450 Approval Standard for Class 1 Insulated - Steel Deck Roofs
- THERMAX™ products are covered under Underwriters Laboratories Inc. (UL) File R5622
- UL 1256 – Fire Test of Roof Deck Constructions, Roof Deck Construction No. 120 and No. 123
- UL 723 (ASTM E84) Surface Burning Characteristics of Building Materials
- The following designs are 1, 2, 3 or 4 hour wall rated assemblies as listed in the UL Fire Resistance Directory: U026, U326, U330, U354, U355, U424, U425, U460, U902, U904, U905, U906, U907, V454, V482, V499

®™Trademark of The Dow Chemical Company ("Dow") or an affiliated company of Dow

- Fire Performance Evaluation of an Exterior Masonry Wall System Incorporating THERMAX™ Insulation Tested in Accordance With NFPA 285, 2006 Edition (UBC 26.9, intermediate scale – multistory testing)
- FMVSS No. 302 – Flammability of Interior Materials – Passenger Cars, Multipurpose Passenger Vehicles, Trucks and Buses (Docket No. 3-3; Notice 4)
- Miami-Dade NOA 08-0320.01 Interior Insulation on CMU Block

Contact your Dow sales representative or local authorities for state and local building code requirements and related acceptances.

5. INSTALLATION

Boards of THERMAX™ Sheathing are lightweight and can be sawed or cut with a knife. They install quickly to walls (girts, steel stud, tilt-up, block, wood) and ceilings – inside and outside of purlins, trusses or bar joints. Butt joints must be installed over structural members. "Best practice" recommendations for high-humidity environments include continuously sealing the surface of the insulation at all joints with a Dow joint closure system.
Contact a local Dow representative or access the literature library at www.dowbuildingsolutions.com for more specific instructions.

6. AVAILABILITY

THERMAX™ Sheathing is manufactured in several locations and is distributed through an extensive network. For more information, call 1-800-232-2436.

7. WARRANTY

Fifteen-year limited warranty is available. Contact your Dow representative for details.

8. MAINTENANCE

Not applicable.

9. TECHNICAL SERVICES

Dow can provide technical information to help address questions when using THERMAX™ Sheathing. Technical personnel are available to assist with any insulation project. For technical assistance, call 1-866-583-BLUE (2583).

10. FILING SYSTEMS

- www.dowbuildingsolutions.com
- www.DowMetalBuilding.com

TABLE 1: SIZES, R-VALUES AND EDGE TREATMENTS FOR THERMAX™ SHEATHING

NOMINAL BOARD THICKNESS[1], IN.	R-VALUE[2][3]	BOARD SIZE, FT	EDGE TREATMENT
.50	3.3	4 x 8, 4 x 9, 4 x 10	Square Edge
.75	5.0	4 x 8, 4 x 9, 4 x 10	Square Edge
1.0	6.5	4 x 8, 4 x 9, 4 x 10	Square Edge
1.5	9.8	4 x 8, 4 x 9, 4 x 10	Square Edge, Shiplap
2.0	13.0	4 x 8, 4 x 9, 4 x 10	Square Edge, Shiplap

(1) Contact your Dow seller for information at different R-values and other sizes and lead time requirements. Not all product sizes are available in all regions.
(2) R means resistance to heat flow. The higher the R-value, the greater the insulating power. Stabilized R-values @ 75°F mean temperature determined in accordance with ASTM C518. R-values expressed in $ft^2 \cdot h \cdot °F/Btu$.
(3) An additional 2.77 R-value may be added to the system R-value, when a minimum 3/4" ideal air space and horizontal heat flow are present in accordance with the ASHRAE Fundamentals Handbook on FTC, 16 CFR Part 460.

TABLE 2: TYPICAL PHYSICAL PROPERTIES OF THERMAX™ SHEATHING

PROPERTY AND TEST METHOD	VALUE
Compressive Strength[1], ASTM D1621, psi, min.	25
Flexural Strength, ASTM C203, psi, min.	40
Water Absorption, ASTM C209, % by volume, max.	0.1
Water Vapor Permeance, ASTM E96, perm, max.	<0.03
Maximum Use Temperature, °F	250

(1) Vertical compressive strength is measured at 10 percent deformation or at yield, whichever occurs first.

www.dowbuildingsolutions.com
www.thermaxbydow.com

Technical Information
1-866-583-BLUE (2583)
Sales Information
1-800-232-2436

IN THE U.S.
THE DOW CHEMICAL COMPANY
200 Larkin
Midland, MI 48674

NOTICE: No freedom from any patent owned by Dow or others is to be inferred. Because use conditions and applicable laws may differ from one location to another and may change with time, Customer is responsible for determining whether products and the information in this document are appropriate for Customer's use and for ensuring that Customer's workplace and disposal practices are in compliance with applicable laws and other government enactments. The product shown in this literature may not be available for sale and/or available in all geographies where Dow is represented. The claims made may not have been approved for use in all countries or regions. Dow assumes no obligation or liability for the information in this document. References to "Dow" or the "Company" mean the Dow legal entity selling the products to Customer unless otherwise expressly noted. NO EXPRESS WARRANTIES ARE GIVEN EXCEPT FOR ANY APPLICABLE WRITTEN WARRANTIES SPECIFICALLY PROVIDED BY DOW. ALL IMPLIED WARRANTIES INCLUDING THOSE OF MERCHANTABILITY AND FITNESS FOR A PARTICULAR PURPOSE ARE EXPRESSLY EXCLUDED.

CAUTION: This product is combustible and shall only be used as specified by the local building code with respect to flame spread classification and to the use of a suitable thermal barrier. For more information, consult MSDS, call Dow at 1-866-583-BLUE (2583) or contact your local building inspector. In an emergency, call 1-989-636-4400.

WARNING: Rigid foam insulation does not constitute a working walkable surface or qualify as a fall protection product.

Building and/or construction practices unrelated to building materials could greatly affect moisture and the potential for mold formation. No material supplier including Dow can give assurance that mold will not develop in any specific system.

Printed in U.S.A.

®™Trademark of The Dow Chemical Company ("Dow") or an affiliated company of Dow

Form No. 179-04015X-0512MCK
MCKAY214034

The miracles of science™

DuPont™ Caulk

DuPont™ Caulk Home
Pick Your Sealing Project
Kitchen & Bath
Windows, Doors & Siding Sealant
DuPont™ Paintable Premier Silicone
DuPont™ Window & Door Premier Silicone
DuPont™ Window & Door Choice Silicone
DuPont™ Window, Doors, & Siding Silicone w/ Kevlar®
DuPont™ Painters Caulk w/ Speed Dry™ Technology
DuPont™ AIRTITE® Siliconized Acrylic Caulk
Aluminum & Metal
Driveway & Roofing
Concrete & Masonry
Paintable Caulk
About our Products
Using Our Products
Where to Buy
Customer Care
Contact Us
Print This Page

DuPont™ AIRTITE® Siliconized Acrylic Caulk with Weather-Tight Seal technology

DuPont™ AIRTITE® Siliconized Acrylic Caulk with Weather-Tight Seal technology is ideal for sealing gaps around windows, doors, trim, and a variety of other interior and exterior surfaces. With this new technology, DuPont™ AIRTITE® Siliconized Acrylic Caulk forms a weather-tight seal that has been tested by accepted standards for adhesion, low temperature flexibility, extension/recovery, and weathering. Reduce air leaks in your home and increase energy efficiency by caulking or sealing with an acrylic sealant.

DuPont™ AIRTITE® Siliconized Acrylic Caulk can help eliminate air infiltration into a home when used around doors and windows. The Department of Energy - ENERGY STAR® Home Sealing guidelines and the NAHB Green Home Building Guidelines recommend the use of caulk to increase the energy efficiency of a home. Using DuPont™ Caulk may also help contribute towards U.S. Green Building Council's LEED® (Leadership in Energy and Environmental Design) points.

DuPont™ AIRTITE® Siliconized Acrylic Caulk with Weather-Tight Seal technology comes in both a convenient squeeze tube and cartridge, which requires a caulk gun for application.

For interior and exterior acrylic sealant, choose the name that has brought you quality products for more than 200 years - DuPont.

Product Features:
- Exceeds ASTM C-834, Grade -18° C
- 40-year guarantee
- Interior / Exterior
- Paintable
- Water-resistant seal
- Airtight seal
- VOC less than 1.5%
- Cured bead is mildew resistant

Available colors and packaging:
- 10.1 oz. cartridges & 5.5 oz. squeeze tubes available in: White and Clear

Is Your Home Energy Efficient?

Air-seal your home with DuPont™ AIRTITE® Siliconized Acrylic Caulk to increase energy efficiency and comfort. Download the ENERGY STAR® Do-It-Yourself Guide to get started.

» Download Now

DuPont™ AIRTITE® Siliconized Acrylic Caulk

DuPont™ AIRTITE® Siliconized Acrylic Caulk with Weather-Tight Seal technology is now available at Lowe's Home Improvement Stores nationwide and online.

LOWE'S
Let's Build Something Together

» Buy Now!

DuPont™ Residential Sealant

Testing Standards:
- ASTM C-834, Type OP, Grade -18°C, White
- ASTM C-834, Type C, Grade 0°C, Clear

Adheres to:
- Concrete
- Wood
- Metal
- Marble
- Glass
- Porcelain
- Ceramic tile
- Masonry

FAQ | Site Map | Legal Notices & Terms of Use | PRIVACY

Copyright © 2012 DuPont or its affiliates. All rights reserved. The DuPont Oval Logo, DuPont™, The miracles of science™ and all products denoted with ® or ™ are registered trademarks or trademarks of E. I. du Pont de Nemours and Company or its affiliates.

The miracles of science

DuPont™ Caulk

DuPont™ Caulk Home
Pick Your Sealing Project
Kitchen & Bath
Windows, Doors & Siding Sealant
DuPont™ Paintable Premier Silicone
DuPont™ Window & Door Premier Silicone
DuPont™ Window & Door Choice Silicone
DuPont™ Window, Doors, & Siding Silicone w/ Kevlar®
DuPont™ Painters Caulk w/ Speed Dry™ Technology
DuPont™ AIRTITE® Siliconized Acrylic Caulk
Aluminum & Metal
Driveway & Roofing
Concrete & Masonry
Paintable Caulk
About our Products
Using Our Products
Where to Buy
Customer Care

Contact Us
Print This Page

DuPont™ Window & Door Premier Silicone

This 100% silicone rubber sealant is ideal for sealing cracks and gaps around windows, doors, plumbing openings, vents and ducts. While providing a watertight, flexible seal that is resistant to mold, mildew, sunlight, rain, snow and extreme temperatures (-60°F to 400°F), it can be exposed to water two hours after application. Once cured, the bead will not crack, crumble or shrink.

DuPont™ Window & Door Premier Silicone can also help eliminate air infiltration into a home. In fact, the Department of Energy - ENERGY STAR® Home Sealing guidelines and the NAHB Green Home Building Guidelines recommend the use of caulk to increase energy efficiency.

Need DuPont™ Window & Door Premier Silicone Installation Help?

Get the answers to all of your caulking installation questions.

» More

Product features:

- Water ready in two hours
- Waterproof and crack proof
- Provides a weatherproof seal
- Lifetime durability
- Low VOC
- Low odor
- Mineral spirits cleanup

Available colors and packaging:

- 9.8 oz cartridge available in White, Clear, Almond, Brown, Bronze, Black, Cedar Wood and Light Gray
- 2.8 oz squeeze tube available in White and Clear

Testing Standards:

- Meets ASTM Specification C-920, Type-S, NS Class 25, use NT, M, G, A & O test requirements. Fed. Spec. TT-S-00230C and TT-S-001543A

Effective for a variety of applications:

- Windows
- Doors
- Siding
- Trim
- Plumbing openings
- Vents
- Ducts
- Molding

Excellent adhesion to most substrates:

- Wood
- Metal

- Vinyl siding
- Drywall/plaster
- Glass
- Painted surfaces

FAQ | Site Map | Legal Notices & Terms of Use | PRIVACY

Copyright © 2012 DuPont or its affiliates. All rights reserved. The DuPont Oval Logo, DuPont™, The miracles of science™ and all products denoted with ® or ™ are registered trademarks or trademarks of E. I. du Pont de Nemours and Company or its affiliates.

VISCO
WEATHER SEAL PRODUCTS

door WEATHERSTRIPPING

DS080 - Light Duty (Rounded) Door Weatherstripping

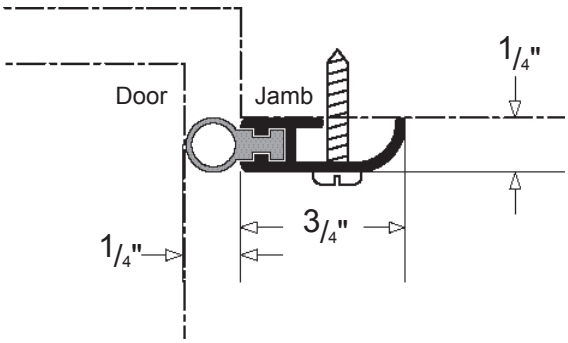

Construction: PVC rigid vinyl. Mitered corners ensure a secure fit with slotted mounting holes for easy adjustment.

Insert: 1/4" flexible, bubble type neoprene or vinyl insert.

Finish: Brown or white finish.

Set: 1-3' piece and 2-7' pieces. Custom lengths also available.

DS080-AL-V

MODEL	DESCRIPTION	FINISH		INSERT	
DS075	Door Weatherstripping	BR	Brown	V	Vinyl
		WH	White		

DS050 - Door Weatherstripping

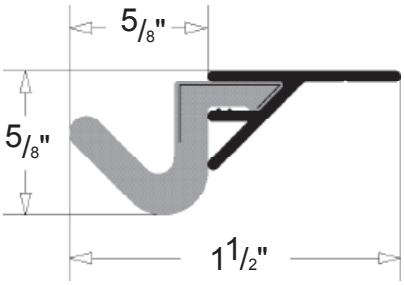

Construction Q-Lon: Extruded aluminum. Mitered corners ensure a secure fit with slotted mounting holes for easy adjustment.

Insert: Soft cell foam insert. Foam has thermoplastic cover and will not deteriorate.

Finish: Aluminum, brown or white finish.

Set: 1-3' piece and 2-7' pieces. Custom lengths also available.

DS050-AL

MODEL	DESCRIPTION	FINISH	
DS100	Door Weatherstripping	AL	Aluminum
		BR	Brown
		WH	White

**Q-Lon is replaceable without removing holder from the door.*
**Approved for Sound Abatement Program.*

VISCO
WEATHER SEAL PRODUCTS

door **WEATHERSTRIPPING**

DXL-1000 – Door Weatherstripping

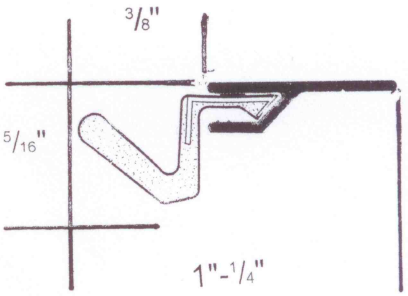

Construction: Extruded aluminum. Mitered corners ensure a secure fit with slotted mounting holes for easy adjustment.

Insert: Q-Lon soft cell foam insert. Foam has thermoplastic cover and will not deteriorate.

Finish: Aluminum, brown or white finish.

Set: 1-3' piece and 2-7' pieces. Custom lengths also available.

DXL-1000

MODEL	DESCRIPTION	FINISH	
	Door Weatherstripping	AL	Aluminum
		BR	Brown
		WH	White

**Q-Lon is replaceable without removing holder from the door.*
**Approved for Sound Abatement Program.*

Phone: (401) 831-1665 Toll Free: 1-800-628-9680 Fax: (401) 751-2720 Web: www.viscoproduct.com
VISCO Weather Seal Products 7 Victory Avenue, Johnston, RI 02919

VISCO
WEATHER SEAL PRODUCTS

door WEATHERSTRIPPING

DS060 - Door Weatherstripping

Construction: Pine wood strip or PVC, available as 1 3/8" or 3/4" Quarter Round, or Bullnose or narrow.

Insert: Q-Lon soft cell foam insert. Foam has thermoplastic cover and will not deteriorate.

Finish: Brown or White foam. Wood is primed, PVC is white.

Lengths: 1-3' piece and 2-7' pieces. Specify wood or PVC.

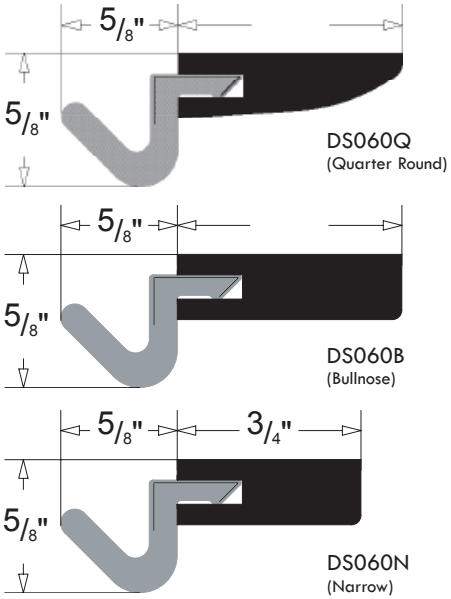

DS060-AL-B

MODEL	DESCRIPTION	FINISH		INSERT	
DS060	Door Weatherstripping	AL	Aluminum	B	Bullnose
		BR	Brown	Q	Quarter Round 1 3/8
				N	Narrow 3/4

OBS-296 - Offset Head Nylon Brush Door Gasket

Construction: Extruded aluminum.

Insert: 5/8" or 1" nylon brush strip.

Finish: Aluminum or Brown anodized finish.

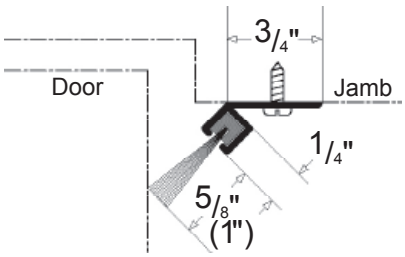

OBS-296-58-AL

MODEL	DESCRIPTION	BRUSH SIZE		FINISH	
OBS-296	Brush Weatherstripping	58	5/8 inch	AL	Aluminum
		1	1 inch	BR	Brown

BS88 - Pressure Sensitive Door Gasketing

Finishes: Dark Bronze, White.

Lengths: 17', 21', 25', and 500' coils.

Self-adhesive: For application between 50°F and 100°F with end use temperature range from -30°F to 150°F

- Begins compressing at 1/4" and can be compressed to seal 1/16" toleranced openings; will not lose its form.
- Self-extinguishing and non-toxic.
- Impervious to dust and mildew, will not deteriorate under normal exposure. Unaffected by sunlight, ozone, and ultraviolet rays.

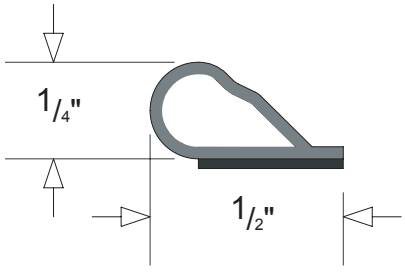

BS88-BR-25

MODEL	DESCRIPTION	FINISH		LENGTH	
BS88	Self-Adhesive	BR	Brown	17	17ft. coil
	Door Weatherstripping	WH	White	21	21ft. coil
				25	25ft. coil
				500	500ft. coil (2x102ft.)

**Approved for Sound Abatement Program.*

Phone: (401) 831-1665 **Toll Free:** 1-800-628-9680 **Fax:** (401) 751-2720 **Web:** www.viscoproduct.com **e-mail:** info@visco.com

VISCO Weather Seal Products 7 Victory Avenue, Johnston, RI 02919

VISCO
WEATHER SEAL PRODUCTS

door BOTTOMS & SWEEPS

BS-196 - Brush Door Sweep

Construction: Extruded Aluminum
Insert: 5/8" or 1" Nylon Brush Strip
Finish: Aluminum or Brown Anodized Finish
Lengths: Sold by the linear foot

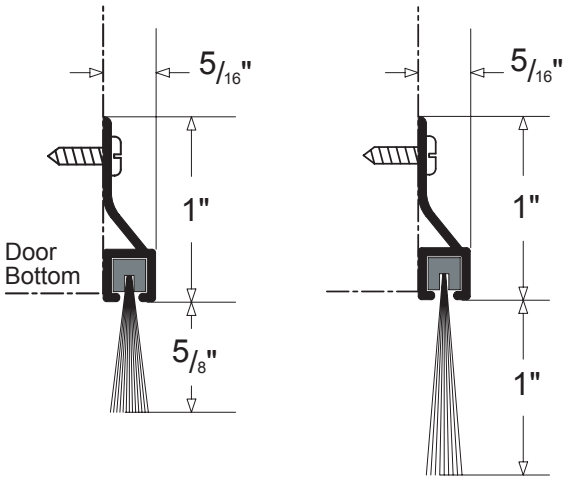

BS196-58-AL

MODEL	DESCRIPTION	BRUSH SIZE		FINISH	
BS-196	Brush Door Sweep	58	5/8 inch	AL	Aluminum
		1	1 inch	BR	Brown

SS045 - Standard Door Sweep

Construction: Extruded Aluminum
Insert: 5/8" Vinyl Insert
Finish: Aluminum, Brown or White Finish
Lengths: 36", 42", or 48", or by the linear foot

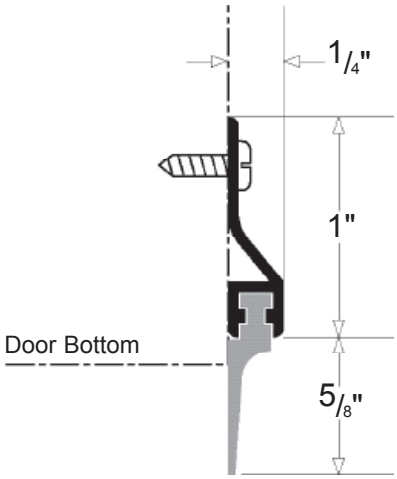

SS045-AL-36

MODEL	DESCRIPTION	FINISH		LENGTH	
SS045	Door Sweep	AL	Aluminum	36	36 inches
		BR	Brown	42	42 inches
		WH	White	48	48 inches
				LF	Specify Length

HS051 - Heavy Duty Door Sweep

Construction: Extruded Aluminum
Insert: 3/4" Neoprene Insert
Finish: Aluminum or Brown Finish
Lengths: 36", 42", or 48", or by the linear foot

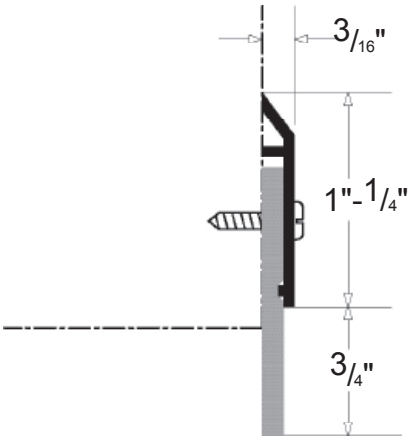

**Approved for Sound Abatement Program.*

HS051-AL-36

MODEL	DESCRIPTION	FINISH		LENGTH	
HS051	Door Sweep	AL	Aluminum	36	36 inches
		BR	Brown	42	42 inches
				48	48 inches
				LF	Specify Length

VISCO
WEATHER SEAL PRODUCTS

door ASTRAGALS

BS596 - Brush Astragal

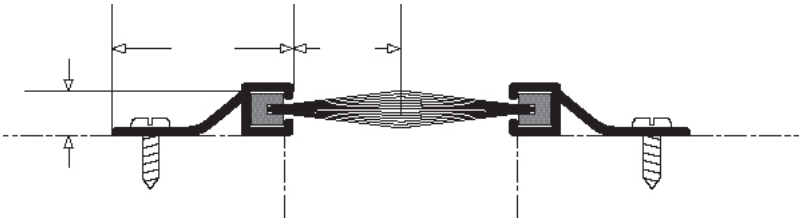

Construction: Extruded aluminum
Insert: 5/8" or 1" nylon brush.
Finish: Aluminum or Bronze
Lengths: 2-7ft. or 8ft. pieces.
Custom lengths also available.

BS596-AL-58-7

MODEL	DESCRIPTION	FINISH		BRUSH SIZE		LENGTH	
BS596	Astragal Nylon Brush	AL	Aluminum	58	5/8 inch	7	2-7ft. pieces
		BR	Bronze	1	1 inch	8	2-8ft. pieces

SA515 - Security Astragal

Security Astragal, Cam activated. Installed on push side of door. Each door may be active without requiring a coordinator.

Construction: Aluminum construction, piano type hinge, and stainless steel spring.
Insert: Vinyl.
Action: Cam activated.
Finish: Aluminum or Bronze
Length: Available in 96" length, may be cut from either end to fit around panic hardware.

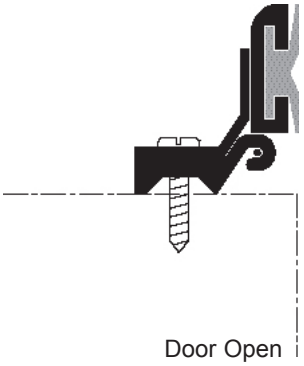

Door Open

SA515-AL

MODEL	DESCRIPTION	FINISH	
SA515	Security Astragal	AL	Aluminum
		BR	Bronze

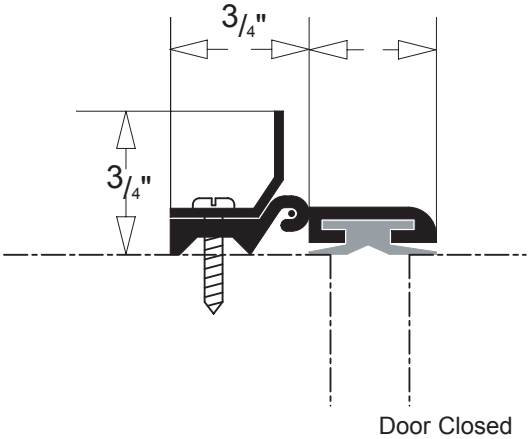

Door Closed

VISCO
WEATHER SEAL PRODUCTS

door ASTRAGALS

FS325 - Wool Pile Brush Astragal With Fin

Construction: Extruded Aluminum
Insert: .500" or .880" Wool Pile Brush.
Finish: Aluminum, Bronze or White
Standard Lengths: 7ft. or 8ft. pieces, 2 piece set.
Custom lengths also available.

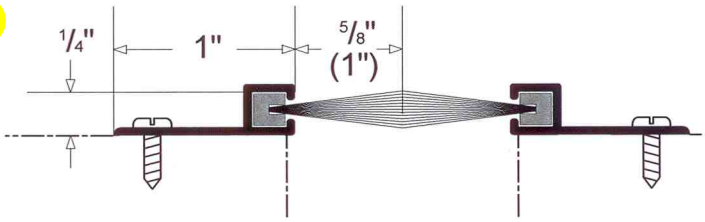

FS-325-AL-58-7

MODEL	DESCRIPTION		FINISH		BRUSH SIZE		LENGTH
FS325	Wood Pile Brush	AL	Aluminum	58	.500 inch	7	2-7ft. pieces
		BR	Bronze	1	.880 inch	8	2-8ft. pieces
		WH	White				

door BOTTOMS & SWEEPS

FS300 - Wool Pile Brush Sweep With Fin

Construction: Extruded Aluminum
Insert: .500" or .880" Wool Pile Brush.
Finish: Aluminum, Bronze or White
Standard Lengths: 36, 42, 48 inches.
Custom lengths also available.

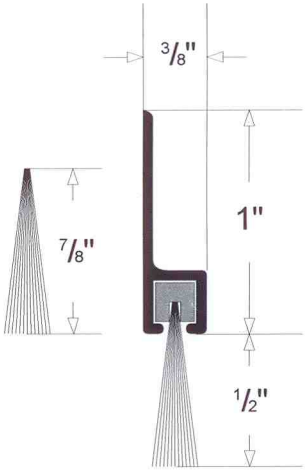

FS-300-AL-58-36

MODEL	DESCRIPTION		FINISH		BRUSH SIZE		LENGTH
FS300	Wood Pile Sweep	AL	Aluminum	58	.500 inch	36	36 inches
		BR	Bronze	1	.880 inch	42	42 inches
		WH	White			48	48 inches
						LF	Specify Length

door THRESHOLDS

TB-550

- 5" Flat Threshold (Tile Back)
- 1/2" Rise
- Available in lengths up to 12ft.

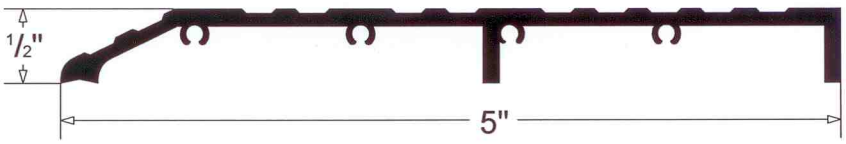

Phone: (401) 831-1665 Toll Free: 1-800-628-9680 Fax: (401) 751-2720 Web: www.viscoproducts.com e-mail: info@visco.com
VISCO Weather Seal Products 7 Victory Avenue, Johnston, RI 02919

VISCO
WEATHER SEAL PRODUCTS

door **BOTTOMS & SWEEPS**

TS100 Door Triple Sweep

Construction: Extruded Aluminum
Insert: 3/4" Vinyl Insert
Finish: Aluminum or Brown Finish
Lengths: 36", 42", or 48", or by the linear foot

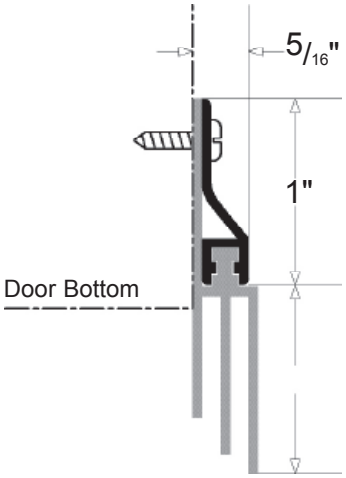

TS100-AL-36

MODEL	DESCRIPTION	FINISH		LENGTH	
TS100	Door Sweep	AL	Aluminum	36	36 Inches
		BR	Brown	42	42 Inches
				48	48 Inches
				72	72 Inches
				LF	Specify Length

TS150 Door Triple Sweep

Construction: Extruded Aluminum
Insert: 1" Vinyl Insert
Finish: Aluminum or Brown Finish
Lengths: 36", 42", or 48", or by the linear foot

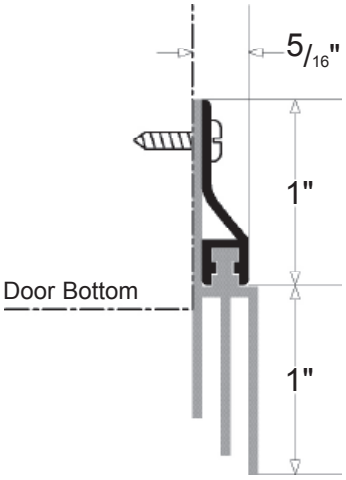

TS150-AL-36

MODEL	DESCRIPTION	FINISH		LENGTH	
TS150	Door Sweep	AL	Aluminum	36	36 Inches
		BR	Brown	42	42 Inches
				48	48 Inches
				72	72 Inches
				LF	Specify Length

DB215 - Automatic Door Bottom

Construction: Aluminum Construction, Piano Type Hinge and Stainless Steel Spring
Insert: Vinyl
Action: Cam Activated
Finish: Satin Aluminum
Lengths: 36" or 48"

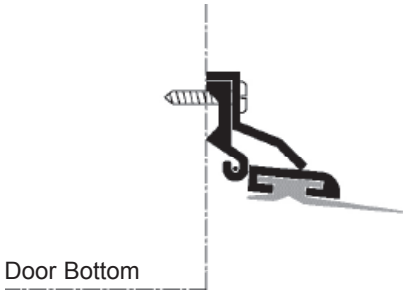

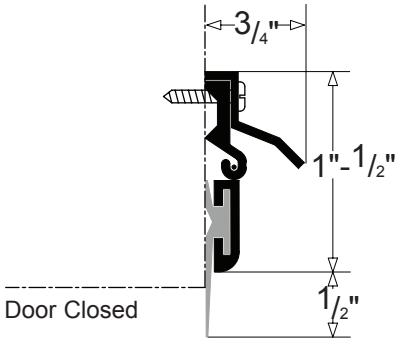

DB215-36

MODEL	DESCRIPTION	LENGTH	
DB215	Automatic	36	36 Inches
	Door Bottom	48	48 Inches

**Approved for Sound Abatement Program.*

Pocket Q-LON® Weatherseals

QWS-440

Pocket Opening: .125" (3.2mm)
Reach: .280" (7.1mm)

QWS-525

Pocket Opening: .140" (3.5mm)
Reach: .225" (5.7mm)

QWS-530

Pocket Opening: .125" (3.2mm)
Reach: .250" (6.4mm)

QWS-580

Pocket Opening: .125" (3.2mm)
Reach: .345" (8.8mm)

QWS-591

Pocket Opening: .215" (5.5mm)
Reach: .402" (10.2mm)

APTUS Plastic

AP-5210

Pocket Opening: .150" (3.8mm)
Reach: .150" (3.8mm)

AP-5211

Pocket Opening: .150" (3.8mm)
Reach: .340" (8.6mm)

Pocket SKIRTING Textile Weatherseals

SK-510

Pocket Opening: .090" (2.3mm)

SK-519

Pocket Opening: .090" (2.3mm)

SK-527

Pocket Opening: .090" (2.3mm)

SK-560

Pocket Opening: .090" (2.3mm)

APTUS Plastic

KP-45

Pocket Opening: .158" (4.0mm)

Surface Q-LON® Weatherseals

QWS-D

Width: .240" (6.1mm)
Reach: .140" (3.6mm)

QWS 6x6

Width: .235" (6.0mm)
Reach: .235" (6.0mm)

QWS 3/8x1/4

Width: .375" (9.5mm)
Reach: .250" (6.4mm)

QWS 3/8x3/8

Width: .375" (9.5mm)
Reach: .375" (9.5mm)

QWS 1/2x3/8

Width: .500" (12.7mm)
Reach: .375" (9.5mm)

QDS-375 QFS-375

Width: .420" (10.7mm)
Reach: .385" (9.8mm)

QDST 675

Width: .580" (14.7mm)
Reach: .675" (17.1mm)

Q-LON Corner Seals
2 Widths

Width: 1.313" (33.4mm)
Reach: .218" (5.5mm)

Width: 1.688" (42.9mm)
Reach: .218" (5.5mm)

Replacement Door Seal
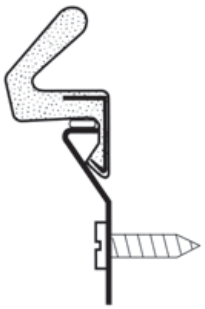

Surface Textile Weatherseals

FIN-SEAL Door Sweep

Tape Back Pile Weatherstripping

Metal Back Pile Weatherstripping

FIN-SEAL Corner Seal

Corner seal profiles not shown to size.

POLY-BOND Corner Seal

Surface POLYFLEX® Plastic Weatherseals

PF-102

PF-114

PF-512

VISCO Weatherseal Products is an authorized dealer of Schlegel Systems, Inc.

ECM 8:
Vending Machine Controls

Figure 8.1: Drink and snack vending machines will be controlled and set back by the VendingMiser® controls to limit unnecessary electrical use.

ECM Overview

Ameresco will install 27 occupancy sensing plug load controllers to reduce the unnecessary operation of Wayne Public School District's (District) vending machines during unoccupied periods. The vending machine controllers will save energy used by the refrigerated drink machines (except perishable) and un-refrigerated snack vending machines during unoccupied hours without compromising product quality. The controllers will use an occupancy sensor to detect when the space is unoccupied and turn the vending machines off during prolonged periods of un-occupancy.

ECM Detail

Existing System

Vending machines are found in almost every building within the District. The Elementary Schools typically have one drink vending machine located in the staff lounge area while middle and high school buildings have vending machines located in the cafeterias, gymnasiums and auditorium areas. The perishable ice cream or milk machines will not receive a Vending Miser® controller. The vending machines are typically stocked with water, juice and sport/energy drinks and are cooled and illuminated year-round regardless of occupancy. The following table documents the quantity of vending machines found at each facility.

Building	Drink Vending	Snack Machines
Randall Carter-Elementary School	1	0
James Fallon-Elementary School	1	0
Lafayette-Elementary School	1	0
Packanack-Elementary School	1	0
Anthony Wayne-Middle School	2	1
Schuyler-Colfax-Middle School	3	0
George Washington-Middle School	2	0
Wayne Hills-High School	4	2
Wayne Valley-High School	4	2
Preakness (Library Community Center)	1	0
Board of Ed. Administration	1	1
Totals	21	6

Table 8.1: Quantities of vending machine to receive new controls

"Page content is subject to Confidentiality Restrictions"

Proposed System

Ameresco will install a VendingMiser™ controller, or equal, on the soft drink and snack machines located throughout the District to save energy during unoccupied periods. This device controls the vending machine operation without compromising its product quality. The controller is external to the vending machine, therefore not requiring vendor maintenance. Major soft drink manufacturers have approved the controller for use on vending machines offering their products.

Figure 8.2: Vending machines will be controlled during the unoccupied periods by the VendingMiser®.

The controller employs infrared sensing technology to interrupt power to a vending machine when the surrounding area is unoccupied. Regardless of occupancy, the controller automatically enables the vending machine to ensure that its product remains cold. The controller is designed so that it will not de-energize the vending machine during a cooling compressor cycle.

As reported by the American Council for an Energy Efficient Economy (ACEEE), the 2.5 million vending machines operating in the U.S. consume nearly $600 million in energy and demand costs. Since the District's buildings are not constantly occupied, the District's refrigerated vending machine consumes more energy than needed.

According to the manufacturer's representative, if switched off, this product's resumes normal operation once its power is restored.

Equipment, Design and Construction Documentation

Equipment will be identified in submittals provided to District for approval prior to procurement. Documents will be submitted to the engineering maintenance department, for their review and comment. Upon approval, these will constitute the construction documents. Upon completion of the construction phase, the documents will be revised as needed to reflect "As-Built" conditions, and submitted in multiple to District for record.

Impact on Facility Operations and Performance

The new vending machine controls will enhance facility operations by reducing electricity usage during unoccupied periods. Students, teachers and administrators will notice no reduction in drink quality as a result of this measure.

"Page content is subject to Confidentiality Restrictions"

Appendix for ECM 8: Vending Machine Controls

I. Energy Savings Calculations

"Page content is subject to Confidentiality Restrictions"

This page is intentionally left blank.

Project Template	
Energy and Demand Savings Summary	
Measure ID:	**8**
Measure Name:	**Vending Machine Controls**
Measure Location:	
Engineers:	

Site Name:		**Carter ES**	**Fallon ES**	**Lafayette ES**	**Packanack ES**	**Anthony Wayne MS**	**Colfax MS**	**Washington MS**	**Wayne Hills HS**	**Wayne Valley HS**	**Preakness**	**Admin**	**Summary**
Item	Units	Savings	Savings	Savings	Savings	Savings	Savings	Savings	Savings	Savings	Savings	Savings	
Electricity													
Energy On-Peak	kWh	2,533	2,727	2,611	2,504	3,848	6,515	3,596	6,322	7,022	2,507	2,457	42,643
Energy Off-Peak	kWh												
Energy Total	kWh	2,533	2,727	2,611	2,504	3,848	6,515	3,596	6,322	7,022	2,507	2,457	42,643
Demand On-Peak, Monthly	kW												
Demand On-Peak, Annual	kW												
Demand Off-Peak, Monthly	kW												
Demand Off-Peak, Annual	kW												
Fossil Fuel													
Natural Gas (NG)	Therms	-47	-42	-45	-47	-57	-119	-62	-113	-127	-45	-41	-745
Liquid Propane Gas (LPG)	Gallons	0	0	0	0	0	0	0	0	0	0	0	0
Steam	Mlbs	0	0	0	0	0	0	0	0	0	0	0	0
Fuel Oil, #2	Gallons	0	0	0	0	0	0	0	0	0	0	0	0
Fuel Oil, #4	Gallons	0	0	0	0	0	0	0	0	0	0	0	0
Fuel Oil, #6	Gallons	0	0	0	0	0	0	0	0	0	0	0	0
Miscellaneous	Misc	0	0	0	0	0	0	0	0	0	0	0	0

Project Template

Vending Machine Controls

Building	Quantity of Snack Machines	Quantity of Refrigerated Drink Machines	Total Connected Demand	Existing Hours of Operation	Existing Electric Consumption	Proposed Hours of Operation	Proposed Electric Consumption	Operating Months per Year	Annual Electric Savings
[A]	[B]	[C]	[D]	[E]	[F]	[G]	[H]	[I]	[J]
Randall Carter-Elementary School	0	1	0.43	8,760	3,741	2,927	1,250	12	2,491
Theunis Dey-Elementary School	0	0	0.00	8,760	0	2,927	0	12	0
James Fallon-Elementary School	0	1	0.43	8,760	3,741	2,927	1,250	12	2,491
John F. Kennedy-Elementary School	0	0	0.00	8,760	0	2,927	0	12	0
Lafayette-Elementary School	0	1	0.43	8,760	3,741	3,089	1,319	12	2,421
Packanack-Elementary School	0	1	0.43	8,760	3,741	2,927	1,250	12	2,491
Pines Lake-Elementary School	0	0	0.00	8,760	0	2,927	0	12	0
Ryerson-Elementary School	0	0	0.00	8,760	0	3,171	0	12	0
Albert Payson Terhune-Elementary School	0	0	0.00	8,760	0	2,927	0	12	0
Anthony Wayne-Middle School	1	2	0.93	8,760	8,182	5,081	4,746	12	3,436
Schuyler-Colfax-Middle School	0	3	1.28	8,760	11,222	3,777	4,839	12	6,383
George Washington-Middle School	0	2	0.85	8,760	7,481	4,647	3,968	12	3,513
Wayne Hills-High School	2	4	1.87	8,760	16,364	5,523	10,317	12	6,047
Wayne Valley-High School	2	4	1.87	8,760	16,364	5,045	9,424	12	6,940
Preakness (Library Community Center)	0	1	0.43	8,760	3,741	3,068	1,310	12	2,431
Board of Ed Administration	1	1	0.51	8,760	4,441	4,458	2,260	12	2,181
	6	21	9.45		82,756		41,931		40,824

Item	Value	Units	cell ref	Remarks
Existing Annual Hours of Operation per Machine	8,760	Hrs.	**[C62]**	Vending Machines are constantly plugged in.
Time Between Auto Repower	2.00	Hrs.	**[C63]**	based on Bayview Tech data
Duration of Auto Repower	0.40	Hrs.	**[C64]**	based on Bayview Tech data
Non-perishable Snack Machine Average Power Draw	80	watts	**[C65]**	Average power draw
Refrigerated Drink Machine Average Power Draw	427	watts	**[C66]**	Average power draw

Cell Ref.	Comment
A	Facility
B	Number of Snack Machines
C	Number of Drink Machines
D	Total connected electric demand per building
E	= [C62]
F	= [col D] x [col E]
G	Building Occ. hours + ([C62] - Building Occ. hours) ÷ ([C63] + [C64]) x [C64]
H	= [col D] x [col G]
I	Months per year the machine is powered on
J	= [col F] x [col H]

Project Template
Vending Machine Controls
Interactive Savings Calculation

	Savings		Heating Penalty				Cooling Benefit			
A	B	C	D	E	F	G	H	I	J	K
Facility	Annual kW	Annual kWh	Heat Gain to Space	Heating Months	Heating System Efficiency	Heating Penalty MMBtu	Total Space Cooled	Cooling Months	Cooling System COP	Cooling Benefit MMBtu
Randall Carter-Elementary School		2,491	100.0%	5.0	76.0%	(4.7)	12.0%	4.0	2.34	0.1
Theunis Dey-Elementary School		0	100.0%	5.0	78.0%	0.0	31.0%	4.0	3.52	0.0
James Fallon-Elementary School		2,491	100.0%	5.0	85.0%	(4.2)	75.0%	4.0	2.64	0.8
John F. Kennedy-Elementary School		0	100.0%	5.0	76.0%	0.0	33.0%	4.0	3.08	0.0
Lafayette-Elementary School		2,421	100.0%	5.0	76.0%	(4.5)	62.0%	4.0	2.64	0.6
Packanack-Elementary School		2,491	100.0%	5.0	76.0%	(4.7)	5.0%	4.0	3.22	0.0
Pines Lake-Elementary School		0	100.0%	5.0	76.0%	0.0	60.0%	4.0	2.64	0.0
Ryerson-Elementary School		0	100.0%	5.0	76.0%	0.0	24.0%	4.0	3.52	0.0
Albert Payson Terhune-Elementary School		0	100.0%	5.0	76.0%	0.0	18.0%	4.0	3.37	0.0
Anthony Wayne-Middle School		3,436	100.0%	5.0	85.3%	(5.7)	100.0%	4.0	2.78	1.4
Schuyler-Colfax-Middle School		6,383	100.0%	5.0	76.0%	(11.9)	20.0%	4.0	3.22	0.5
George Washington-Middle School		3,513	100.0%	5.0	80.0%	(6.2)	23.0%	4.0	3.22	0.3
Wayne Hills-High School		6,047	100.0%	5.0	76.0%	(11.3)	50.0%	4.0	3.66	0.9
Wayne Valley-High School		6,940	100.0%	5.0	78.0%	(12.7)	13.0%	4.0	3.66	0.3
Preakness (Library Community Center)		2,431	100.0%	5.0	76.0%	(4.5)	25.0%	4.0	2.64	0.3
Board of Ed Administration		2,181	100.0%	5.0	76.0%	(4.1)	100.0%	4.0	2.64	0.9
Totals	**0.0**	**40,824**				**(74.5)**				**6.2**

Notes:	
A	Applicable building included in comprehensive energy audit
B	Measure demand savings {kW} associated with Measure retrofit measures
C	Measure energy savings {kWh} associated with Measure retrofit measures
D	Estimated percentage of Measure energy transmitted to conditioned space
E	Estimated length of heating season
F	Estimated heating system efficiency, interacted with other measures
G	Resulting heating penalty due to Measure upgrades = [col C] x [col D] x 3,413 x ([col E] / 12) / [col F] / 1,000,000
H	Estimated percentage of space cooled
I	Estimated Length of cooling season
J	Estimated cooling system efficiency, interacted with other measures
K	Resulting cooling benefit due to Measure upgrades = [col C] x [col D] x 3,413 x ([col I] / 12) / [col J] / 1,000,000

Appendix for ECM 8:
Vending Machine Controls

II. Manufacturer Specification Sheets

"Page content is subject to Confidentiality Restrictions"

This page is intentionally left blank.

VendingMiser®

ENERGY MANAGEMENT SYSTEM
For Refrigerated Vending Machines

VendingMiser® puts you on a cost-effective course for energy savings and conservation.

VendingMiser cuts energy costs down to size

VendingMiser incorporates innovative energy-saving technology into a small, plug-and-play powerhouse that installs in minutes either on the wall or on the existing vending machine. It's that easy.

Power play

Compatible with all types of cold drink vending machines, the VendingMiser uses a Passive Infrared Sensor (PIR) to power down the machine when the area surrounding it is vacant. It monitors the room's temperature and automatically re-powers the cooling system at one- to three-hour intervals, independent of sales, to ensure that the product stays cold.

This Miser runs the bank

Each VendingMiser has a built-in Sensor Repeater capability allowing for a bank, of up to four machines, to be controlled by one PIR sensor. This will omit the need for three PIR sensors and will decrease your hardware expense.

Refresher course

VendingMiser's microcontroller will never power down the machine while the compressor is running, eliminating compressor short-cycling. In addition, when the machine is powered up, the cooling cycle is allowed to finish before again powering down. This reduces the wear and tear on your machines, extending the lifespan. The VendingMiser has been tested and accepted for use by major bottlers.

VendingMiser reduces energy consumption an average of 46%—typically $150 per machine.

VendingMiser offers...

- A quick, inexpensive solution to energy savings and conservation
- Longer machine lifespan
- Early return on investment
- Environmental benefits

VendingMiser can also control other cooled product vending machines, such as refrigerated candy machines.

VendingMiser Technical Specifications

Electrical Specifications
Input Voltage: 115 Volts
Input Frequency: 50/60 Hz
Maximum Load: 12 Amps (Steady-State)
Power Consumption: Less than 1 Watt (Standby)

Environmental Specifications
Operating Temp: -15°C to 75°C
Storage Temp: -40°C to 85°C
Relative Humidity: 95% Maximum (Non-Condensing)

Compatibility
Vending Machines: Any machine, except those containing perishable goods such as dairy products

Inactivity Timeouts
Occupancy Timeout: 15 minutes
Auto Re-power: One to three hours, dynamically adjusted, based on ambient temperature

Dimensions
Size: 4.5"W x 1.75"H x 3.25"D
Weight: 2.2 lbs. (includes power cable)

Regulatory Approvals
Safety: UL/C-UL Listed
Information Technology Equipment (ITE) 9T79

Other energy-saving products offered by USA Technologies include VM2IQ™, CoolerMiser™, SnackMiser™ and PlugMiser™.

GSA Schedule
Contract GS-35F-0031R

USA TECHNOLOGIES

USA Technologies Eastern Region Sales Office: 800.633.0340 Western Region Sales Office: 800.770.8539 www.usatech.com

Frequently Asked Questions

Will VendingMiser® keep my drinks cold?
Absolutely - VendingMiser® has been tested and accepted for use by both major bottlers.

Is the VendingMiser® easy to install?
Yes! VendingMiser® is a simple external plug-and-play product. The VendingMiser® can be installed on the wall with simple hand tools or it can be attached to the vending machine without tools using the new Easy-Install System. The Easy-Install System allows quick installation in 5 minutes.

Is VendingMiser® safe for all machines?
Yes! VendingMiser® is compatible with all types of cold drink vending machines. In fact, by reducing run time of the machines, VendingMiser® reduces maintenance costs.

Has VendingMiser® been field tested?
Tens of thousands of VendingMisers® are operational in the field. Typical energy savings have been independently documented to be at an average of 46%. Measurement and verification test results as well as testimonials are available on the website.

Are there any locations not appropriate for VendingMiser®?
VendingMiser's® savings are generated as a result of location vacancy. Therefore, a machine in a location that is occupied 24-hours, 7 days a week will likely generate little savings. The VM2IQ™ is more appropriate for this type of location and will typically save up to 35% on energy use.

Technical Specifications

ELECTRICAL SPECIFICATIONS

Input Voltage:	115 Volts (230 Volts available)
Input Frequency:	50/60 Hz
Maximum Load:	12 Amps (Steady-State)
Power Consumption:	Less than 1 Watt (Standby)

ENVIRONMENTAL SPECIFICATIONS

Operating Temp:	-15°C to 75°C
Storage Temp:	-40°C to 85°C
Relative Humidity:	95% Maximum (Non-Condensing)

COMPATIBILITY

Vending Machines:	Any machine, except those containing perishable goods such as dairy products.

INACTIVITY TIMEOUTS

Occupancy Timeout:	15 minutes
Auto Repower:	One to three hours, dynamically adjusted, based on ambient temperature

DIMENSIONS

Size:	4.5"W x 1.75"H x 3.25"D
Weight:	2.2 lb. (incl. power cable)

REGULATORY APPROVALS

Safety:	UL/C-UL Listed Information Technology Equipment (ITE) 9T79

UL LISTED c UL LISTED

Typical Saving Generated with VendingMiser®

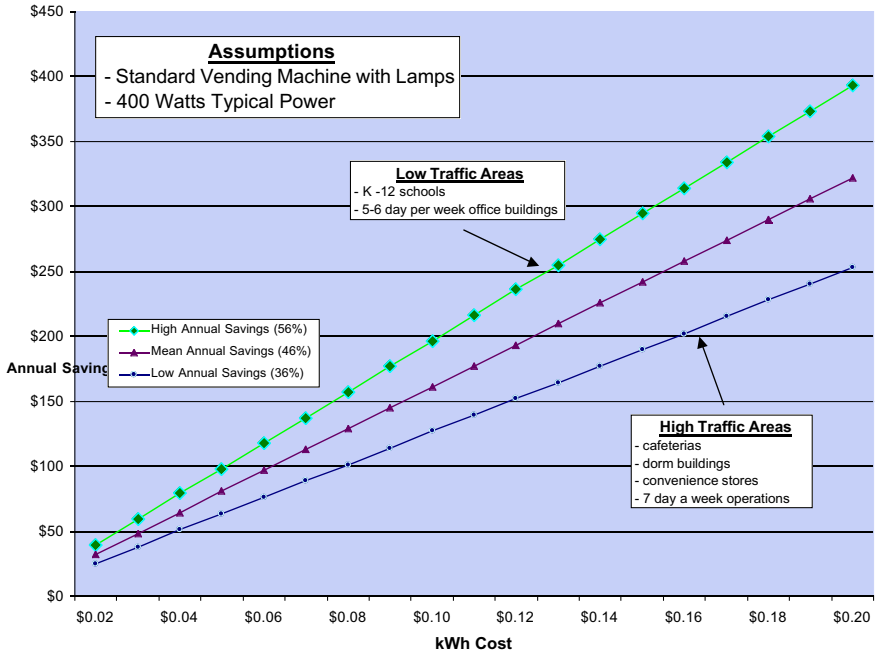

VendingMiser® Products

VM150	VendingMiser® with PIR Sensor
VM151	VendingMiser® only
VM160	Weatherproof VendingMiser® with PIR Sensor
VM161	Weatherproof VendingMiser® only
VM170	Easy-Install VendingMiser® with PIR Sensor
VM171	Easy-Install VendingMiser® only
VM180	Weatherproof Easy-Install VendingMiser w/PIR sensor
VM181	Weatherproof Easy-Install VendingMiser only

SnackMiser™

ENERGY MANAGEMENT SYSTEM
For Snack Vending Machines

The power behind the profits…

SnackMiser™ puts the power of savings into your environment.

With SnackMiser, your current snack venders can achieve maximum energy savings resulting in a reduction in both operating costs and greenhouse gas emissions. Compatible with non-refrigerated snack vending machines, SnackMiser incorporates innovative, energy-saving technology into a small, plug-and-play unit that installs in minutes.

A Practical approach to power

SnackMiser uses a Passive Infrared Sensor (PIR) to determine if there is anyone within 25 feet of the machine. It waits for 15 minutes of vacancy, then powers down the machine. If a customer approaches the machine while powered down, SnackMiser will sense the presence and power up immediately. In addition to reducing energy costs, this practical power play lengthens the expected lifetime of your machine and reduces its exposure to power line spikes.

On average, SnackMiser reduces energy consumption annually per machine by $50 and CO2 emissions by 470 lbs. and 770 grams of NOx, based on occupancy and the Energy Information Administration's national average of greenhouse gas emissions and electricity generation.

This Miser runs the bank

For a bank of machines, SnackMiser can use its embedded Sensor Repeater, which allows it to be controlled from the PIR sensor of any other Miser in the bank. SnackMiser can stand alone or be an ideal partner for VendingMiser®.

SnackMiser offers…

- A quick, inexpensive solution to energy savings and conservation
- Longer machine lifespan
- Environmental benefits
- Early return on investment

SnackMiser Technical Specifications

Electrical Specifications
Input Voltage: 115 Volts
Input Frequency: 50/60 Hz
Maximum Load: 1050 Watts (Steady-State)
Power Consumption: Less than 1 Watt (Standby)

Environmental Specifications
Operating Temp: 0°C to 50°C
Storage Temp: -20°C to 60°C
Relative Humidity: 95% Maximum (Non-Condensing)

Compatibility
Snack Vending Machines: Any type, as long as SnackMiser's maximum power rating is not exceeded

Inactivity Timeouts
Occupancy Timeout: 15 minutes

Dimensions
Size: 4.5"W x 1.75"H x 3.25"D
Weight: 2 lbs. (includes power cable)

Regulatory Approvals
Safety: UL/C-UL Listed
Information Technology Equipment (ITE) 9T79

Other energy-saving products offered by USA Technologies include VendingMiser®, VM2IQ™, CoolerMiser™ and PlugMiser™.

GSA Schedule
Contract GS-35F-0031R

USA TECHNOLOGIES

Frequently Asked Questions

How Does SnackMiser™ Work?
SnackMiser™ uses a PIR sensor to determine if there is anyone within 25 feet of the machine. SnackMiser™ waits for 15 minutes of vacancy and then powers off the snack machine. If a customer approaches the snack machine while powered down, SnackMiser™ will sense the person's presence and power up immediately.

Will SnackMiser™ affect the lifetime of the lights in my machine?
The replacement frequency of the fluorescent lamps will be reduced. While it is true that power cycling fluorescent lamps will shorten their life, the hours that the machine is powered down greatly exceeds this reduction in burn hours. The net effect is that the lamps will need replacement less often.

Are there any locations not appropriate for SnackMiser™?
A machine in a location that is occupied 24-hours, 7 days a week will likely generate little savings.

Is the SnackMiser™ easy to install?
Yes. The SnackMiser™ can be installed on the wall with the supplied bracket holder or it can be attached to the snack machine using the new Easy-Install system. Because many SnackMisers™ are installed with a VendingMiser®, sensor installation might not even be needed.

Technical Specifications

ELECTRICAL SPECIFICATIONS

Input Voltage:	115 Volts (230 Volts available)
Input Frequency:	50/60 Hz
Maximum Load:	1050 Watts (Steady-State)
Power Consumption:	Less than 1 Watt (Standby)

ENVIRONMENTAL SPECIFICATIONS

Operating Temp:	0°C to 50°C
Storage Temp:	-20°C to 60°C
Relative Humidity:	80% Maximum (Non-Condensing)

COMPATIBILITY

Snack Machines:	Any type, as long as SnackMiser's maximum power rating is not exceeded

INACTIVITY TIMEOUTS

Timeout Period:	15 minutes

DIMENSIONS

Size:	4.5"W x 1.75"H x 3.25"D
Weight:	2 lb. (incl. power cable)

REGULATORY APPROVALS

Safety:	UL/C-UL Listed Information Technology Equipment (ITE) 9T79

UL LISTED c UL LISTED

Typical Saving Generated with SnackMiser™

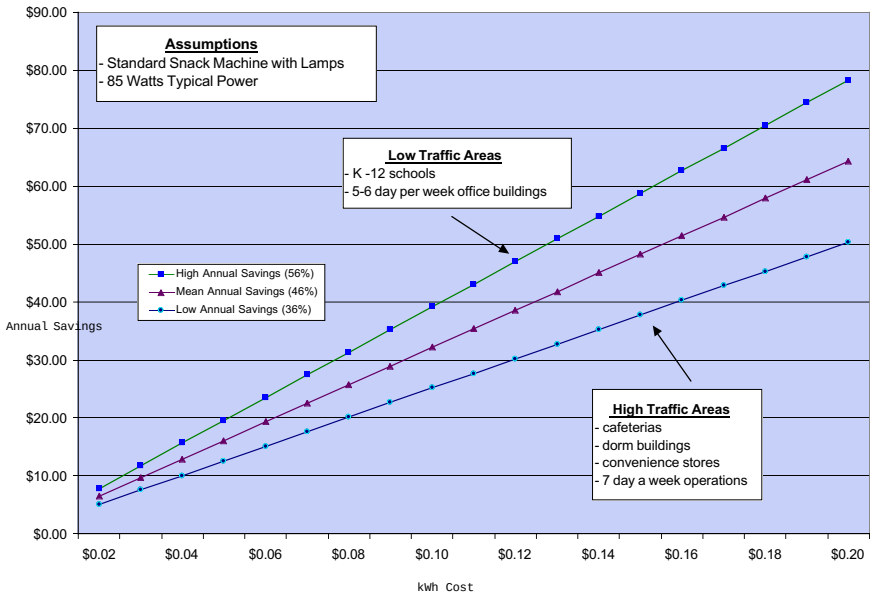

SnackMiser™ Products

SM150	SnackMiser with PIR Sensor
SM151	SnackMiser only
SM170	Easy-Install SnackMiser with PIR Sensor
SM171	Easy-Install SnackMiser only

For more information about the SnackMiser™ by USA Technologies
800-770-8539 • www.usatech.com

© 2004 USA Technologies, SMS001 (01/04)

ECM 9:
Premium Efficiency Motors

ECM Overview

Ameresco proposes to replace (25) existing standard efficiency motors, identified during the on-site survey with premium efficiency equivalents. Motors of at least three horsepower in size that have significant annual usage were considered for replacement. The new motors will contribute to a reduction in electricity use and electrical demand. In addition to reduced energy consumption the new motors will provide a necessary upgrade to HVAC system components.

Figure 9.1: Existing standard efficiency motor at George Washington Middle School.

ECM Detail

Existing System

Motors considered for replacement normally operate a minimum of 1,500 hours annually and are standard efficiency models three 3-horsepower and larger. Where applicable, the motor hours were reduced to account for operation reductions from the new EMS. Existing motors operate at 3-phase and 1,800 rpm, unless otherwise noted. Ameresco identified (3) standard efficiency motors for potential replacement during the audit, as listed in Table 9.1:

Location	Motor Description	Motor HP
Colfax MS	HV-17	15
Washington MS	HV-2	3
Washington MS	HV-5	3
Wayne Hills HS	RTU-3	5
Wayne Hills HS	RTU-4	5
Wayne Hills HS	AHU-1	3
Wayne Hills HS	AHU-6	8
Wayne Hills HS	HV-1	8
Wayne Hills HS	HV-2	5
Wayne Hills HS	HV-3	3
Wayne Hills HS	HV-4	3
Wayne Hills HS	HV-5	5
Wayne Hills HS	RTU-1 new	3
Wayne Hills HS	HV-6	3
Wayne Hills HS	AHU-11	10

"Page content is subject to Confidentiality Restrictions"

Wayne Hills HS	P-14	25
Wayne Hills HS	P-15	25
Wayne Hills HS	P-16	25
Wayne Valley HS	RTU-5	5
Wayne Valley HS	RTU-5	5
Wayne Valley HS	HV-1	5
Wayne Valley HS	HV-9	5
Wayne Valley HS	HV-17	5
Wayne Valley HS	HV-19	5
Admin	RTU-1	3

Table 9.1: Specific Motors to be replaced

Proposed System

Ameresco proposes to replace the identified motors with premium efficiency equivalents. Motor upgrades will help the District by providing more efficient and reliable equipment. Energy savings will be realized through the reduced electric consumption of the new motors.

Ameresco has included (25) standard efficiency motor for replacement under this proposal. The specific scope of work will be as follows:

- *SCOPE OF WORK:*

Provide the necessary mechanical and electrical work to replace standard efficiency motors with new premium efficiency motors. The scope of work is as follows

- Removal and disposal of the old standard efficiency motor.
  - Disconnect motor from existing electrical connections
  - Remove existing motor and dispose of properly
- Installation of the new motors on the existing equipment.
  - New motor will be specified as Baldor premium efficiency motor
  - Existing motor starters and conductors not meeting current code requirements will be excluded from scope. Ameresco will not be responsible to bring existing conductors or starters up to code.
  - Equivalent motors may be substituted if substituted motors meets at a minimum all premium efficiency motor specifications
  - Sheaves will be aligned to EASA standards with a straight edge.
  - Reconnect existing electric service.
  - Perform startup checks to ensure proper rotation and operation
  - Provide one year parts and labor warranty on all components.
  - All motors to be Open Drip Proof

Equipment, Design and Construction Documentation

Equipment will be identified in submittals provided to District for approval prior to procurement. Documents will be submitted to the engineering maintenance department, for their review and comment. Upon approval, these will constitute the construction documents. Upon completion of the construction phase, the documents will be revised as needed to reflect "As-Built" conditions, and submitted in multiple to District for record.

Impact on Facility Operations and Performance

The new motors will enhance facility operations by reducing electricity usage when the new motors are operating.

"Page content is subject to Confidentiality Restrictions"

Appendix for ECM 9: Premium Efficiency Motors

I. Energy Savings Calculations

"Page content is subject to Confidentiality Restrictions"

This page is intentionally left blank.

Project Template	
Energy and Demand Savings Summary	
Measure ID:	**9**
Measure Name:	**Premium Efficiency Motors**
Measure Location:	
Engineers:	

Site Name:		**Carter ES**	**Dey ES**	**Fallon ES**	**Kennedy ES**	**Lafayette ES**	**Packanack ES**	**Pines Lake ES**	**Ryerson ES**	**Terhune ES**	**Anthony Wayne MS**	**Colfax MS**	**Washington MS**	**Wayne Hills HS**	**Wayne Valley HS**	**Admin**	**Summary**
Item	Units	Savings	Savings	Savings	Savings	Savings	Savings	Savings	Savings	Savings	Savings	Savings	Savings	Savings	Savings	Savings	
Electricity																	
Energy On-Peak	kWh	0	0	0	0	0	0	0	0	0	0	2,875	1,084	28,157	4,858	863	37,836
Energy Off-Peak	kWh																
Energy Total	kWh	0	0	0	0	0	0	0	0	0	0	2,875	1,084	28,157	4,858	863	37,836
Demand On-Peak, Monthly	kW	0.0	0.0	0.0	0.0	0.0	0.0	0.0	0.0	0.0	0.0	1.6	0.5	7.3	1.5	0.2	11.1
Demand On-Peak, Annual	kW	0.0	0.0	0.0	0.0	0.0	0.0	0.0	0.0	0.0	0.0	15.6	4.5	60.5	14.9	2.7	98.2
Demand Off-Peak, Monthly	kW																
Demand Off-Peak, Annual	kW																
Fossil Fuel																	
Natural Gas (NG)	Therms																
Liquid Propane Gas (LPG)	Gallons																
Steam	Mlbs																
Fuel Oil, #2	Gallons																
Fuel Oil, #4	Gallons																
Fuel Oil, #6	Gallons																
Miscellaneous	Misc																

Project Template

Premium Efficiency Motors

Energy Efficient Motor Replacement Analysis

MOTOR										Existing		Proposed						Savings		
Facility	Motor ID	Size (HP)	Frame Size	RPM	Type (ODP or TEFC)	Efficiency	Load Fraction	Annual Operation (Mths)	Annual Operation (Hrs)	Demand (kW)	Energy (kWh)	Eff.	Resheave Yes/No	RPM	Speed Adj. Factor	Demand (kW)	Energy (kWh)	Demand (kW)	Annual Demand (kW)	Annual Energy (kWh)
Colfax MS	HV-17	15.00	0	1,760	ODP	78.5%	70.0%	10.0	1,848	10.0	18,442	93.0%	yes	1,767	1.000	8.4	15,567	1.56	15.56	2,875
Washington MS	HV-2	3.00		1,740	ODP	78.5%	70.0%	10.0	2,403	2.0	4,795	88.5%	yes	1,747	1.000	1.8	4,253	0.23	2.25	542
Washington MS	HV-5	3.00		1,740	ODP	78.5%	70.0%	10.0	2,403	2.0	4,795	88.5%	yes	1,747	1.000	1.8	4,253	0.23	2.25	542
Wayne Hills HS	RTU-3	5.00	0	1,740	ODP	82.5%	70.0%	10.0	5,047	3.2	15,972	89.5%	yes	1,749	1.000	2.9	14,723	0.25	2.48	1,249
Wayne Hills HS	RTU-4	5.00	0	1,740	ODP	82.5%	70.0%	10.0	5,047	3.2	15,972	89.5%	yes	1,749	1.000	2.9	14,723	0.25	2.48	1,249
Wayne Hills HS	AHU-1	3.00	0	1,740	ODP	82.5%	70.0%	10.0	5,047	1.9	9,583	88.5%	yes	1,747	1.000	1.8	8,934	0.13	1.29	650
Wayne Hills HS	AHU-6	7.50	254U	1,750	ODP	78.5%	70.0%	10.0	5,047	5.0	25,179	91.7%	yes	1,761	1.000	4.3	21,555	0.72	7.18	3,624
Wayne Hills HS	HV-1	7.50	S213T	1,750	ODP	77.0%	70.0%	10.0	2,962	5.1	15,064	91.7%	yes	1,761	1.000	4.3	12,649	0.82	8.15	2,415
Wayne Hills HS	HV-2	5.00	S184T	1,740	ODP	81.6%	70.0%	10.0	2,962	3.2	9,477	89.5%	yes	1,749	1.000	2.9	8,640	0.28	2.82	836
Wayne Hills HS	HV-3	3.00	0	1,740	ODP	77.0%	70.0%	10.0	2,962	2.0	6,026	88.5%	yes	1,747	1.000	1.8	5,243	0.26	2.64	783
Wayne Hills HS	HV-4	3.00	0	1,740	ODP	77.0%	70.0%	10.0	2,962	2.0	6,026	88.5%	yes	1,747	1.000	1.8	5,243	0.26	2.64	783
Wayne Hills HS	HV-5	5.00	0	1,740	ODP	77.0%	70.0%	10.0	2,962	3.4	10,043	89.5%	yes	1,749	1.000	2.9	8,640	0.47	4.74	1,403
Wayne Hills HS	RTU-1 new	3.00	56HZ	1,740	ODP	77.0%	70.0%	10.0	5,047	2.0	10,268	88.5%	yes	1,747	1.000	1.8	8,934	0.26	2.64	1,334
Wayne Hills HS	HV-6	3.00	0	1,740	ODP	77.0%	70.0%	10.0	2,962	2.0	6,026	88.5%	yes	1,747	1.000	1.8	5,243	0.26	2.64	783
Wayne Hills HS	AHU-11	10.00	215T	1,760	ODP	78.5%	70.0%	10.0	5,047	6.7	33,572	91.7%	yes	1,759	1.000	5.7	28,740	0.96	9.58	4,833
Wayne Hills HS	P-14	25.00	284JM	1,760	ODP	88.5%	70.0%	4.7	3,407	14.8	50,253	93.6%	yes	1,771	1.000	13.9	47,515	0.80	3.75	2,738
Wayne Hills HS	P-15	25.00	284JM	1,760	ODP	88.5%	70.0%	4.7	3,407	14.8	50,253	93.6%	yes	1,771	1.000	13.9	47,515	0.80	3.75	2,738
Wayne Hills HS	P-16	25.00	284JM	1,760	ODP	88.5%	70.0%	4.7	3,407	14.8	50,253	93.6%	yes	1,771	1.000	13.9	47,515	0.80	3.75	2,738
Wayne Valley HS	RTU-5	5.00	0	1,740	ODP	82.5%	70.0%	10.0	4,498	3.2	14,237	89.5%	yes	1,749	1.000	2.9	13,124	0.25	2.48	1,114
Wayne Valley HS	RTU-5	5.00	0	1,740	ODP	82.5%	70.0%	10.0	4,498	3.2	14,237	89.5%	yes	1,749	1.000	2.9	13,124	0.25	2.48	1,114
Wayne Valley HS	HV-1	5.00	0	1,740	ODP	82.5%	70.0%	10.0	2,657	3.2	8,408	89.5%	yes	1,749	1.000	2.9	7,751	0.25	2.48	658
Wayne Valley HS	HV-9	5.00	0	1,740	ODP	82.5%	70.0%	10.0	2,657	3.2	8,408	89.5%	yes	1,749	1.000	2.9	7,751	0.25	2.48	658
Wayne Valley HS	HV-17	5.00	S184T	1,740	ODP	82.5%	70.0%	10.0	2,657	3.2	8,408	89.5%	yes	1,749	1.000	2.9	7,751	0.25	2.48	658
Wayne Valley HS	HV-19	5.00	S184T	1,740	ODP	82.5%	70.0%	10.0	2,657	3.2	8,408	89.5%	yes	1,749	1.000	2.9	7,751	0.25	2.48	658
Admin	RTU-1	3.00		1,740	ODP	78.5%	70.0%	12.0	3,826	2.0	7,635	88.5%	yes	1,747	1.000	1.8	6,772	0.23	2.71	863
									88,374	**118.9**	**411,741**					**107.8**	**373,905**	**11.1**	**98.2**	**37,836**

Notes:

1	Load fraction is estimated
2	Motor performance information (Efficiency/RPM) is from nameplates and standard motor catalogs
3	Motor Demand = HorsePower x .746kW/hp x Load Fraction / Efficiency
4	Motor Energy = Motor Demand x Annual Operation Hours
5	Demand Savings = PreInstall Demand - PostInstall Demand
6	Energy Savings = PreInstall Energy - Post-Install Energy

Appendix for ECM 9:
Premium Efficiency Motors

II. Manufacturer Specification Sheets

"Page content is subject to Confidentiality Restrictions"

This page is intentionally left blank.

Open Drip Proof
Premium Efficient Motors

Performance Data:
ODP - Open Drip Proof, Rigid Base
230/460 Volts, Three Phase, 1 through 100 Hp

Hp	kW	RPM	Frame	Catalog No.	Amps @ High V Full Load	Amps @ High V Locked Rotor	Full Load Torque Lb. Ft.	Efficiency % 1/2	Efficiency % 3/4	Efficiency % Full Load	Power Factor % 1/2	Power Factor % 3/4	Power Factor % Full Load	Bearings DE	Bearings ODE	Volt Code	"C" Dim.	Conn. Diag. No.
1	0.75	3450	56	EM3115	1.4	12.6	1.5	80.4	83.5	84.0	71	80	83	6205	6203	E1	11.06	CD0005
1	0.75	1740	143T	EM3116T	1.4	9.6	3.0	84.7	86.3	85.5	62	74	81	6205	6203	E1	11.62	CD0005
1	0.75	1140	145T	EM3156T	1.6	9.4	4.5	82.6	83.1	82.5	52	65	70	6205	6203	E1	13.00	CD0005
1 1/2	1.10	3450	143T	EM3120T	2.1	16.0	2.2	83.9	85.4	85.5	71	80	85	6205	6203	E1	11.12	CD0005
1 1/2	1.10	1740	145T	EM3154T	2.1	17.5	4.5	85.4	87.1	86.5	56	69	77	6205	6203	E1	12.12	CD0005
1 1/2	1.10	1170	182T	EM3207T	2.6	14.0	6.76	84.7	87.2	87.5	41	53	62	6206	6205	E1	15.00	CD0005
2	1.50	3450	143T	EM3155T	2.5	22.0	3.0	87.8	88.1	86.5	78	86	90	6205	6203	E1	11.62	CD0005
2	1.50	1725	145T	EM3157T	2.7	19.6	6.0	87.9	88.3	86.5	64	76	82	6205	6203	E1	13.00	CD0005
2	1.50	1170	184T	EM3215T	3.5	19.8	8.9	86.0	88.3	88.5	40	52	60	6206	6205	E1	16.50	CD0005
3	2.20	3450	145T	EM3158T	3.7	29.0	4.5	87.1	88.5	87.5	76	85	89	6205	6203	E1	13.00	CD0005
3	2.20	1760	182T	EM3211T	4.1	32.0	9.0	89.1	90.0	89.5	58	71	77	6206	6205	E1	15.00	CD0005
3	2.20	1160	213T	EM3305T	4.6	27.0	13.5	88.6	90.3	90.2	48	60	67	6307	6206	E1	16.32	CD0005
5	3.70	3500	182T	EM3212T	5.6	55.0	7.5	90.5	90.8	90.2	83	90	93	6206	6205	E1	15.00	CD0005
5	3.70	1750	184T	EM3218T	6.4	48.0	15.0	89.8	90.5	89.5	61	73	81	6206	6205	E1	16.50	CD0005
5	3.70	1160	215T	EM3309T	7.2	43.0	23.0	89.7	90.0	89.5	56	67	73	6307	6206	E1	18.20	CD0005
7 1/2	5.60	3500	184T	EM3219T	8.4	87.0	11.2	91.3	91.6	90.2	85	90	93	6206	6205	E1	16.50	CD0005
7 1/2	5.60	1760	213T	EM3311T	10.0	61.0	22.5	89.6	91.0	91.0	61	73	79	6307	6206	E1	16.32	CD0005
7 1/2	5.60	1180	254T	EM2506T	11.5	68.0	33.4	90.3	91.5	91.7	51	63	70	6309	6208	E1	23.19	CD0005
10	7.50	3500	213T	EM3312T	11.5	98.0	15.0	90.9	92.0	91.7	81	87	90	6307	6206	E1	16.32	CD0005
10	7.50	1760	215T	EM3313T	12.9	96.0	29.6	90.8	91.8	91.7	61	72	80	6307	6206	E1	17.45	CD0005
10	7.50	1180	256T	EM2511T	14.3	91.8	44.4	91.0	92.0	91.7	54	65	71	6309	6208	E1	23.19	CD0180
15	11.20	3525	215T	EM3314T	17.0	143	22.5	91.9	92.3	91.7	80	87	92	6307	6206	E1	17.45	CD0005
15	11.20	1765	254T	EM2513T	17.7	118	44.6	93.3	93.5	93.0	70	81	86	6309	6208	E1	21.69	CD0180
15	11.20	1180	284T	EM2524T	19.8	131	66.6	91.4	92.6	92.4	58	70	77	6311	6309	E1	23.81	CD0180
20	14.90	3510	254T	EM2514T	22.5	144.8	29.9	93.5	93.3	92.4	79	87	90	6309	6208	E1	21.69	CD0180
20	14.90	1765	256T	EM2515T	23.5	160.8	59.4	92.5	93.2	93.0	71	81	86	6309	6208	E1	21.69	CD0180
20	14.90	1175	286T	EM2528T	26.0	169	89.1	91.6	92.5	92.4	63	74	79	6311	6309	E1	25.06	CD0005
25	18.70	3520	256T	EM2516T	28.0	209	37.3	93.0	93.3	93.0	83	89	91	6309	6208	E1	21.69	CD0005
25	18.70	1770	284T	EM2531T	30.0	190.3	74.1	93.4	94.2	94.1	69	79	83	6311	6309	E1	23.81	CD0005
25	18.70	1180	324T	EM2532T	31.0	222	111	93.3	93.9	93.6	65	76	80	6312	6311	E1	26.69	CD0180
30	22.40	3540	284TS	EM2534T	34.0	229	44.5	93.3	93.8	93.6	82	87	89	6311	6309	E1	22.44	CD0005
30	22.40	1770	286T	EM2535T	35.0	223.6	88.9	93.6	94.2	94.1	72	82	85	6311	6309	E1	25.06	CD0005
30	22.40	1180	326T	EM2536T	37.0	267	133	93.3	93.9	93.6	69	78	82	6312	6311	E1	27.69	CD0180
40	30.00	3540	286TS	EM2538T	44.0	315	59.4	94.4	94.6	94.1	84	89	90	6311	6309	E1	23.69	CD0180
40	30.00	1775	324T	EM2539T	46.0	313	118	94.2	94.8	94.5	72	82	86	6312	6311	E1	26.69	CD0180
40	30.00	1185	364T	EM2540T	50.0	315	177	93.6	94.2	94.1	65	75	80	6313	6312	E1	29.69	CD0005
50	37.00	3540	324TS	EM2542T	56.0	353	74.1	93.7	94.0	93.6	81	87	89	6312	6311	E1	25.19	CD0180
50	37.00	1775	326T	EM2543T	57.0	378	148	94.5	94.9	94.5	75	84	87	6312	6311	E1	27.69	CD0180
50	37.00	1185	365T	EM2544T	62.0	380	221	93.9	94.4	94.1	66	76	80	6313	6312	E1	29.69	CD0180
60	45.00	3540	326TS	EM2546T	65.0	493	88.9	94.7	95.0	94.5	86	90	92	6312	6311	F	25.19	CD0180
60	45.00	1775	364T	EM2547T	68.0	470	177	94.9	95.3	95.0	77	85	87	6313	6311	F	30.69	CD0180
75	56.00	3540	364TS	EM2549T	82.0	557	111	95.1	95.0	94.5	86	90	91	6313	6311	F	25.81	CD0180
75	56.00	1775	365T	EM2551T	85.0	522	222	95.4	95.7	95.0	76	83	86	6313	6312	E1	29.69	CD0180
100	74.60	3540	365TS	EM2550T	109	748	148	95.1	95.0	94.5	86	90	91	6313	6311	F	26.81	CD0180

NOTE: Volt Code: E1=230/460 volts usable at 208, F=230/460 volts.
See page 38 for Layout drawing. See pages 44-45 for Connection Diagrams.
Efficiencies shown are nominal.
Data subject to change without notice. Contact Baldor for certified data.

ECM 10:
Walk-in Freezer/Cooler Controllers

ECM Overview

The purpose of a refrigeration compressor and related equipment is to remove heat energy from inside the enclosure to the unconditioned space out of the cooler. Under this innovative measure, Ameresco proposes to install evaporator fan controllers and new motors on each of the walk-in cooler evaporators at George Washington Middle School, Schuyler Colfax Middle School, Anthony Wayne Middle School, Wayne Hills High School, and Wayne Valley High School. The Frigitek® controller functions by sensing the operational status of the cooling system, and controlling the speed of the evaporator fans.

Figure 10.1: Typical Walk-in Freezer

ECM Detail

Existing System

Eleven walk-in coolers and freezer, located in the kitchens of District owned facilities, are equipped with evaporator units that maintain the required temperature in units. The fans on the evaporators operate at a constant speed continuously, when cooling is required and not required. The evaporator fans operating continuously at a constant speed use considerable electric energy and add waste heat to the inside of the cooler, raising the temperature, which in turn requires the compressor to operate more than necessary.

Proposed System

Ameresco proposes to install Frigitek® evaporator fan controllers and ECM motors in each of the walk-in coolers and freezers. The Frigitek® controller functions by sensing the operational status of the cooling system, and controlling the speed of the evaporator fans. It has been determined that the evaporator fan motors contribute a significant amount of heat inside the refrigerated space. By operating the fans at a low speed when no cooling is called for, and at high speed only when the system is actively cooling the refrigerator, much less heat is introduced into the refrigerator.

Figure 10.2: Evaporator fan controller

This saves energy in the cooled room in two ways:

1. Slowing the fan speed results in a significant saving in evaporator fan motor power.

2. The reduction in fan motor heat generated causes the refrigeration system to operate less, saving additional energy at the compressor.

The Frigitek® consists of three major parts:

1. The Frigitek® Control Unit- the Control Unit contains the electronics which switches the fan speed between high and low circuitry to monitor the Ice Sensor and a bypass relay.
2. A Signal Sensor- the Signal Sensor is used to monitor the cooling system and provide a signal to the Control Unit indicating whether the cooling system is actively cooling the room, or is idle.
3. Ice Sensor- the Ice Sensor (used only in above-freezing rooms) monitors the coil for frost. If frost is detected, the Control Unit will operate the fans at high speed until the frost is dissipated.

Equipment, Design and Construction Documentation

Equipment will be identified in submittals provided to District for approval prior to procurement. Documents will be submitted to the engineering maintenance department, for their review and comment. Upon approval, these will constitute the construction documents. Upon completion of the construction phase, the documents will be revised as needed to reflect "As-Built" conditions, and submitted in multiple to District for record.

Impact on Facility Operations and Performance

This measure will reduce energy cost of the compressor system that generates the cool air for the refrigerators. Energy will be saved at the evaporator fans, and through the reduction in heat generated by the evaporator motors that are in the space.

"Page content is subject to Confidentiality Restrictions"

Appendix for ECM 10:
Walk-in Freezer/Cooler Controllers

I. Energy Savings Calculations

"Page content is subject to Confidentiality Restrictions"

This page is intentionally left blank.

Project Template	
Energy and Demand Savings Summary	
Measure ID:	**10**
Measure Name:	**Walk-in Freezer/Cooler Controllers**
Measure Location:	
Engineers:	

Site Name:		**Anthony Wayne MS**	**Colfax MS**	**Washington MS**	**Wayne Hills HS**	**Wayne Valley HS**	**Summary**
Item	Units	Savings	Savings	Savings	Savings	Savings	
Electricity							
Energy On-Peak	kWh	5,843	5,843	5,843	8,501	12,474	38,504
Energy Off-Peak	kWh						
Energy Total	kWh	5,843	5,843	5,843	8,501	12,474	38,504
Demand On-Peak, Monthly	kW						
Demand On-Peak, Annual	kW						
Demand Off-Peak, Monthly	kW						
Demand Off-Peak, Annual	kW						
Fossil Fuel							
Natural Gas (NG)	Therms						
Liquid Propane Gas (LPG)	Gallons						
Steam	Mlbs						
Fuel Oil, #2	Gallons						
Fuel Oil, #4	Gallons						
Fuel Oil, #6	Gallons						
Miscellaneous	Misc						

Project Template
Anthony Wayne MS
Walk-in Freezer/Cooler Controllers

													Baseline						Proposed							Saved			
Building	Cooler Location	Cooler Description	# Evaps.	Motors /Evap	Motor Type (S/P)	Motor PF	Fan Motor Volts	Motor Amps	Motor Phase (1 or 3)	Compr. Phase	Normal Duty Cycle	Operating Hours/Yr	Total Fan Watts	Fan Energy (kWh)	Comp. Load Fan (BTU/H)	Compr. kW/HP	Compr. Load From Fan (Watts)	Compr. Load From Fan (kWh)	Controller Duty Cycle	Total Fan Watts	Annual Fan Energy (kWh)	Comp. Load Fan (BTU/H)	Compr. kW/HP	Compr. Load From Fan (Watts)	Compr. Load From Fan (kWh)	Fan Power (Watts)	Fan Energy Saved (kWh)	Compr. Energy (kWh)	Total Energy (kWh)
A	B	C	D	E	F	G	H	I	J	K	L	M	N	O	P	Q	R	S	T	U	V	W	X	Y	Z	AA	AB	AC	AD
Anthony Wayne MS	Kitchen	Walkin Freezer	1	2	S	0.66	208	2.3	1	1	40%	6,570	631	4,149	1,616	1.55	264	1,733	30%	318	2088	813.6	1.55	133	872	314	2,061	861	2,921
Anthony Wayne MS	Kitchen	Walkin Cooler	1	2	S	0.66	208	2.3	1	1	40%	6,570	631	4,149	1,616	1.55	264	1,733	30%	318	2088	813.6	1.55	133	872	314	2,061	861	2,921
														8,298				3,466			4,176				1,744		4,121	1,721	5,843

Cell Ref.	Comment
A-M	Data from Site Investigation
N	= [D] x [E] x [G]x [H]x [I]xSQRT([J])
O	= [N] x [M]/1000
P	= [N] x ([M]/8760) x 3.413
Q	= IF([K]=3,1.36,1.55)
R	= [P]/9500 x [Q] x 1000
S	= [R] x [M]/1000
T	=(1-IF([F]="S",0.243,0.25))x [L]
U	= (1-IF([F]="s",0.4967,0.5324)) x [N]
V	= [U] x [M]/1000
W	= [U] x ([M]/8760) x 3.413
X	= [Q]
Y	= [W]/9500 x [X] x 1000
Z	= [Y] x [M]/1000
AA	= [N] - [U]
AB	= [O] - [V]
AC	= [S] - [Z]
AD	= [AB] + [AC]

Project Template
Colfax MS
Walk-in Freezer/Cooler Controllers

													Baseline						Proposed							Saved			
Building	Cooler Location	Cooler Description	# Evaps.	Motors /Evap	Motor Type (S/P)	Motor PF	Fan Motor Volts	Motor Amps	Motor Phase (1 or 3)	Compr. Phase	Normal Duty Cycle	Operating Hours/Yr	Total Fan Watts	Fan Energy (kWh)	Comp. Load Fan (BTU/H)	Compr. kW/HP	Compr. Load From Fan (Watts)	Compr. Load From Fan (kWh)	Controller Duty Cycle	Total Fan Watts	Annual Fan Energy (kWh)	Comp. Load Fan (BTU/H)	Compr. kW/HP	Compr. Load From Fan (Watts)	Compr. Load From Fan (kWh)	Fan Power (Watts)	Fan Energy Saved (kWh)	Compr. Energy (kWh)	Total Energy (kWh)
A	C	C	D	E	F	G	H	I	J	K	L	M	N	O	P	Q	R	S	T	U	V	W	X	Y	Z	AA	AB	AC	AD
Colfax MS	Kitchen	Walkin Freezer	1	2	S	0.66	208	2.3	1	1	40%	6,570	631	4,149	1,616	1.55	264	1,733	30%	318	2088	813.6	1.55	133	872	314	2,061	861	2,921
Colfax MS	Kitchen	Walkin Cooler	1	2	S	0.66	208	2.3	1	1	40%	6,570	631	4,149	1,616	1.55	264	1,733	30%	318	2088	813.6	1.55	133	872	314	2,061	861	2,921
														8,298				3,466			4,176				1,744		4,121	1,721	5,843

Cell Ref.	Comment
A-M	Data from Site Investigation
N	= [D] x [E] x [G]x [H]x [I]xSQRT([J])
O	= [N] x [M]/1000
P	= [N] x ([M]/8760) x 3.413
Q	= IF([K]=3,1.36,1.55)
R	= [P]/9500 x [Q] x 1000
S	= [R] x [M]/1000
T	=(1-IF([F]="S",0.243,0.25))x [L]
U	= (1-IF([F]="s",0.4967,0.5324)) x [N]
V	= [U] x [M]/1000
W	= [U] x ([M]/8760) x 3.413
X	= [Q]
Y	= [W]/9500 x [X] x 1000
Z	= [Y] x [M]/1000
AA	= [N] - [U]
AB	= [O] - [V]
AC	= [S] - [Z]
AD	= [AB] + [AC]

Project Template
Washington MS
Walk-in Freezer/Cooler Controllers

													Baseline						Proposed							Saved			
Building	Cooler Location	Cooler Description	# Evaps.	Motors /Evap	Motor Type (S/P)	Motor PF	Fan Motor Volts	Motor Amps	Motor Phase (1 or 3)	Compr. Phase	Normal Duty Cycle	Operating Hours/Yr	Total Fan Watts	Fan Energy (kWh)	Comp. Load Fan (BTU/H)	Compr. kW/HP	Compr. Load From Fan (Watts)	Compr. Load From Fan (kWh)	Controller Duty Cycle	Total Fan Watts	Annual Fan Energy (kWh)	Comp. Load Fan (BTU/H)	Compr. kW/HP	Compr. Load From Fan (Watts)	Compr. Load From Fan (kWh)	Fan Power (Watts)	Fan Energy Saved (kWh)	Compr. Energy (kWh)	Total Energy (kWh)
A	B	C	D	E	F	G	H	I	J	K	L	M	N	O	P	Q	R	S	T	U	V	W	X	Y	Z	AA	AB	AC	AD
Washington MS	Kitchen	Walkin Freezer	1	2	S	0.66	208	2.3	1	1	40%	6,570	631	4,149	1,616	1.55	264	1,733	30%	318	2088	813.6	1.55	133	872	314	2,061	861	2,921
Washington MS	Kitchen	Walkin Cooler	1	2	S	0.66	208	2.3	1	1	40%	6,570	631	4,149	1,616	1.55	264	1,733	30%	318	2088	813.6	1.55	133	872	314	2,061	861	2,921
														8,298				3,466			4,176				1,744		4,121	1,721	5,843

Cell Ref.	Comment
A-M	Data from Site Investigation
N	= [D] x [E] x [G]x [H]x [I]xSQRT([J])
O	= [N] x [M]/1000
P	= [N] x ([M]/8760) x 3.413
Q	= IF([K]=3,1.36,1.55)
R	= [P]/9500 x [Q] x 1000
S	= [R] x [M]/1000
T	=(1-IF([F]="S",0.243,0.25))x [L]
U	= (1-IF([F]="s",0.4967,0.5324)) x [N]
V	= [U] x [M]/1000
W	= [U] x ([M]/8760) x 3.413
X	= [Q]
Y	= [W]/9500 x [X] x 1000
Z	= [Y] x [M]/1000
AA	= [N] - [U]
AB	= [O] - [V]
AC	= [S] - [Z]
AD	= [AB] + [AC]

Project Template
Wayne Hills HS
Walk-in Freezer/Cooler Controllers

													Baseline						Proposed								Saved			
Building	Cooler Location	Cooler Description	# Evaps.	Motors /Evap	Motor Type (S/P)	Motor PF	Fan Motor Volts	Motor Amps	Motor Phase (1 or 3)	Compr. Phase	Normal Duty Cycle	Operating Hours/Yr	Total Fan Watts	Fan Energy (kWh)	Comp. Load Fan (BTU/H)	Compr. kW/HP	Compr. Load From Fan (Watts)	Compr. Load From Fan (kWh)	Controller Duty Cycle	Total Fan Watts	Annual Fan Energy (kWh)	Comp. Load Fan (BTU/H)	Compr. kW/HP	Compr. Load From Fan (Watts)	Compr. Load From Fan (kWh)	Fan Power (Watts)	Fan Energy Saved (kWh)	Compr. Energy (kWh)	Total Energy (kWh)
A	B	C	D	E	F	G	H	I	J	K	L	M	N	O	P	Q	R	S	T	U	V	W	X	Y	Z	AA	AB	AC	AD
Wayne Hills HS	Kitchen	Walkin Freezer	2	2	S	0.66	206	1.8	1	1	40%	6,570	979	6,431	2,506	1.55	409	2,686	30%	493	3237	1,261.2	1.55	206	1,352	486	3,195	1,334	4,529
Wayne Hills HS	Kitchen	Walkin Cooler	2	2	S	0.66	115	2	2	1	40%	6,570	859	5,642	2,198	1.55	359	2,356	30%	432	2839	1,106.3	1.55	181	1,186	427	2,802	1,170	3,973
														12,073				5,042			6,076				2,538		5,997	2,505	8,501

Cell Ref.	Comment
A-M	Data from Site Investigation
N	= [D] x [E] x [G]x [H]x [I]xSQRT([J])
O	= [N] x [M]/1000
P	= [N] x ([M]/8760) x 3.413
Q	= IF([K]=3,1.36,1.55)
R	= [P]/9500 x [Q] x 1000
S	= [R] x [M]/1000
T	=(1-IF([F]="S",0.243,0.25))x [L]
U	= (1-IF([F]="s",0.4967,0.5324)) x [N]
V	= [U] x [M]/1000
W	= [U] x ([M]/8760) x 3.413
X	= [Q]
Y	= [W]/9500 x [X] x 1000
Z	= [Y] x [M]/1000
AA	= [N] - [U]
AB	= [O] - [V]
AC	= [S] - [Z]
AD	= [AB] + [AC]

Project Template
Wayne Valley HS
Walk-in Freezer/Cooler Controllers

													Baseline						Proposed								Saved			
Building	Cooler Location	Cooler Description	# Evaps.	Motors /Evap	Motor Type (S/P)	Motor PF	Fan Motor Volts	Motor Amps	Motor Phase (1 or 3)	Compr. Phase	Normal Duty Cycle	Operating Hours/Yr	Total Fan Watts	Fan Energy (kWh)	Comp. Load Fan (BTU/H)	Compr. kW/HP	Compr. Load From Fan (Watts)	Compr. Load From Fan (kWh)	Controller Duty Cycle	Total Fan Watts	Annual Fan Energy (kWh)	Comp. Load Fan (BTU/H)	Compr. kW/HP	Compr. Load From Fan (Watts)	Compr. Load From Fan (kWh)	Fan Power (Watts)	Fan Energy Saved (kWh)	Compr. Energy (kWh)	Total Energy (kWh)
A	B	C	D	E	F	G	H	I	J	K	L	M	N	O	P	Q	R	S	T	U	V	W	X	Y	Z	AA	AB	AC	AD
Wayne Valley HS	Kitchen	Walkin Freezer	2	2	S	0.66	206	1.8	1	1	40%	6,570	979	6,431	2,506	1.55	409	2,686	30%	493	3237	1,261.2	1.55	206	1,352	486	3,195	1,334	4,529
Wayne Valley HS	Kitchen	Walkin Cooler	2	2	S	0.66	115	2	2	1	40%	6,570	859	5,642	2,198	1.55	359	2,356	30%	432	2839	1,106.3	1.55	181	1,186	427	2,802	1,170	3,973
Wayne Valley HS	Kitchen	Walkin Cooler	2	2	S	0.66	115	2	2	1	40%	6,570	859	5,642	2,198	1.55	359	2,356	30%	432	2839	1,106.3	1.55	181	1,186	427	2,802	1,170	3,973
														17,715				7,399			8,916				3,724		8,799	3,675	12,474

Cell Ref.	Comment
A-M	Data from Site Investigation
N	= [D] x [E] x [G]x [H]x [I]xSQRT([J])
O	= [N] x [M]/1000
P	= [N] x ([M]/8760) x 3.413
Q	= IF([K]=3,1.36,1.55)
R	= [P]/9500 x [Q] x 1000
S	= [R] x [M]/1000
T	=(1-IF([F]="S",0.243,0.25))x [L]
U	= (1-IF([F]="s",0.4967,0.5324)) x [N]
V	= [U] x [M]/1000
W	= [U] x ([M]/8760) x 3.413
X	= [Q]
Y	= [W]/9500 x [X] x 1000
Z	= [Y] x [M]/1000
AA	= [N] - [U]
AB	= [O] - [V]
AC	= [S] - [Z]
AD	= [AB] + [AC]

Page content is subject to Confidentiality Restrictions

Appendix for ECM 10:
Walk-in Freezer/Cooler Controllers

II. Manufacturer Specification Sheets

"Page content is subject to Confidentiality Restrictions"

This page is intentionally left blank.

Introducing the Single-Phase Frigitek®

The Frigitek is an innovative product, designed to save energy used in walk-in refrigerators and freezers. Tests in actual operating refrigerators show that it can save at least 20 percent, and as much as 45 percent of the operating cost of the refrigerator.

The Frigitek functions by sensing the operational status of the cooling system, and controlling the speed of the evaporator fans. It has been determined that the evaporator fan motors contribute a significant amount of heat inside the refrigerated space. By operating the fans at a low speed when no cooling is called for, and at high speed only when the system is actively cooling the refrigerator, much less heat is introduced into the refrigerator. This results in a significant saving in evaporator fan motor power, while the reduction in fan motor heat generated causes the refrigeration system to operate less, saving additional energy at the compressor.

The Single-Phase Frigitek operates over a wide range of input voltages, from 115 VAC to 460 VAC. Although it is factory-set for optimum savings, the fan speed may be adjusted in the field, if necessary for proper operation in special installations. It is **not** a variable-frequency drive (VFD).

The Single-Phase Frigitek is designed to be easily installed with new refrigerators or freezers, or to be retrofit onto existing units. Installation typically takes about an hour, and can be done by any competent electrician or refrigeration technician. The Frigitek is usually mounted on the side wall of the evaporator case, or on the wall of the refrigerator.

In addition to its energy saving qualities, the Frigitek also has some intrinsic advantages. The low speed of the fans results in lower evaporation from sensitive stored foods, and the lower noise levels contribute to worker efficiency, and a more pleasant workspace.

The Single-Phase Frigitek is patented – U.S Patent Number 6,397,612.

For more information, please contact Energy Control Equipment, Inc, at 877-522-6924 (toll free), or visit our Web site, at www.frigitek.com. International customers, call +831-768-8848.

Energy Control Equipment, Inc. 316 Locust St., Watsonville, CA. 95076 831-768-8848

Single Phase Frigitek® Technical Description

The Single-Phase Frigitek consists of two major components: a Controller, and a "Tee" sensor. A typical system configuration is shown.

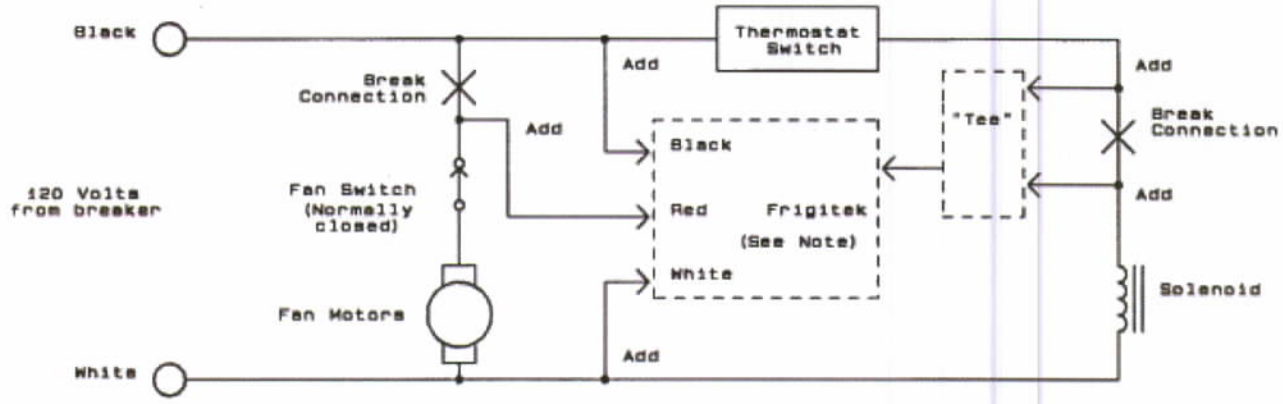

The **Frigitek Controller** is normally mounted on the front wall of the evaporator, with the wiring connected inside the evaporator case. Three wires connect the Frigitek controller into the evaporator fan circuit. The black and white wires are wired to the input power connections, and the red wire connects to the fans. The Frigitek commands the fans into high or low speed, and indicates the status of the system. A "Bypass" switch allows the operator to temporarily lock the system into high speed mode, if desired.

The **"Tee" Sensor** monitors current flow in the thermostat / solenoid valve circuit, and sends a low-voltage signal to the Controller whenever the valve is open (system cooling). It is usually installed near the solenoid valve and has a low-voltage cable which connects to the Frigitek controller.

An optional Temperature Differential Sensor ("TDS") is available for use in installations where it is difficult or inconvenient to access the thermostat/solenoid circuit, or where a solenoid is not used. The TDS is a stand-alone sensor, and does not require any connection into existing power wiring. A low-voltage cable connects to the Frigitek.

Frigiteks are also provided with an **Ice Sensor** (two for higher-powered units), which is used to determine if the evaporator has a buildup of ice. If ice is detected, the fans are operated at high speed until the ice is dissipated. The ice sensor is not used for freezer installations.

Up to three Frigiteks may be connected to one Tee Sensor, for use in refrigerators where one solenoid valve controls more than one evaporator. .

The "Tee" sensor, the "TDS" Sensor and the Ice Sensor interconnect cables are low-voltage cables, and require no conduit. The highest voltage in these cables is 12 volts.

Energy Control Equipment, Inc. 316 Locust St., Watsonville, CA. 95076 831-768-8848

Single-Phase Frigitek® Specifications

Controller Unit
Voltage – 115, 208-240, 460 VAC
Current – 5A to 25A
Size – 7" wide, 4.5" high, 2.5" deep
Weight – 2.5 Lbs
Mounting – Evaporator case or refrigerator wall.

Frigitek Controller

"Tee" Sensor
Sensor Input Voltage – 120 / 240 VAC
Sensor Input Current – .02A – 2.0A
Output Voltage – 300 mV, nominal
Size – 5.5" x 3" x 1.5"
Weight – 8 Oz
Mounting – Junction box, Solenoid Valve or Thermostat
Cabling – 2-wire, low voltage

"TDS"Sensor
Sensor Power – 12 VDC (supplied by Controller)
Sensor Input Current – .01A
Output Voltage – 0V / 12V
Size – 5.5" x 3" x 1.5"
Weight – 8 Oz
Mounting – Inside evaporator case
Cabling – 3-wire, low voltage

Tee Sensor
(with solenoid valve)

Options
Wall Mount – allows mounting the Frigitek on a wall.
System Monitor – A contact closure output from the Controller which allows a facility computer system to monitor the operation of the Frigitek.

Agency Approvals
ETL Testing Laboratories (ETL) (conforms to UL)
Canadian Standards Association (CSA
Conformité Européene (CE)
Verband der Elektrotechnik, Elektronik und Informationstechnik (VDE)

Energy Control Equipment, Inc. 316 Locust St., Watsonville, CA. 95076 831-768-8848

11/28/07

Introducing the Three-Phase Frigitek®

The Frigitek is an innovative product, designed to save energy used in industrial refrigerators and freezers. Tests in actual operating refrigerators show that it can save at least 30 percent, and as much as 70 percent of the operating cost of the evaporator fan motors in a typical industrial refrigerator.

The Frigitek functions by sensing the operational status of the cooling system, and controlling the speed of the evaporator fans. It has been determined that the evaporator fan motors contribute a significant amount of heat inside the refrigerated space. By operating the fans at a low speed when no cooling is called for, and at high speed only when the system is actively cooling the refrigerator, much less heat is introduced into the refrigerator. In three-phase systems, this also results in a significant saving in evaporator fan motor power, while the reduction in fan motor heat generated causes the refrigeration system to operate less, saving additional energy at the compressor.

The Three-Phase Frigitek operates over a wide range of input voltages, from 208 VAC to 460 VAC. It is factory-configured for the evaporator and no adjustments are necessary during the installation. It is **not** a variable-frequency drive (VFD).

Controller Module

The Three-Phase Frigitek is designed to be easily installed with new refrigerators or freezers, or to be retrofit onto existing units. Installation typically takes about two hours, and can be done by any competent electrician or refrigeration technician. The Power Unit assembly is usually mounted on the side wall or the ceiling of the refrigerator.

In addition to its energy saving qualities, the Frigitek also has some protection features. A phase-drop monitoring circuit protects the motors against single-phasing, and a "soft-start" feature always starts the motors in low-speed mode when power is first applied.

The Three-Phase Frigitek has a patent application pending approval. For more information, please contact Energy Control Equipment, Inc, at 877-522-6924 (toll free), or visit our Web site, at www.frigitek.com. International customers, call +831-768-8848.

Energy Control Equipment, Inc. 316 Locust St., Watsonville, CA. 95076 831-768-8848

Three-Phase Frigitek® Technical Description

The Three-Phase Frigitek consists of four major components: a Controller, a "Tee" sensor, a Power Unit, and a Speed Control Module. A typical system configuration is shown.

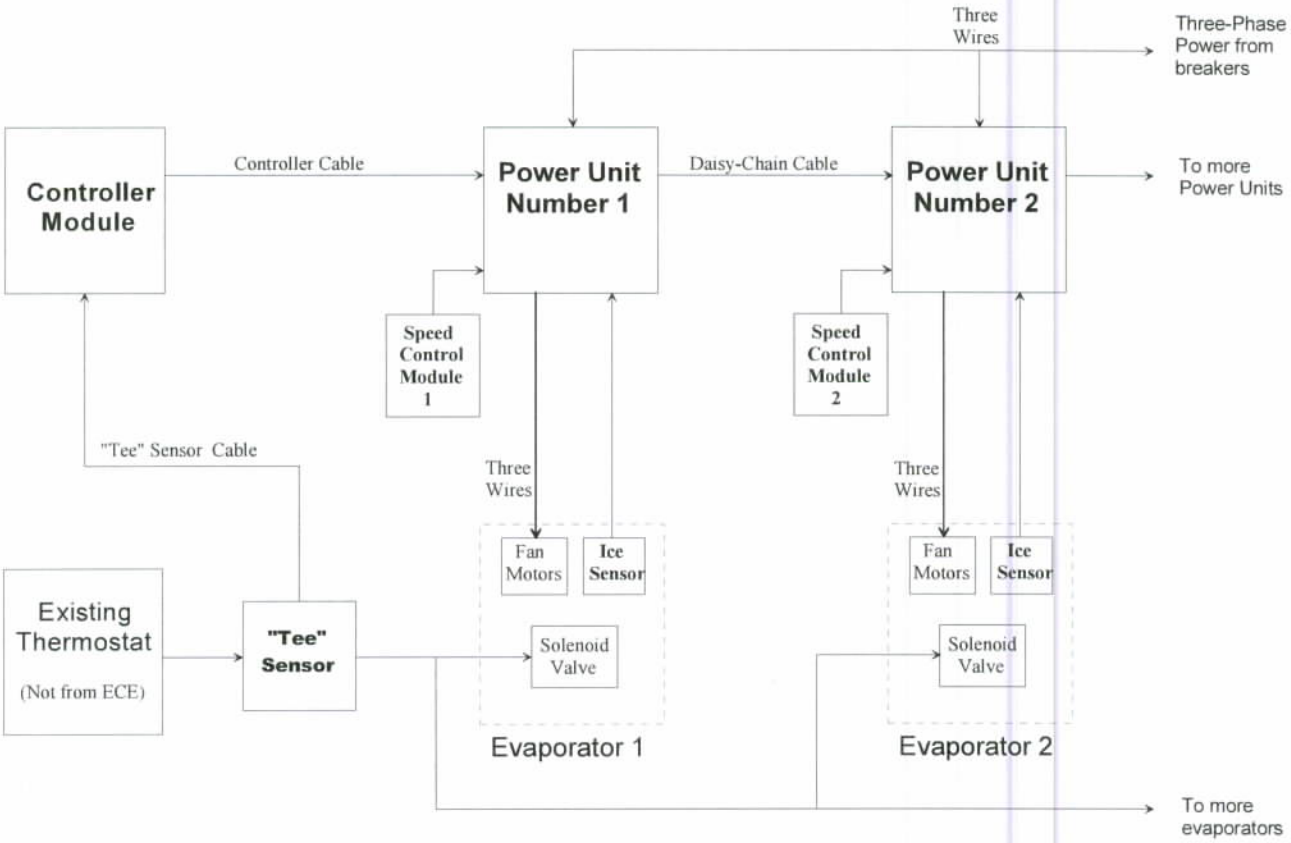

The **"Tee" Sensor** monitors current flow in the thermostat / solenoid valve circuit, and sends a low-voltage signal to the Controller whenever the valve is open (system cooling).

The **Controller Module** commands the Power Units into high or low speed, and indicates the status of the system and the Power Units. A "Bypass" switch allows the operator to temporarily lock the system into high speed mode, if desired.

The **Power Unit** switches the evaporator fans between high speed and low speed, and monitors the associated evaporator coil for ice. Detected ice causes the Power Unit to switch to high speed mode until the ice has dissipated.

The **Speed Control Module** sets the low speed RPM of the fan motor(s).

Multiple Power Units may be connected to one Controller via a "Daisy-Chain" system. The three-phase power for different Power Units may come from different breakers.

All system interconnect cables are low-voltage cables, and require no special conduit. The highest voltage in the interconnect cables is 24 volts.

The system includes a customer-selectable feature called "Circulation Enhancement". When enabled, this feature causes the fans to run at high speed for one minute every ten minutes, if the system remains in low speed for extended periods of time.

Three-Phase Frigitek® Specifications

Power Unit / Speed Control Module
Voltage – 208-240, 460 VAC, Three-Phase
Horsepower – 1 Hp to 20 Hp per Power Unit
Size – The Power Unit and Speed Control Module are shipped from the factory mounted on a wooden plate 16" wide by 24" high. The assembly is approximately 6" deep.
Weight – Approximately 40 Lbs. (complete assembly)
Mounting – Wall or ceiling

Power Unit Assembly

Controller Module
Voltage – 24VDC (supplied by Power Unit)
Size – 7" wide, 4.5" high, 2.5" deep
Weight – 2.5 Lbs
Mounting – Wall

"Tee" Sensor
Sensor Input Voltage – 120 / 240 VAC
Sensor Input Current – .02A – 2.0A
Output Voltage – 300 mV, nominal
Size – 5.5" x 3" x 1.5"
Weight – 8 Oz
Mounting – Junction box, Solenoid Valve or Thermostat

Controller Module

Options
Ceiling Mount Bracket – allows suspending the Power Unit assembly from a ceiling.
System Monitor – A contact closure output from the Controller which allows a facility computer system to monitor the operation of the Frigitek.
Temperature Differential Sensor – for use where there is no solenoid-operated valve for the "Tee" Sensor.

"Tee" Sensor

Agency Approvals
ETL Testing Laboratories (ETL) (conforms to UL)
(with solenoid valve)
Canadian Standards Association (CSA)
Conformité Européene (CE)
Verband der Elektrotechnik, Elektronik und Informationstechnik (VDE)

Energy Control Equipment, Inc. 316 Locust St., Watsonville, CA. 95076 831-768-8848

Introducing EC Motors and the Frigitek® ECMotor Controller

EC motors are a dramatic improvement over the older shaded pole motors commonly used in refrigeration systems. They are actually DC motors with an electronic commutation control to make them turn. ("EC" = "Electronically Commutated") They typically can save about 50% of the energy used by the shaded-pole motors they replace. Because of their improved efficiency, some states have mandated their use in new equipment.

The addition of the Frigitek ECMotor Controller to an evaporator using the EC motors can significantly increase the savings provided by the motors alone.

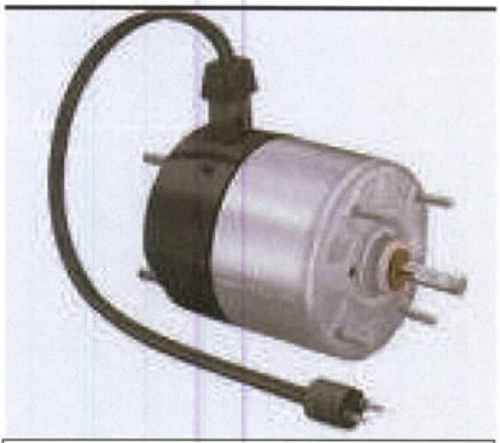

The EC Motor

The Frigitek ECMotor Controller functions by sensing the operational status of the cooling system, and controlling the speed of the evaporator fans. It is a fact that all of the electrical power which is used by the fan motors ends up as heat inside the refrigerated space. By operating the fans at a low speed when no cooling is called for, and at high speed only when the system is actively cooling the refrigerator, much less heat is introduced into the refrigerator. In addition to the direct saving in evaporator fan motor power, the reduction in fan motor heat also causes a significant reduction in refrigeration system operation, saving enough energy at the compressor to almost double the savings provided by the EC motors alone.

The Frigitek ECMotor Controller is designed to be easily installed when upgrading to EC motors, or to be retrofit into existing units. Installation typically takes about a half hour (as does each EC motor), and can be done by any competent electrician or refrigeration technician. The ECMotor Controller is usually mounted inside the evaporator case, in the compartment with the electrical connections.

The ECMotor Controller

In addition to its energy saving qualities, the Frigitek ECMotor Controller also provides some intrinsic advantages. The low speed of the fans results in lower evaporation from sensitive stored foods, and the lower noise levels contribute to worker efficiency and a more pleasant workspace.

The Frigitek ECMotor Controller is patent pending.

Energy Control Equipment, Inc. 316 Locust St., Watsonville, CA. 95076 831-768-8848

Frigitek® ECMotor Controller Technical Description

The Frigitek® ECMotor Controller consists of three major components: a Speed Controller, Temperature Differential Sensors, and an Ice Sensor.

The ECMotor Controller is normally mounted inside the evaporator, inside the wiring compartment. Three cables connect the Controller into the evaporator system. One cable is wired to the power connections, one to the Temperature Differential Sensors, and one to the Ice Sensor.

The **Temperature Differential Sensors** (TDS) monitor the temperature difference across the evaporator expansion valve. This difference in temperature indicates whether or not refrigerant is flowing through the evaporator. The Controller commands the fans into high speed when refrigerant is flowing, and into low speed when it is not. The TDS circuitry is contained inside the Controller, and the two sensors are mounted in the piping compartment on the opposite end of the evaporator from the Controller. A low-voltage cable connects the TDS sensors to the Controller.

The **Ice Sensor** is used to determine if the evaporator has developed an ice buildup. If ice is detected, the fans are operated at high speed until the ice is dissipated. The ice sensor is not used for freezer installations.

The "TDS" Sensor and the Ice Sensor interconnect cables are low-voltage cables, and require no conduit. The highest voltage in these cables is 12 volts.

The low speed for the EC motor is typically 500 RPM, a speed which ECE has determined to provide the best balance between savings and air flow.

The ECMotor Controller package includes an accessory kit of connectors and wire so that the installer will have all the parts necessary to make the installation. The Accessory Kit contains:

A) Four-pin power source wire assembly (2 feet)
B) Three-pin TDS wire assembly (15 feet)
C) Split foam spools (2 each)
D) Two-pin Ice Sensor wire assembly
E) 18 gauge black wire (15 feet)
F) Tee Taps - Maroon (18-22 AWG)
G) Tee Taps - Blue (14-16 AWG)
H) Male bullet connector (1)
I) Male disconnects
J) Tee Taps - Yellow (10-12 AWG)
K) Rubber grommets (1/4" x 3/8")
L) Decal for outside of evaporator case (1)

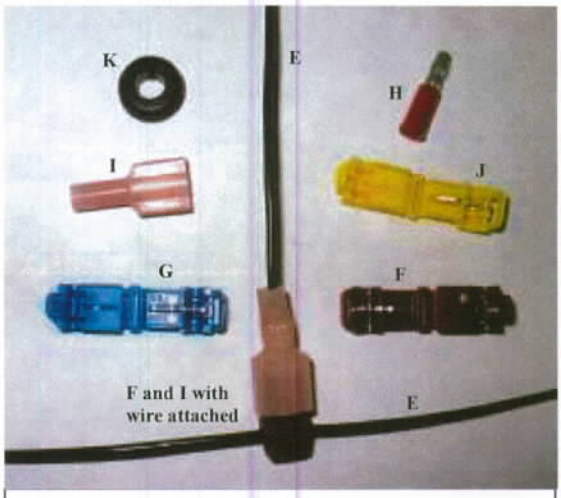

Accessory Connectors

The complete manual for the installation of retrofit EC motors and the Frigitek® ECMotor Controller is available for download at our website - www.frigitek.com.

Energy Control Equipment, Inc. 316 Locust St., Watsonville, CA. 95076 831-768-8848

12/21/09

Frigitek® ECMotor Controller Specifications

Controller Unit
Voltage – 115 VAC or 208-240 VAC, set at the factory
Current – .15A
Motor Control current - .15mA / motor
Size – 5.5" x 3.25" x 2.0"
Weight – 10.8 Oz
Mounting – Inside evaporator case
Connections - Plug-in connections for Power, TDS Sensor and Ice Sensor. Factory-wired cables are provided for these connections.

ECMotor Controller Power Cable
A two-foot Power Cable Assembly with "faston" connectors on one end, and a four-pin connector on the other. The four-pin connector matches the power connector on the ECMotor Controller case.

ECMotor Controller Power Cable

"TDS" Sensors
Sensor Power – 12 VDC (supplied by Controller)
Sensor Current – .1 mA
Size – .2" x .5" (Sensor Tip)
Weight – 1 Oz
Mounting – On expansion valve
Cabling – 3-wire, low voltage

The TDS Sensors

Ice Sensor
Sensor Power – 12 VDC (supplied by Controller)
Sensor Current – .1 mA
Size – .2" x .5" (Sensor Tip)
Weight – 1 Oz
Mounting – Attached to evaporator fins
Cabling – 2-wire, low voltage

The Ice Sensor

Options
No options are available.

For more information, please contact Energy Control Equipment, Inc, at 877-522-6924 (toll free), or visit our Web site, at www.frigitek.com. International customers, please call +1-831-768-8848.

ECM 11:
High Efficiency Transformers

ECM Overview

Ameresco proposes to replace twenty four existing step-down transformers with a new energy-efficient transformer , the transformers are located at Terhune ES, Fallon ES, Kennedy ES, Lafayette ES, Pines Lake ES, Ryerson ES, Dey ES, Anthony Wayne MS, and Wayne Valley HS. The transformers identified are a dry-type indoor transformer that step-down 480 volt Delta power to 208Y/120 volt power. Ameresco proposes to replace these transformers with a new premium efficiency unit that will reduce the electric losses and lower the cooling load in the equipment room.

Figure 11.1: Existing standard efficiency transformer at Wayne Hills High School

ECM Detail

Existing System

Low voltage power distribution is provided by dry-type transformers. The transformer converts 480 Volt Delta power to 208Y/120-volt service. The low voltage distribution systems typically serve convenience wall outlets and other like loads. Plugged loads often include personal computers and refrigerators. Unlike lighting, computers impose non-linear, harmonic loads back on the transformer. Most of the transformers in operation are not selected nor designed to operate under such conditions. The resulting effect of these types of loads is an increase in transformer electrical energy losses, dissipated in the form of heat. These losses result in unnecessary electrical energy consumption, and occasionally, transformer overheating and failure.

Table 11.1: Transformer Audit

Building	Location	QTY.	kVA	Primary	Secondary.
Albert Payson Terhune ES	Mechanical Room	1	30	480 Delta	208Y/120
Albert Payson Terhune ES	Mechanical Room	1	150	480 Delta	208Y/120
Anthony Wayne MS	Mechanical Room	1	45	480 Delta	208Y/120
Anthony Wayne MS	Mechanical Room	1	75	480 Delta	208Y/120
Anthony Wayne MS	Mechanical Room	1	112.5	480 Delta	208Y/120
Anthony Wayne MS	Mechanical Room	1	225	480 Delta	208Y/120
Anthony Wayne MS	Mechanical Room	1	500	480 Delta	208Y/120
James Fallon ES	Mechanical Room	3	30	480 Delta	208Y/120

"Page content is subject to Confidentiality Restrictions"

James Fallon ES	Mechanical Room	2	45	480 Delta	208Y/120
James Fallon ES	Mechanical Room	1	75	480 Delta	208Y/120
John F. Kennedy ES	Mechanical Room	1	30	480 Delta	208Y/120
John F. Kennedy ES	Mechanical Room	1	75	480 Delta	208Y/120
Lafayette ES	Mechanical Room	1	15	480 Delta	208Y/120
Lafayette ES	Mechanical Room	1	30	480 Delta	208Y/120
Lafayette ES	Mechanical Room	1	75	480 Delta	208Y/120
Pines Lake ES	Mechanical Room	1	150	480 Delta	208Y/120
Ryerson ES	Mechanical Room	1	75	480 Delta	208Y/120
Theunis Dey ES	Mechanical Room	2	30	480 Delta	208Y/120
Wayne Valley HS	Mechanical Room	1	75	480 Delta	208Y/120
Wayne Valley HS	Mechanical Room	1	112.5	480 Delta	208Y/120

Most transformers in use today are loaded at about 20-35% of their total capacity. They are designed to be able to transform the electricity up to their design ratings and are most efficient at or around the design rating. For normal transformers operating at low levels is inefficient. The standard low voltage step-down transformer is widely considered a commodity and as such the only perceived differentiator is price – lowest purchase cost typically wins. Commercial transformer specifications rarely require a minimum efficiency. As one would expect, building a less efficient transformer is cheaper than building a more efficient one, so a typical low-first-cost transformer will have a low up-front cost but high operating cost, with the lifetime cost of the operating losses exceeding the purchase cost many times over.

During the detailed audit, Ameresco will conduct a detailed inventory of each transformer and take sample power readings to determine the actual load on each transformer.

Proposed System

Ameresco proposes to replace twenty four identified low voltage transformers, the transformers are located at Terhune ES, Fallon ES, Kennedy ES, Lafayette ES, Pines Lake ES, Ryerson ES, Dey ES, Anthony Wayne MS, Wayne Valley HS with a new unit that meets the federal Energy Star program requirements for energy efficiency under non-linear load conditions. Specifically, the new transformer will be selected to meet NEMA TP-1 efficiencies under a K-7 load profile. The K-factor is an overall measurement of the level of harmonics in a system. Typical K-factors range from 4 to 9 in a mixed (linear and non-linear) load environment, such as a commercial office space. Higher harmonic levels are mostly associated with applications having a high density of computer and other non-linear loads.

Figure 11.2: New energy efficient transformers will be installed in place of existing standard efficiency transformers.

Ameresco recommends installing Powersmiths' E-SAVER Model C3L transformers under this ECM.

Installation of the measure will require the isolation of the affected transformer and the associated distribution panel that is fed by the transformer while the transformer is removed and the new transformer installed.

"Page content is subject to Confidentiality Restrictions"

- *Detailed Project Scope:*

Typical installation sequence of the transformers would be as follows:

- Lockout/tagout panel feeding step-down transformer
- Disconnect primary and secondary feeds into transformer
- Remove and dispose of existing transformer, recycling where possible
- Install new transformer on same pad or floor footprint
- Reconnect primary and secondary feeds into transformer
- Ameresco excludes the repair or replacement of existing conductors, breakers and disposal of any hazardous waste materials.

Implementation of this measure will also provide the School District with a valuable capital upgrade that will improve the reliability of the electrical distribution system and reduce the likelihood of failure that can occur with overheated transformers. The proposed measure will significantly reduce electric energy costs.

- *Energy Savings Proposed*

The Powersmiths' E-SAVER model C3L transformers proposed for this measure are designed to increase efficiency of the electricity transformation. Understanding that efficiency and power quality are complimentary goals, Powersmiths designed its transformers with both in mind. Furthermore, they have been independently validated at Oak Ridge National Lab, a US DOE test facility, to run at 98% efficiency under single-phase nonlinear load profile, a dramatic improvement over traditional transformers. The Figure 11.3 shows the efficiency and percent loaded an example transformer would have pre- and post-retrofit.

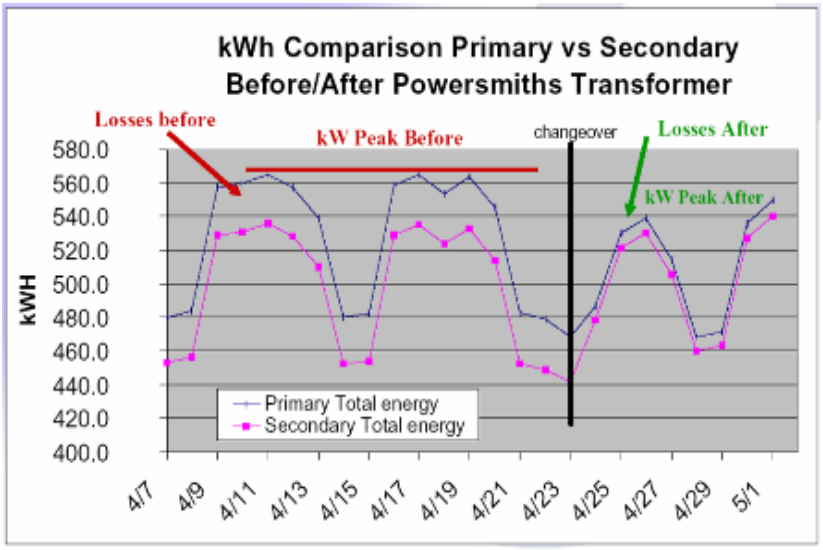

Figure 11.3: This chart shows a graphical comparison of the performance between a standard transformer and a Powersmiths Transformer.

Equipment, Design and Construction Documentation

Equipment will be identified in submittals provided to District for approval prior to procurement. Documents will be submitted to the engineering maintenance department, for their review and comment. Upon approval, these will constitute the construction documents. Upon completion of the construction

phase, the documents will be revised as needed to reflect "As-Built" conditions, and submitted in multiple to District for record.

Impact on Facility Operations and Performance

Modern and properly specified transformers operate at substantially higher efficiencies than older transformers and those not intended for a mixed load environment. The proposed measure will also improve the reliability of the electrical distribution system with the replacement of aging equipment.

Appendix for ECM 11: High Efficiency Transformers

I. Energy Savings Calculations

This page is intentionally left blank.

Project Template	
Energy and Demand Savings Summary	
Measure ID:	**11**
Measure Name:	**High Efficiency Transformers**
Measure Location:	
Engineers:	

Site Name:		**Dey ES**	**Fallon ES**	**Kennedy ES**	**Lafayette ES**	**Pines Lake ES**	**Ryerson ES**	**Terhune ES**	**Anthony Wayne MS**	**Wayne Valley HS**	**Summary**
Item	Units	Savings	Savings	Savings	Savings	Savings	Savings	Savings	Savings	Savings	
Electricity											
Energy On-Peak	kWh	2,575	10,775	3,967	4,867	4,803	2,679	6,090	24,177	6,806	66,740
Energy Off-Peak	kWh	3,816	15,916	5,855	7,186	7,069	3,947	8,976	35,664	10,030	98,458
Energy Total	kWh	6,390	26,691	9,822	12,053	11,872	6,626	15,067	59,840	16,836	165,197
Demand On-Peak, Monthly	kW	0.7	3.0	1.1	1.4	1.4	0.8	1.7	6.8	1.9	18.8
Demand On-Peak, Annual	kW	8.6	36.3	13.4	2.7	16.2	9.1	20.6	81.8	23.0	211.8
Demand Off-Peak, Monthly	kW										
Demand Off-Peak, Annual	kW										
Fossil Fuel											
Natural Gas (NG)	Therms										
Liquid Propane Gas (LPG)	Gallons										
Steam	Mlbs										
Fuel Oil, #2	Gallons										
Fuel Oil, #4	Gallons										
Fuel Oil, #6	Gallons										
Miscellaneous	Misc										

Project Template
Theunis Dey-Elementary School
High Efficiency Transformers

	Existing Transformer Details														Proposed Transformer Details						Savings		
Location	Unit Size (kVA)	Occ. Hours % Load	UnOcc. Hours % Load	Occ On-Peak Hrs.	UnOcc On-Peak Hrs.	Occ Off-Peak Hrs.	UnOcc Off-Peak Hrs.	Load Power Factor	Existing Occ. Efficiency	Existing UnOcc. Efficiency	Existing Occ. kW Losses	Existing UnOcc. kW Losses	Existing Annual Peak Losses (kWh)	Existing Annual Off Peak Losses (kWh)	Proposed Occ. Efficiency	Proposed UnOcc. Efficiency	Proposed Occ. kW Losses	Proposed UnOcc. kW Losses	Proposed Annual Peak Losses (kWh)	Proposed Annual Off Peak Losses (kWh)	Monthly Demand Savings (kW)	Annual Peak Electric Energy Savings (kWh)	Annual Off Peak Electric Energy Savings (kWh)
A	B	C	D	E	F	G	H	I	J	K	L	M	N	O	P	Q	R	S	T	U	V	W	X
	30.0	15.0%	10.0%	1,760	1,786	0	5,214	95.0%	90.1%	86.0%	0.47	0.46	1,657	2,414	97.5%	96.7%	0.11	0.10	370	506	0.36	1,287	1,908
	30.0	15.0%	10.0%	1,760	1,786	0	5,214	95.0%	90.1%	86.0%	0.47	0.46	1,657	2,414	97.5%	96.7%	0.11	0.10	370	506	0.36	1,287	1,908
Totals	**60.0**	**15.0%**	**10.0%**								**0.94**	**0.93**	**3,315**	**4,828**			**0.22**	**0.19**	**740**	**1,013**	**0.72**	**2,575**	**3,816**

Cell Ref.	Comment
A	Location of Transformer
B	Transformer Nameplate Rating - kVA
C - D	Estimated existing transformer loading as a percent of nameplate rating
E - H	Facility operating hours from EMS calculation
I	Estimated load powerfactor seen at the transformer - output
J	= [col B] x [col D] x 1,000 ÷ ([col B] x [col D] x 1,000 + (standard no load losses) + [col D]^2 x (standard full load losses minus standard no load losses))
K	= [col B] x [col E] x 1,000 ÷ ([col B] x [col E] x 1,000 + (standard no load losses) + [col E]^2 x (standard full load losses minus standard no load losses))
L	= ([col B] x [col D] x [col J] ÷ [col K] - [col B] x [col D] x [col J])
M	= ([col B] x [col E] x [col J] ÷ [col L] - [col B] x [col E] x [col J])
N	= [col M] x [col F] + [col N] x [col G]
O	= [col M] x [col H] + [col N] x [col I]
P	= [col B] x [col D] x 1,000 ÷ ([col B] x [col D] x 1,000 + (esaver no load losses) + [col D]^2 x (esaver full load losses minus esaver no load losses))
Q	= [col B] x [col E] x 1,000 ÷ ([col B] x [col E] x 1,000 + (esaver no load losses) + [col E]^2 x (esaver full load losses minus esaver no load losses))
R	= ([col B] x [col D] x [col J] ÷ [col Q] - [col B] x [col D] x [col J])
S	= ([col B] x [col E] x [col J] ÷ [col R] - [col B] x [col E] x [col J])
T	= [col S] x [col F] + [col T] x [col G]
U	= [col S] x [col H] + [col T] x [col I]
V	= [col M] - [col S]
W	= [col N] - [col T]
X	= [col O] -[col U]

ESAVER-C3L loss table

kVA	No Load (W)	Full load (W)
15	55	851
30	90	1313
45	116	1552
75	157	2204
112.5	217	2546
150	298	3388
225	423	4881
300	526	6066
500	795	8527
750	1132	11423

Standard AL 115C loss table

kVA	No Load (W)	Full load (W)
15	325	985
30	480	1218
45	750	1835
75	956	2789
112.5	1448	3559
150	1727	4620
225	1950	6740
300	2760	7160
500	3830	9830
750	3980	16800

Project Template
James Fallon-Elementary School
High Efficiency Transformers

	Existing Transformer Details														Proposed Transformer Details						Savings		
Location	Unit Size (kVA)	Occ. Hours % Load	UnOcc. Hours % Load	Occ On-Peak Hrs.	UnOcc On-Peak Hrs.	Occ Off-Peak Hrs.	UnOcc Off-Peak Hrs.	Load Power Factor	Existing Occ. Efficiency	Existing UnOcc. Efficiency	Existing Occ. kW Losses	Existing UnOcc. kW Losses	Existing Annual Peak Losses (kWh)	Existing Annual Off-Peak Losses (kWh)	Proposed Occ. Efficiency	Proposed UnOcc. Efficiency	Proposed Occ. kW Losses	Proposed UnOcc. kW Losses	Proposed Annual Peak Losses (kWh)	Proposed Annual Off-Peak Losses (kWh)	Monthly Demand Savings (kW)	Annual Peak Electric Energy Savings (kWh)	Annual Off-Peak Electric Energy Savings (kWh)
A	B	C	D	E	F	G	H	I	J	K	L	M	N	O	P	Q	R	S	T	U	V	W	X
Closet by Gymnasium	30.0	15.0%	10.0%	1,760	1,786	0	5,214	95.0%	90.1%	86.0%	0.47	0.46	1,657	2,414	97.5%	96.7%	0.11	0.10	370	506	0.36	1,287	1,908
Room 20	30.0	15.0%	10.0%	1,760	1,786	0	5,214	95.0%	90.1%	86.0%	0.47	0.46	1,657	2,414	97.5%	96.7%	0.11	0.10	370	506	0.36	1,287	1,908
	30.0	15.0%	10.0%	1,760	1,786	0	5,214	95.0%	90.1%	86.0%	0.47	0.46	1,657	2,414	97.5%	96.7%	0.11	0.10	370	506	0.36	1,287	1,908
Closet by Gymnasium	45.0	15.0%	10.0%	1,760	1,786	0	5,214	95.0%	89.7%	85.5%	0.74	0.72	2,586	3,769	97.9%	97.2%	0.14	0.12	469	646	0.59	2,117	3,123
Room 20	45.0	15.0%	10.0%	1,760	1,786	0	5,214	95.0%	89.7%	85.5%	0.74	0.72	2,586	3,769	97.9%	97.2%	0.14	0.12	469	646	0.59	2,117	3,123
	75.0	15.0%	10.0%	1,760	1,786	0	5,214	95.0%	91.9%	88.5%	0.95	0.93	3,321	4,826	98.2%	97.7%	0.19	0.17	641	879	0.75	2,680	3,947
Totals	**255.0**	**15.0%**	**10.0%**								**3.83**	**3.76**	**13,464**	**19,606**			**0.81**	**0.71**	**2,689**	**3,690**	**3.02**	**10,775**	**15,916**

Cell Ref.	Comment
A	Location of Transformer
B	Transformer Nameplate Rating - kVA
C - D	Estimated existing transformer loading as a percent of nameplate rating
E - H	Facility operating hours from EMS calculation
I	Estimated load powerfactor seen at the transformer - output
J	= [col B] x [col D] x 1,000 ÷ ([col B] x [col D] x 1,000 + (standard no load losses) + [col D]^2 x (standard full load losses minus standard no load losses))
K	= [col B] x [col E] x 1,000 ÷ ([col B] x [col E] x 1,000 + (standard no load losses) + [col E]^2 x (standard full load losses minus standard no load losses))
L	= ([col B] x [col D] x [col J] ÷ [col K] - [col B] x [col D] x [col J])
M	= ([col B] x [col E] x [col J] ÷ [col L] - [col B] x [col E] x [col J])
N	= [col M] x [col F] + [col N] x [col G]
O	= [col M] x [col H] + [col N] x [col I]
P	= [col B] x [col D] x 1,000 ÷ ([col B] x [col D] x 1,000 + (esaver no load losses) + [col D]^2 x (esaver full load losses minus esaver no load losses))
Q	= [col B] x [col E] x 1,000 ÷ ([col B] x [col E] x 1,000 + (esaver no load losses) + [col E]^2 x (esaver full load losses minus esaver no load losses))
R	= ([col B] x [col D] x [col J] ÷ [col Q] - [col B] x [col D] x [col J])
S	= ([col B] x [col E] x [col J] ÷ [col R] - [col B] x [col E] x [col J])
T	= [col S] x [col F] + [col T] x [col G]
U	= [col S] x [col H] + [col T] x [col I]
V	= [col M] - [col S]
W	= [col N] - [col T]
X	= [col O] -[col U]

ESAVER-C3L loss table		
kVA	No Load (W)	Full load (W)
15	55	851
30	90	1313
45	116	1552
75	157	2204
112.5	217	2546
150	298	3388
225	423	4881
300	526	6066
500	795	8527
750	1132	11423

Standard AL 115C loss table		
kVA	No Load (W)	Full load (W)
15	325	985
30	480	1218
45	750	1835
75	956	2789
112.5	1448	3559
150	1727	4620
225	1950	6740
300	2760	7160
500	3830	9830
750	3980	16800

Project Template
John F. Kennedy-Elementary School
High Efficiency Transformers

	Existing Transformer Details														Proposed Transformer Details						Savings		
Location	Unit Size (kVA)	Occ. Hours % Load	UnOcc. Hours % Load	Occ On-Peak Hrs.	UnOcc On-Peak Hrs.	Occ Off-Peak Hrs.	UnOcc Off-Peak Hrs.	Load Power Factor	Existing Occ. Efficiency	Existing UnOcc. Efficiency	Existing Occ. kW Losses	Existing UnOcc. kW Losses	Existing Annual Peak Losses (kWh)	Existing Annual Off Peak Losses (kWh)	Proposed Occ. Efficiency	Proposed UnOcc. Efficiency	Proposed Occ. kW Losses	Proposed UnOcc. kW Losses	Proposed Annual Peak Losses (kWh)	Proposed Annual Off Peak Losses (kWh)	Monthly Demand Savings (kW)	Annual Peak Electric Energy Savings (kWh)	Annual Off Peak Electric Energy Savings (kWh)
A	B	C	D	E	F	G	H	I	J	K	L	M	N	O	P	Q	R	S	T	U	V	W	X
	30.0	15.0%	10.0%	1,760	1,786	0	5,214	95.0%	90.1%	86.0%	0.47	0.46	1,657	2,414	97.5%	96.7%	0.11	0.10	370	506	0.36	1,287	1,908
2nd Floor Hall Custodian Close	75.0	15.0%	10.0%	1,760	1,786	0	5,214	95.0%	91.9%	88.5%	0.95	0.93	3,321	4,826	98.2%	97.7%	0.19	0.17	641	879	0.75	2,680	3,947
Totals	**105.0**	**15.0%**	**10.0%**								**1.42**	**1.39**	**4,978**	**7,240**			**0.30**	**0.27**	**1,011**	**1,385**	**1.11**	**3,967**	**5,855**

Cell Ref.	Comment
A	Location of Transformer
B	Transformer Nameplate Rating - kVA
C - D	Estimated existing transformer loading as a percent of nameplate rating
E - H	Facility operating hours from EMS calculation
I	Estimated load powerfactor seen at the transformer - output
J	= [col B] x [col D] x 1,000 ÷ ([col B] x [col D] x 1,000 + (standard no load losses) + [col D]^2 x (standard full load losses minus standard no load losses))
K	= [col B] x [col E] x 1,000 ÷ ([col B] x [col E] x 1,000 + (standard no load losses) + [col E]^2 x (standard full load losses minus standard no load losses))
L	= ([col B] x [col D] x [col J] ÷ [col K] - [col B] x [col D] x [col J])
M	= ([col B] x [col E] x [col J] ÷ [col L] - [col B] x [col E] x [col J])
N	= [col M] x [col F] + [col N] x [col G]
O	= [col M] x [col H] + [col N] x [col I]
P	= [col B] x [col D] x 1,000 ÷ ([col B] x [col D] x 1,000 + (esaver no load losses) + [col D]^2 x (esaver full load losses minus esaver no load losses))
Q	= [col B] x [col E] x 1,000 ÷ ([col B] x [col E] x 1,000 + (esaver no load losses) + [col E]^2 x (esaver full load losses minus esaver no load losses))
R	= ([col B] x [col D] x [col J] ÷ [col Q] - [col B] x [col D] x [col J])
S	= ([col B] x [col E] x [col J] ÷ [col R] - [col B] x [col E] x [col J])
T	= [col S] x [col F] + [col T] x [col G]
U	= [col S] x [col H] + [col T] x [col I]
V	= [col M] - [col S]
W	= [col N] - [col T]
X	= [col O] -[col U]

ESAVER-C3L loss table		
kVA	No Load (W)	Full load (W)
15	55	851
30	90	1313
45	116	1552
75	157	2204
112.5	217	2546
150	298	3388
225	423	4881
300	526	6066
500	795	8527
750	1132	11423

Standard AL 115C loss table		
kVA	No Load (W)	Full load (W)
15	325	985
30	480	1218
45	750	1835
75	956	2789
112.5	1448	3559
150	1727	4620
225	1950	6740
300	2760	7160
500	3830	9830
750	3980	16800

Project Template
Lafayette-Elementary School
High Efficiency Transformers

	Existing Transformer Details														Proposed Transformer Details						Savings		
Location	Unit Size (kVA)	Occ. Hours % Load	UnOcc. Hours % Load	Occ On-Peak Hrs.	UnOcc On-Peak Hrs.	Occ Off-Peak Hrs.	UnOcc Off-Peak Hrs.	Load Power Factor	Existing Occ. Efficiency	Existing UnOcc. Efficiency	Existing Occ. kW Losses	Existing UnOcc. kW Losses	Existing Annual Peak Losses (kWh)	Existing Annual Off-Peak Losses (kWh)	Proposed Occ. Efficiency	Proposed UnOcc. Efficiency	Proposed Occ. kW Losses	Proposed UnOcc. kW Losses	Proposed Annual Peak Losses (kWh)	Proposed Annual Off-Peak Losses (kWh)	Monthly Demand Savings (kW)	Annual Peak Electric Energy Savings (kWh)	Annual Off-Peak Electric Energy Savings (kWh)
A	B	C	D	E	F	G	H	I	J	K	L	M	N	O	P	Q	R	S	T	U	V	W	X
	15.0	15.0%	10.0%	1,955	1,591	0	5,214	95.0%	86.9%	81.9%	0.32	0.32	1,132	1,643	96.9%	96.0%	0.07	0.06	231	312	0.25	902	1,331
	30.0	15.0%	10.0%	1,955	1,591	0	5,214	95.0%	90.1%	86.0%	0.47	0.46	1,659	2,414	97.5%	96.7%	0.11	0.10	373	506	0.36	1,286	1,908
	75.0	15.0%	10.0%	1,955	1,591	0	5,214	95.0%	91.9%	88.5%	0.95	0.93	3,325	4,826	98.2%	97.7%	0.19	0.17	645	879	0.75	2,679	3,947
Totals	**120.0**	**15.0%**	**10.0%**								**1.74**	**1.70**	**6,116**	**8,883**			**0.37**	**0.33**	**1,249**	**1,697**	**1.37**	**4,867**	**7,186**

Cell Ref.	Comment
A	Location of Transformer
B	Transformer Nameplate Rating - kVA
C - D	Estimated existing transformer loading as a percent of nameplate rating
E - H	Facility operating hours from EMS calculation
I	Estimated load powerfactor seen at the transformer - output
J	= [col B] x [col D] x 1,000 ÷ ([col B] x [col D] x 1,000 + (standard no load losses) + [col D]^2 x (standard full load losses minus standard no load losses))
K	= [col B] x [col E] x 1,000 ÷ ([col B] x [col E] x 1,000 + (standard no load losses) + [col E]^2 x (standard full load losses minus standard no load losses))
L	= ([col B] x [col D] x [col J] ÷ [col K] - [col B] x [col D] x [col J])
M	= ([col B] x [col E] x [col J] ÷ [col L] - [col B] x [col E] x [col J])
N	= [col M] x [col F] + [col N] x [col G]
O	= [col M] x [col H] + [col N] x [col I]
P	= [col B] x [col D] x 1,000 ÷ ([col B] x [col D] x 1,000 + (esaver no load losses) + [col D]^2 x (esaver full load losses minus esaver no load losses))
Q	= [col B] x [col E] x 1,000 ÷ ([col B] x [col E] x 1,000 + (esaver no load losses) + [col E]^2 x (esaver full load losses minus esaver no load losses))
R	= ([col B] x [col D] x [col J] ÷ [col Q] - [col B] x [col D] x [col J])
S	= ([col B] x [col E] x [col J] ÷ [col R] - [col B] x [col E] x [col J])
T	= [col S] x [col F] + [col T] x [col G]
U	= [col S] x [col H] + [col T] x [col I]
V	= [col M] - [col S]
W	= [col N] - [col T]
X	= [col O] -[col U]

ESAVER-C3L loss table		
kVA	No Load (W)	Full load (W)
15	55	851
30	90	1313
45	116	1552
75	157	2204
112.5	217	2546
150	298	3388
225	423	4881
300	526	6066
500	795	8527
750	1132	11423

Standard AL 115C loss table		
kVA	No Load (W)	Full load (W)
15	325	985
30	480	1218
45	750	1835
75	956	2789
112.5	1448	3559
150	1727	4620
225	1950	6740
300	2760	7160
500	3830	9830
750	3980	16800

Project Template
Pines Lake-Elementary School
High Efficiency Transformers

	Existing Transformer Details														Proposed Transformer Details						Savings		
Location	Unit Size (kVA)	Occ. Hours % Load	UnOcc. Hours % Load	Occ On-Peak Hrs.	UnOcc On-Peak Hrs.	Occ Off-Peak Hrs.	UnOcc Off-Peak Hrs.	Load Power Factor	Existing Occ. Efficiency	Existing UnOcc. Efficiency	Existing Occ. kW Losses	Existing UnOcc. kW Losses	Existing Annual Peak Losses (kWh)	Existing Annual Off-Peak Losses (kWh)	Proposed Occ. Efficiency	Proposed UnOcc. Efficiency	Proposed Occ. kW Losses	Proposed UnOcc. kW Losses	Proposed Annual Peak Losses (kWh)	Proposed Annual Off-Peak Losses (kWh)	Monthly Demand Savings (kW)	Annual Peak Electric Energy Savings (kWh)	Annual Off-Peak Electric Energy Savings (kWh)
A	B	C	D	E	F	G	H	I	J	K	L	M	N	O	P	Q	R	S	T	U	V	W	X
Utility Closet	150.0	15.0%	10.0%	1,760	1,786	0	5,214	95.0%	92.6%	89.5%	1.70	1.67	5,976	8,698	98.4%	97.9%	0.35	0.31	1,173	1,629	1.35	4,803	7,069
Totals	**150.0**	**15.0%**	**10.0%**								**1.70**	**1.67**	**5,976**	**8,698**			**0.35**	**0.31**	**1,173**	**1,629**	**1.35**	**4,803**	**7,069**

Cell Ref.	Comment
A	Location of Transformer
B	Transformer Nameplate Rating - kVA
C - D	Estimated existing transformer loading as a percent of nameplate rating
E - H	Facility operating hours from EMS calculation
I	Estimated load powerfactor seen at the transformer - output
J	= [col B] x [col D] x 1,000 ÷ ([col B] x [col D] x 1,000 + (standard no load losses) + [col D]^2 x (standard full load losses minus standard no load losses))
K	= [col B] x [col E] x 1,000 ÷ ([col B] x [col E] x 1,000 + (standard no load losses) + [col E]^2 x (standard full load losses minus standard no load losses))
L	= ([col B] x [col D] x [col J] ÷ [col K] - [col B] x [col D] x [col J])
M	= ([col B] x [col E] x [col J] ÷ [col L] - [col B] x [col E] x [col J])
N	= [col M] x [col F] + [col N] x [col G]
O	= [col M] x [col H] + [col N] x [col I]
P	= [col B] x [col D] x 1,000 ÷ ([col B] x [col D] x 1,000 + (esaver no load losses) + [col D]^2 x (esaver full load losses minus esaver no load losses))
Q	= [col B] x [col E] x 1,000 ÷ ([col B] x [col E] x 1,000 + (esaver no load losses) + [col E]^2 x (esaver full load losses minus esaver no load losses))
R	= ([col B] x [col D] x [col J] ÷ [col Q] - [col B] x [col D] x [col J])
S	= ([col B] x [col E] x [col J] ÷ [col R] - [col B] x [col E] x [col J])
T	= [col S] x [col F] + [col T] x [col G]
U	= [col S] x [col H] + [col T] x [col I]
V	= [col M] - [col S]
W	= [col N] - [col T]
X	= [col O] -[col U]

ESAVER-C3L loss table		
kVA	No Load (W)	Full load (W)
15	55	851
30	90	1313
45	116	1552
75	157	2204
112.5	217	2546
150	298	3388
225	423	4881
300	526	6066
500	795	8527
750	1132	11423

Standard AL 115C loss table		
kVA	No Load (W)	Full load (W)
15	325	985
30	480	1218
45	750	1835
75	956	2789
112.5	1448	3559
150	1727	4620
225	1950	6740
300	2760	7160
500	3830	9830
750	3980	16800

Project Template
Ryerson-Elementary School
High Efficiency Transformers

	Existing Transformer Details														Proposed Transformer Details						Savings		
Location	Unit Size (kVA)	Occ. Hours % Load	UnOcc. Hours % Load	Occ On-Peak Hrs.	UnOcc On-Peak Hrs.	Occ Off-Peak Hrs.	UnOcc Off-Peak Hrs.	Load Power Factor	Existing Occ. Efficiency	Existing UnOcc. Efficiency	Existing Occ. kW Losses	Existing UnOcc. kW Losses	Existing Annual Peak Losses (kWh)	Existing Annual Off-Peak Losses (kWh)	Proposed Occ. Efficiency	Proposed UnOcc. Efficiency	Proposed Occ. kW Losses	Proposed UnOcc. kW Losses	Proposed Annual Peak Losses (kWh)	Proposed Annual Off-Peak Losses (kWh)	Monthly Demand Savings (kW)	Annual Peak Electric Energy Savings (kWh)	Annual Off-Peak Electric Energy Savings (kWh)
A	B	C	D	E	F	G	H	I	J	K	L	M	N	O	P	Q	R	S	T	U	V	W	X
	75.0	15.0%	10.0%	2,053	1,493	0	5,214	95.0%	91.9%	88.5%	0.95	0.93	3,327	4,826	98.2%	97.7%	0.19	0.17	648	879	0.75	2,679	3,947
Totals	**75.0**	**15.0%**	**10.0%**								**0.95**	**0.93**	**3,327**	**4,826**			**0.19**	**0.17**	**648**	**879**	**0.75**	**2,679**	**3,947**

Cell Ref.	Comment
A	Location of Transformer
B	Transformer Nameplate Rating - kVA
C - D	Estimated existing transformer loading as a percent of nameplate rating
E - H	Facility operating hours from EMS calculation
I	Estimated load powerfactor seen at the transformer - output
J	= [col B] x [col D] x 1,000 ÷ ([col B] x [col D] x 1,000 + (standard no load losses) + [col D]^2 x (standard full load losses minus standard no load losses))
K	= [col B] x [col E] x 1,000 ÷ ([col B] x [col E] x 1,000 + (standard no load losses) + [col E]^2 x (standard full load losses minus standard no load losses))
L	= ([col B] x [col D] x [col J] ÷ [col K] - [col B] x [col D] x [col J])
M	= ([col B] x [col E] x [col J] ÷ [col L] - [col B] x [col E] x [col J])
N	= [col M] x [col F] + [col N] x [col G]
O	= [col M] x [col H] + [col N] x [col I]
P	= [col B] x [col D] x 1,000 ÷ ([col B] x [col D] x 1,000 + (esaver no load losses) + [col D]^2 x (esaver full load losses minus esaver no load losses))
Q	= [col B] x [col E] x 1,000 ÷ ([col B] x [col E] x 1,000 + (esaver no load losses) + [col E]^2 x (esaver full load losses minus esaver no load losses))
R	= ([col B] x [col D] x [col J] ÷ [col Q] - [col B] x [col D] x [col J])
S	= ([col B] x [col E] x [col J] ÷ [col R] - [col B] x [col E] x [col J])
T	= [col S] x [col F] + [col T] x [col G]
U	= [col S] x [col H] + [col T] x [col I]
V	= [col M] - [col S]
W	= [col N] - [col T]
X	= [col O] -[col U]

ESAVER-C3L loss table		
kVA	No Load (W)	Full load (W)
15	55	851
30	90	1313
45	116	1552
75	157	2204
112.5	217	2546
150	298	3388
225	423	4881
300	526	6066
500	795	8527
750	1132	11423

Standard AL 115C loss table		
kVA	No Load (W)	Full load (W)
15	325	985
30	480	1218
45	750	1835
75	956	2789
112.5	1448	3559
150	1727	4620
225	1950	6740
300	2760	7160
500	3830	9830
750	3980	16800

Project Template
Albert Payson Terhune-Elementary Schoo
High Efficiency Transformer

	Existing Transformer Details														Proposed Transformer Details						Savings		
Location	Unit Size (kVA)	Occ. Hours % Load	UnOcc. Hours % Load	Occ On-Peak Hrs.	UnOcc On-Peak Hrs.	Occ Off-Peak Hrs.	UnOcc Off-Peak Hrs.	Load Power Factor	Existing Occ. Efficiency	Existing UnOcc. Efficiency	Existing Occ. kW Losses	Existing UnOcc. kW Losses	Existing Annual Peak Losses (kWh)	Existing Annual Off-Peak Losses (kWh)	Proposed Occ. Efficiency	Proposed UnOcc. Efficiency	Proposed Occ. kW Losses	Proposed UnOcc. kW Losses	Proposed Annual Peak Losses (kWh)	Proposed Annual Off-Peak Losses (kWh)	Monthly Demand Savings (kW)	Annual Peak Electric Energy Savings (kWh)	Annual Off-Peak Electric Energy Savings (kWh)
A	B	C	D	E	F	G	H	I	J	K	L	M	N	O	P	Q	R	S	T	U	V	W	X
Utility Closet	30.0	15.0%	10.0%	1,760	1,786	0	5,214	95.0%	90.1%	86.0%	0.47	0.46	1,657	2,414	97.5%	96.7%	0.11	0.10	370	506	0.36	1,287	1,908
Outside	150.0	15.0%	10.0%	1,760	1,786	0	5,214	95.0%	92.6%	89.5%	1.70	1.67	5,976	8,698	98.4%	97.9%	0.35	0.31	1,173	1,629	1.35	4,803	7,069
Totals	**180.0**	**15.0%**	**10.0%**								**2.17**	**2.13**	**7,633**	**11,112**			**0.46**	**0.41**	**1,542**	**2,136**	**1.71**	**6,090**	**8,976**

Cell Ref.	Comment
A	Location of Transformer
B	Transformer Nameplate Rating - kVA
C - D	Estimated existing transformer loading as a percent of nameplate rating
E - H	Facility operating hours from EMS calculation
I	Estimated load powerfactor seen at the transformer - output
J	= [col B] x [col D] x 1,000 ÷ ([col B] x [col D] x 1,000 + (standard no load losses) + [col D]^2 x (standard full load losses minus standard no load losses))
K	= [col B] x [col E] x 1,000 ÷ ([col B] x [col E] x 1,000 + (standard no load losses) + [col E]^2 x (standard full load losses minus standard no load losses))
L	= ([col B] x [col D] x [col J] ÷ [col K] - [col B] x [col D] x [col J])
M	= ([col B] x [col E] x [col J] ÷ [col L] - [col B] x [col E] x [col J])
N	= [col M] x [col F] + [col N] x [col G]
O	= [col M] x [col H] + [col N] x [col I]
P	= [col B] x [col D] x 1,000 ÷ ([col B] x [col D] x 1,000 + (esaver no load losses) + [col D]^2 x (esaver full load losses minus esaver no load losses))
Q	= [col B] x [col E] x 1,000 ÷ ([col B] x [col E] x 1,000 + (esaver no load losses) + [col E]^2 x (esaver full load losses minus esaver no load losses))
R	= ([col B] x [col D] x [col J] ÷ [col Q] - [col B] x [col D] x [col J])
S	= ([col B] x [col E] x [col J] ÷ [col R] - [col B] x [col E] x [col J])
T	= [col S] x [col F] + [col T] x [col G]
U	= [col S] x [col H] + [col T] x [col I]
V	= [col M] - [col S]
W	= [col N] - [col T]
X	= [col O] -[col U]

ESAVER-C3L loss table

kVA	No Load (W)	Full load (W)
15	55	851
30	90	1313
45	116	1552
75	157	2204
112.5	217	2546
150	298	3388
225	423	4881
300	526	6066
500	795	8527
750	1132	11423

Standard AL 115C loss table

kVA	No Load (W)	Full load (W)
15	325	985
30	480	1218
45	750	1835
75	956	2789
112.5	1448	3559
150	1727	4620
225	1950	6740
300	2760	7160
500	3830	9830
750	3980	16800

Project Template
Anthony Wayne-Middle School
High Efficiency Transformers

	Existing Transformer Details														Proposed Transformer Details						Savings		
Location	Unit Size (kVA)	Occ. Hours % Load	UnOcc. Hours % Load	Occ On-Peak Hrs.	UnOcc On-Peak Hrs.	Occ Off-Peak Hrs.	UnOcc Off-Peak Hrs.	Load Power Factor	Existing Occ. Efficiency	Existing UnOcc. Efficiency	Existing Occ. kW Losses	Existing UnOcc. kW Losses	Existing Annual Peak Losses (kWh)	Existing Annual Off-Peak Losses (kWh)	Proposed Occ. Efficiency	Proposed UnOcc. Efficiency	Proposed Occ. kW Losses	Proposed UnOcc. kW Losses	Proposed Annual Peak Losses (kWh)	Proposed Annual Off-Peak Losses (kWh)	Monthly Demand Savings (kW)	Annual Peak Electric Energy Savings (kWh)	Annual Off Peak Electric Energy Savings (kWh)
A	B	C	D	E	F	G	H	I	J	K	L	M	N	O	P	Q	R	S	T	U	V	W	X
Mechanical Room 106	45.0	15.0%	10.0%	3,546	0	799	4,415	95.0%	89.7%	85.5%	0.74	0.72	2,609	3,779	97.9%	97.2%	0.14	0.12	500	659	0.59	2,109	3,120
By Stage	75.0	15.0%	10.0%	3,546	0	799	4,415	95.0%	91.9%	88.5%	0.95	0.93	3,359	4,844	98.2%	97.7%	0.19	0.17	684	898	0.75	2,675	3,945
Storage Rm 128	112.5	15.0%	10.0%	3,546	0	799	4,415	95.0%	91.9%	88.4%	1.42	1.40	5,038	7,297	98.4%	97.9%	0.26	0.23	908	1,212	1.16	4,130	6,085
Utility Closet	225.0	15.0%	10.0%	3,546	0	799	4,415	95.0%	94.3%	91.8%	1.95	1.90	6,932	9,942	98.5%	98.0%	0.50	0.44	1,763	2,358	1.46	5,169	7,583
Utility Closet	500.0	15.0%	10.0%	3,546	0	799	4,415	95.0%	95.0%	92.8%	3.77	3.70	13,357	19,325	98.7%	98.3%	0.92	0.83	3,264	4,394	2.85	10,093	14,931
Totals	**957.5**	**15.0%**	**10.0%**								**8.83**	**8.64**	**31,295**	**45,186**			**2.01**	**1.79**	**7,118**	**9,523**	**6.82**	**24,177**	**35,664**

Cell Ref.	Comment
A	Location of Transformer
B	Transformer Nameplate Rating - kVA
C - D	Estimated existing transformer loading as a percent of nameplate rating
E - H	Facility operating hours from EMS calculation
I	Estimated load powerfactor seen at the transformer - output
J	= [col B] x [col D] x 1,000 ÷ ([col B] x [col D] x 1,000 + (standard no load losses) + [col D]^2 x (standard full load losses minus standard no load losses))
K	= [col B] x [col E] x 1,000 ÷ ([col B] x [col E] x 1,000 + (standard no load losses) + [col E]^2 x (standard full load losses minus standard no load losses))
L	= ([col B] x [col D] x [col J] ÷ [col K] - [col B] x [col D] x [col J])
M	= ([col B] x [col E] x [col J] ÷ [col L] - [col B] x [col E] x [col J])
N	= [col M] x [col F] + [col N] x [col G]
O	= [col M] x [col H] + [col N] x [col I]
P	= [col B] x [col D] x 1,000 ÷ ([col B] x [col D] x 1,000 + (esaver no load losses) + [col D]^2 x (esaver full load losses minus esaver no load losses))
Q	= [col B] x [col E] x 1,000 ÷ ([col B] x [col E] x 1,000 + (esaver no load losses) + [col E]^2 x (esaver full load losses minus esaver no load losses))
R	= ([col B] x [col D] x [col J] ÷ [col Q] - [col B] x [col D] x [col J])
S	= ([col B] x [col E] x [col J] ÷ [col R] - [col B] x [col E] x [col J])
T	= [col S] x [col F] + [col T] x [col G]
U	= [col S] x [col H] + [col T] x [col I]
V	= [col M] - [col S]
W	= [col N] - [col T]
X	= [col O] -[col U]

ESAVER-C3L loss table		
kVA	No Load (W)	Full load (W)
15	55	851
30	90	1313
45	116	1552
75	157	2204
112.5	217	2546
150	298	3388
225	423	4881
300	526	6066
500	795	8527
750	1132	11423

Standard AL 115C loss table		
kVA	No Load (W)	Full load (W)
15	325	985
30	480	1218
45	750	1835
75	956	2789
112.5	1448	3559
150	1727	4620
225	1950	6740
300	2760	7160
500	3830	9830
750	3980	16800

Project Template
Wayne Valley-High School
High Efficiency Transformers

	Existing Transformer Details														Proposed Transformer Details						Savings		
Location	Unit Size (kVA)	Occ. Hours % Load	UnOcc. Hours % Load	Occ On-Peak Hrs.	UnOcc On-Peak Hrs.	Occ Off-Peak Hrs.	UnOcc Off-Peak Hrs.	Load Power Factor	Existing Occ. Efficiency	Existing UnOcc. Efficiency	Existing Occ. kW Losses	Existing UnOcc. kW Losses	Existing Annual Peak Losses (kWh)	Existing Annual Off-Peak Losses (kWh)	Proposed Occ. Efficiency	Proposed UnOcc. Efficiency	Proposed Occ. kW Losses	Proposed UnOcc. kW Losses	Proposed Annual Peak Losses (kWh)	Proposed Annual Off-Peak Losses (kWh)	Monthly Demand Savings (kW)	Annual Peak Electric Energy Savings (kWh)	Annual Off-Peak Electric Energy Savings (kWh)
A	B	C	D	E	F	G	H	I	J	K	L	M	N	O	P	Q	R	S	T	U	V	W	X
Utility Closet 2005 Wing	75.0	15.0%	10.0%	3,546	0	756	4,458	95.0%	91.9%	88.5%	0.95	0.93	3,359	4,843	98.2%	97.7%	0.19	0.17	684	897	0.75	2,675	3,945
	112.5	15.0%	10.0%	3,546	0	756	4,458	95.0%	91.9%	88.4%	1.42	1.40	5,038	7,296	98.4%	97.9%	0.26	0.23	908	1,211	1.16	4,130	6,085
Totals	**187.5**	**15.0%**	**10.0%**								**2.37**	**2.32**	**8,397**	**12,138**			**0.45**	**0.40**	**1,592**	**2,109**	**1.92**	**6,806**	**10,030**

Cell Ref.	Comment
A	Location of Transformer
B	Transformer Nameplate Rating - kVA
C - D	Estimated existing transformer loading as a percent of nameplate rating
E - H	Facility operating hours from EMS calculation
I	Estimated load powerfactor seen at the transformer - output
J	= [col B] x [col D] x 1,000 ÷ ([col B] x [col D] x 1,000 + (standard no load losses) + [col D]^2 x (standard full load losses minus standard no load losses))
K	= [col B] x [col E] x 1,000 ÷ ([col B] x [col E] x 1,000 + (standard no load losses) + [col E]^2 x (standard full load losses minus standard no load losses))
L	= ([col B] x [col D] x [col J] ÷ [col K] - [col B] x [col D] x [col J])
M	= ([col B] x [col E] x [col J] ÷ [col L] - [col B] x [col E] x [col J])
N	= [col M] x [col F] + [col N] x [col G]
O	= [col M] x [col H] + [col N] x [col I]
P	= [col B] x [col D] x 1,000 ÷ ([col B] x [col D] x 1,000 + (esaver no load losses) + [col D]^2 x (esaver full load losses minus esaver no load losses))
Q	= [col B] x [col E] x 1,000 ÷ ([col B] x [col E] x 1,000 + (esaver no load losses) + [col E]^2 x (esaver full load losses minus esaver no load losses))
R	= ([col B] x [col D] x [col J] ÷ [col Q] - [col B] x [col D] x [col J])
S	= ([col B] x [col E] x [col J] ÷ [col R] - [col B] x [col E] x [col J])
T	= [col S] x [col F] + [col T] x [col G]
U	= [col S] x [col H] + [col T] x [col I]
V	= [col M] - [col S]
W	= [col N] - [col T]
X	= [col O] -[col U]

ESAVER-C3L loss table		
kVA	No Load (W)	Full load (W)
15	55	851
30	90	1313
45	116	1552
75	157	2204
112.5	217	2546
150	298	3388
225	423	4881
300	526	6066
500	795	8527
750	1132	11423

Standard AL 115C loss table		
kVA	No Load (W)	Full load (W)
15	325	985
30	480	1218
45	750	1835
75	956	2789
112.5	1448	3559
150	1727	4620
225	1950	6740
300	2760	7160
500	3830	9830
750	3980	16800

Appendix for ECM 11:
High Efficiency Transformers

II. Manufacturer Specification Sheets

This page is intentionally left blank.

E-Saver-C3™ The Green Transformer

APPLICATIONS

The E-Saver-C3 transformer is the ideal transformer for institutional and commercial environments where energy efficiency is a priority. Optimized for lowest life cycle cost, the E-Saver-C3 reduces waste by as much as 74%. The E-Saver-C3 is a practical and affordable solution for K-12, colleges and universities, healthcare, governments and commercial buildings where lowest life cycle cost and energy savings are a priority.

DESCRIPTION AND CHARACTERISTICS

The E-Saver-C3 sets new benchmarks for environmental protection, energy efficiency and reliability. Designed to provide the lowest life cycle cost, the E-Saver-C3 goes beyond US DOE Candidate Level 3 efficiency ensuring lower operating losses than standard off-the-shelf transformers. To provide superior performance and reduce environmental impact, the E-Saver-C3 comes with a superior Nomex based insulation system impregnated with an organic epoxy adhesive.

QUIET OPERATION

Workplace productivity can be compromised when noisy transformers are located close to people. To meet this challenge, the E-Saver-C3 has embedded structural and acoustic treatments that combine to ensure quiet-operation. To ensure quiet operation, noise tests are part of our ISO 9001 procedures for every transformer.

OPTIONAL INTEGRATED METERING

To facilitate on-site commissioning and monitoring, Powersmiths SMART meter can be integrated into the transformer. SMART is an energy and power meter that serves as a data acquisition system, providing on-going energy and power quality data for the building's energy management systems and education for sustainability software such as Powersmiths Windows on the World™ (WOW) education for sustainability system. An optional port is available to provide safe external access to live transformer primary and secondary voltages and currents; operating temperature and TVSS status, without opening the transformer enclosure.

OPTIONAL INFRARED VIEWING PORT

Powersmiths Rotatable IR (Infrared) Viewing Port enables safe, non-invasive thermographic imaging of live equipment without exposing maintenance personnel to electrical hazards, including Arc-Flash.

ENVIRONMENTAL BENEFIT

The E-Saver-C3 is built in an ISO 9001 (quality management) and ISO 14001 (environmental management) certified facility. Throughout the manufacturing process, Powersmiths takes steps to ensure that waste is eliminated and hazardous materials are avoided. Because Powersmiths transformers generate lower losses, they reduce power drawn from generating stations resulting in less smog and lower greenhouse gas emissions.

TESTING AND WARRANTY

E-Saver-C3 is subjected to rigorous testing to ensure: efficiency under various load profiles and loading conditions, quiet operation and insulation integrity and production-tests with actual computer-power loading in an ISO 9001 environment.

The E-Saver-C3's long life and dependable performance is backed up by Powersmiths' industry leading 25 year pro-rated warranty.

MAXIMIZE YOUR ENERGY SAVINGS

Matches Efficiency With Load Profile and Significantly Outperforms TP1

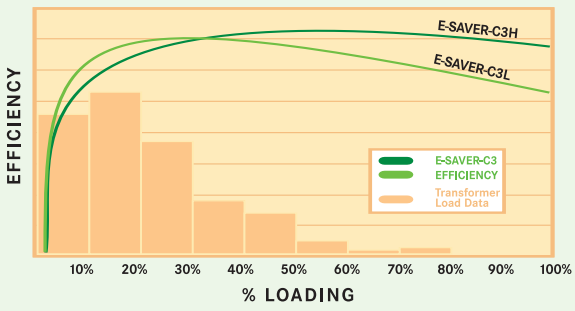

KEY FEATURES

- **Reduces electricity waste to help you meet your sustainability goals**
- **Optimized to provide quiet, efficient electrical power for improved productivity**
- **Significantly exceeds NEMA TP-1 efficiency for low operating cost over life of transformer**
- **Provides the lowest life cycle cost of any transformer on the market**
- **Produced in an ISO 9001 and ISO 14001 certified facility to ensure high quality and low environmental impact**

STANDARD CONFIGURATION

Powersmiths E-Saver-C3 is a 3-phase common-core, ventilated, dry type isolation transformer, built in an ISO 9001 and ISO14001 environment to NEMA ST-20 and other applicable ANSI and IEEE standards. Primary and secondary terminals and voltage taps are readily accessible by removing the front cover plate; 10kV BIL.

The E-Saver-C3 has a 220˚C class insulation, is rated for 60Hz, and comes in a NEMA 1 ventilated indoor enclosure. It exceeds the efficiency requirements of DOE candidate Standard Level 3 (CSL 3).

The E-Saver-C3L comes in two models optimized for light loading: copper-wound k-7 listed, and aluminum-wound k-4 listed. Both have a 130˚C temperature rise.

The E-Saver-C3H is optimized for heavy loading, is copper-wound, has a UL listed k-13 rating, and a 105˚C temperature rise. The C3H model has an 80˚C option with k-20 rating.

SELECT

kVA: Rating of unit (15-1000 kVA, up to 5000 kVA)
PV: Primary voltage (600, 480, 415, 400, 380, 208, up to 15kV)
SV: Secondary voltage (208/120V, 480/277V, 600/347V, others available)

SAMPLE PART NUMBER

E-SAVER-C3L-75-480-208

* FEDERAL REGISTER – US Department of Energy, Office of Energy Efficiency and Renewable Energy. 10 CFR Part 430, July 29, 2004. Energy Conservation Program for Commercial and Industrial Equipment: Energy Conservation Standards

TECHNICAL DATA

kVA	Impedance (%Z)	C3L Weight (lbs)	C3H Weight (lbs)	Case Size (Inches)
15	3.0 - 6.0%	200 - 250	210 - 260	A (18W x 17D x 27H)
30	3.0 - 6.0%	320 - 400	350 - 430	B (26W x 18D x 30H)
45	3.0 - 6.0%	400 - 500	420 - 520	B (26W x 18D x 30H)
75	3.0 - 6.0%	570 - 670	610 - 710	C (32W x 22D x 40H)
112.5	3.0 - 6.0%	850 - 950	880 - 1000	C (32W x 22D x 40H)
150	3.0 - 6.0%	1100 - 1300	1150 - 1350	D (38W x 27D x 48H)
225	3.0 - 6.0%	1550 - 1750	1700 - 1900	D+ (38W x 32D x 52H)
300	3.0 - 6.0%	1850 - 2050	1950 - 2150	D+ (38W x 32D x 52H)
500	3.0 - 6.0%	2500 - 2700	2900 - 3100	E+ (52W x 38D x 61H)
750	3.0 - 6.0%	3700 - 4300	4000 - 4400	F (64W x 47D x 67H)

The above data applies to configurations up to 600V, with NEMA 1enclosure and standard temperature rise. Selection of some options may change enclosure size and weight. Consult factory for detailed product data sheet for these and other configurations.
*Specific case used determined by factory unless specified. Special designs available to meet custom requirements.

AVAILABLE OPTIONS

SMART1: Integrated metering port

SMART2: Integrated Power & Energy Meter

SMART3: Integrated Meter with Web access

CYBERHAWK-TX: Efficiency & Power Meter

N3R: NEMA 3R, ventilated enclosure

T80: 80 deg. C operating Temp. rise (C3H model only)

F50: 50Hz design

1S: Single electrostatic shields

2S: Dual electrostatic shields

3S: Triple electrostatic shields

ECO: ECOLOGO certified

SPD: (120/208V OR 277/480V)
- **PRO80:** 80kA, 7 mode, Filter
- **PRO120:**120kA, 7 mode, Filter
- **PRO160:** 160kA, 7 mode, Filter
- **PRO200:** 200kA, 7 mode, Filter
- **PRO240:** 240kA, 7 mode, Filter

PROXX: Where xx is custom ID

LK: Lug kit, screw-type

COL: Color other than the factory standard

TSB: Terminal Safety Barrier

TS: Thermal Sensors at 170˚C and 200˚C

NLT: Nonlinear load test

SE: Sensitive Environment, extra low noise

A: Aluminum windings

WARRANTY: 25 years pro-rated.

Technical specification subject to change without notice.

Copyright 2009, Powersmiths International Corp. All rights reserved. E-Saver-C3™ and Windows on the World and WOW are trademarks of Powersmiths International Corp.

Printed on acid free, elemental chlorine free paper. Paper contains 50% recycled content including 25% post consumer waste.

POWERSMITHS

POWERSMITHS INTERNATIONAL CORP. 10 Devon Road, Brampton, Ontario L6T 5B5 Canada
Phone: (905) 791-1493 Toll-free: (800) 747-9627 Fax: (905) 791-8870 Email: info@powersmiths.com
www.powersmiths.com

807-000431-121-A03

www.powersmiths.com

Powersmiths International Corp.
10 Devon Rd.
Brampton, ON. L6T 5B5

Phone: 905 791 1493
Fax: 905 791 5159
Toll Free: 1 800 747 9627

Powersmiths Dry Type Transformers 600V and under Installation, Operation and Maintenance

Safety Instructions

Important Notice: *Retain these instructions for future reference. Failure to follow these instructions could result in serious injury or death. Powersmiths International accepts no liability from damages arising from handling, miss-installation or miss-application of this product.*

DANGER

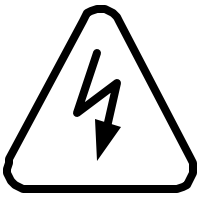

HAZARD OF ELECTRIC SHOCK OR ARC FLASH

This equipment to be installed and maintained only by qualified personnel

Use appropriate personal protective equipment (PPE) and follow safe electrical work practices (see NFPA 70E)

Before working on this equipment ensure that all power is off and locked out

Ensure all covers and doors are in a closed condition prior to applying power

FOR YOUR SAFETY: *IT IS IMPERATIVE THAT* ***POWER BE PROVEN DISCONNECTED*** *BEFORE ANY WORK ON OR PHYSICAL CONTACT TO ELECTRICAL CIRCUITS IS ATTEMPTED.*
DO NOT ASSUME *BUT* ***CHECK*** *ACROSS THE LINES AND TO GROUND WITH A SUITABLE METER AND ENSURE THAT THE SOURCE* ***DISCONNECTION DEVICES ARE SECURELY LOCKED*** *OUT*

Receiving and Handling

Inspection

Upon receipt of the equipment, immediately inspect for damage that may have occurred during transit. Any damage claims are to be filed with the carrier and reported to Powersmiths expeditiously.

Storage

Store Transformers in a dry and clean location protected from the elements if stored outside and also ensure that the ventilation openings remain covered to prevent the entry of dust. No special precautions are required for temperature extremes in the range of – 40 ^{O}C to + 70 ^{O}C.

Handling

CAUTION

Transformers can be very heavy with a relatively high center of gravity

Handle with care and move slowly to avoid tipping

Ensure that lifting devices evenly distribute the load over the base or lifting eyes

Powersmiths Transformers are shipped using Powersmiths “Easy Skid” (except core and coil units which are shipped on skids and equipped with lifting eyes) which is designed to minimize the use of shipping materials, maximize shipping efficiency and facilitate easy moving and safer installation.

The transformers are also equipped with lifting eyes to facilitate lifting with cable hooks. To access the lifting eyes for indoor type transformer enclosures, remove case covers and top, lifting eyes are attached to the top of the transformer bracket (illustrated opposite).

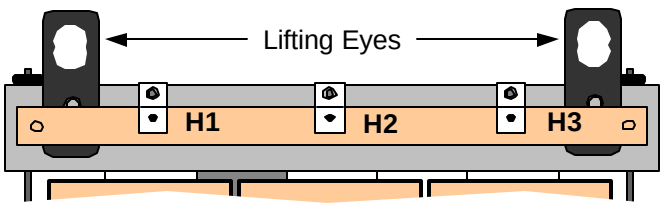

Installation

Transformer Installation Notes

The following notes are provided as a guide to installation of the transformer; for more indebt installation guidelines refer to ANSI/IEEE C57.94-2002 (Recommended Practice for Installation, Application, Operation and Maintenance of Dry-Type General Purpose Distribution and Power Transformers)

- Check that the nameplate ratings (Voltage/Power) of the Transformer matches the site requirements
- Requirement of 6 inches minimum between the ventilation openings and adjacent surfaces
- Front access space requirement for installation, inspection and service (re NEC)
- Mounting to a non-combustible floor only
- Wiring access availability through sides or bottom (see "Outline Dimensions and Wiring Access")
- Ventilation must be adequate to remove heat from room
- Environmental conditions – Temperature and Water (may require N3R option; shields and gasketing)
- N1000 units to be located at the source (non-linear loads) of the harmonics to be treated
- Transformers generate Audible noise which can propagate through walls

  Note: Where sound levels may be of concern (in close proximity to people), a low noise model (-SE) is recommended and/or utilize the services of a recognized acoustical consultant to provide the proper installation environment to minimize noise and vibration transmission

Moving and Mounting

- Locate the transformer in the desired location using a Pallet or Forklift truck and while still supported remove the protective wooden skids from the mounting base as illustrated below

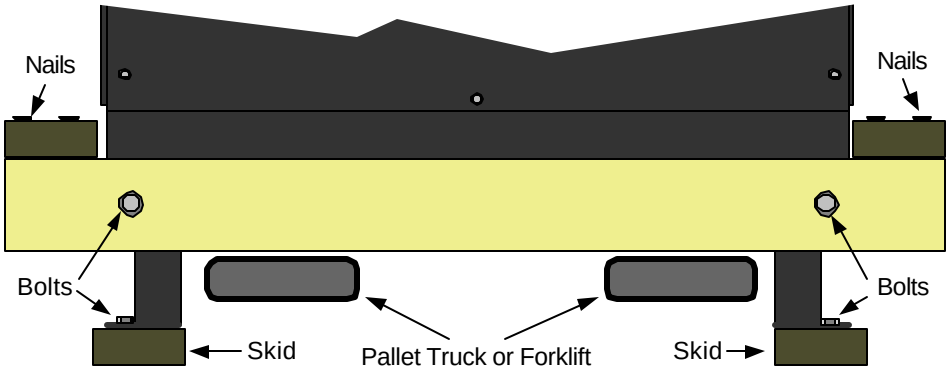

- To use internal lifting eyes, unbolt and remove Front/Rear covers and Top and attach lifting device to the lifting eyes attached to the top of the Transformer bracket
- Mark out and drill the mounting holes by which the Transformer will be secured
- Lower the Transformer onto the mounting area and secure to the floor
- Carefully remove the wooden side protective wooden skirts using a claw hammer and unbolt and remove the front and back protective wooden skirts (Note: Outdoor cabinets require inside access)
- Unbolt and remove (or open where hinged) the front and rear covers (if not already done)
- Locate the four Transformer mounting bolts and back off to finger tight, then retighten one full turn as illustrated

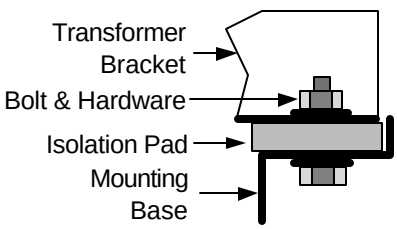

- Identify the applicable Terminal and Phasor diagram from the Nameplate and figures provided at the end of this bulletin; Input is labeled H* and Output X* (* indicates terminal number)
- Wire according to the relevant National Electric Code (NEC) or prevailing electrical code requirements with the following additional considerations:
  - Safety Grounding of the enclosure is mandatory (core internally bonded to case)
  - A Neutral to ground bond is mandatory either at the transformer or at distribution panel
  - Neutral wiring normally requires over-sizing for non-linear loading
    Note: All Powersmiths Transformers are equipped with a 200% rated neutral
  - Multi-output Secondaries must be protected to a maximum of 60% of the total load
  - For outdoor installations seal connections with an approved electrical joint compound
- N1000 Models are for local Harmonic treatment and are connected to the circuit by the X* terminals
  - Unit is to be protected by fuse or breaker to the listed Nameplate current rating
  - Neutral must be oversized to 200% of nominal current rating
- Lugs are not normally supplied for Transformers 112kVA and larger but may be ordered as a Lug Kit
- An Electrostatic shield (when supplied) is normally factory bonded to ground; additional shields are identified by S1 / S2 / S3 etc. for connection by the user to the desired grounding potential
- Torque all connections and check all internal bolted bus-bar connections for tightness
- Terminals are designed to support the weight of wires specific to its own connection
  Note: Do not allow wires from the other terminals to load adjacent ones (weight can be significant)

Startup and Operation

- Check connections for tightness, clearances and presence of loose strands
- Close/install all covers/doors and install external optional hardware (eg. rain shields) prior to energizing
- Energize and check output voltages and phase rotation at the downstream distribution point
- Should Voltage adjustment be required follow Tap adjustment procedure
- No operator input is required for normal operation but refer to section on Maintenance

Tap Adjustment Procedure

Taps are used to adjust for the average available input voltage or to 'tweak' the output voltage (e.g. adjust for cable voltage drops). Transformers are normally supplied with two 2½ % Taps above nominal (2 x 2½ % FCAN) and two 2½ % Taps below (2 x 2½ % FCBN) and factory set at the nominal setting. The Tap adjustment procedure is as follows using 480V input by way of illustration:

DANGER

See safety Instructions

Single Phase

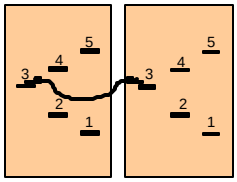

Tap	Link
504	1 - 1
492	2 - 2
480	3 - 3
468	4 - 4
456	5 - 5

Three Phase

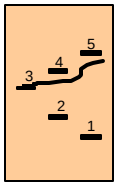

Tap	Link
504	1
492	2
480	3
468	4
456	5

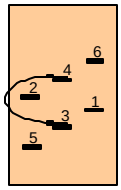

Tap	Link
504	1 - 2
492	2 - 3
480	3 - 4
468	4 - 5
456	5 - 6

To adjust for:

▪ Higher Input voltage	Unbolt Tap and reconnect to a higher voltage output setting
▪ Lower Input voltage	Unbolt Tap and reconnect to a lower voltage output setting
▪ Reduce output voltage	Unbolt Tap and reconnect to the next higher voltage setting
▪ Increase output voltage	Unbolt Tap and reconnect to the next lower voltage setting

Note: Refer to Transformer Nameplate for specific Voltage and Tap configurations as some models are equipped with two 5% taps and others six 2 ½% taps or more

Options

Please refer to the specific equipment bulletin/manual for more complete information on the listed options.

Thermal Sensors

Thermal sensors (when supplied) are wired and mounted to the upper Transformer bracket and are for user connection.

Electrical Rating is 1amp @ 250VAC or 24VDC max.

Wiring must be rated for the Transformer voltages and it is recommended that it be separately run from the power wires to avoid interference

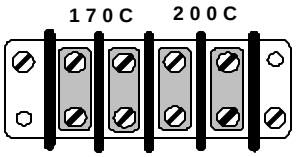

Smart-1 Package

The SMART-1 option provides a convenient externally accessible metering access Port, which facilitates for quick and accurate system Commissioning, Maintenance, Power, Power quality and Efficiency measurements. It is a factory-installed option mounted on the top right of the transformer cabinet and integrates fused voltage terminals and precision Cts with shunt switches and open-circuit CT protection.

Cyberhawk-TX

The *Cyberhawk -TX* option is an energy and power quality monitor, which is integrated with Powersmiths Transformers (mounted on the top right corner of the cabinet). It measures electrical parameters (V, I, THD, kW, kWh, kVA, VAR, PF, SH, etc.) and provides date stamped event recording of deviations from user set points, including Sags and Swells. It also directly measures the efficiency of the Transformer under real world operating conditions. Communication options include an integral server gateway (ISG), which facilitates remote access to the data coupled with email notifications of critical alarms.

Maintenance

Transformers require periodic attention and maintenance in order to ensure trouble-free service. An annual maintenance regime is normally adequate but should be more frequent for adverse environmental conditions (eg. airborne contaminants, etc.). Following is a suggested maintenance regime;:

Maintenance Schedule	Procedure
Monthly	Check that the air intakes at the bottom and sides are not obstructed by foreign objects
Bi-annual	Check for external dust buildup and if significant schedule an annual maintenance procedure as soon as convenient
Annual **DANGER** ***See safety precautions***	Power checks (at the down stream distribution panel): - Check that loading is in correct range for the transformer - Check load balance per phase and redistribute loading if possible Visual Checks: De-energize transformer and remove covers, then: - Vacuum or blow off (dry compressed air) any excessive dust buildup from windings, terminals and core - Check for signs of discoloration on the coils and terminals (overheating) - Check that connections are tight and re-torque as required - Check for traces of carbonization on coils (ionization)

Note: For more in-depth recommendations refer to ANSI/IEEE C57.94-2002 (Recommended Practice for Installation, Application, Operation and Maintenance of Dry-Type General Purpose Distribution and Power Transformers)

Connection and Phasor Diagrams

E-Saver & HC-ISO

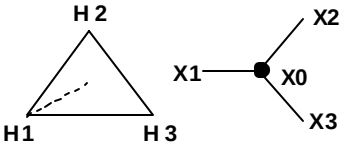

K-Star & T1000-0 (& 15 Deg.)

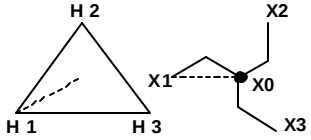

T1000-30 (30 deg.)

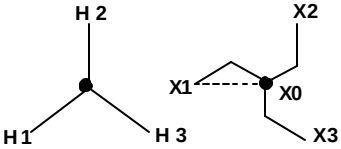

T1000-45 (45 deg.)

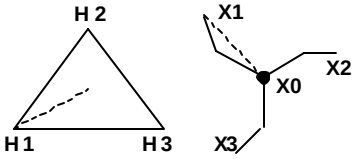

K-Star-D & T2000 (15/45 deg)

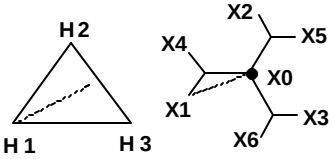

K-Star-D-Conf3 & T3000

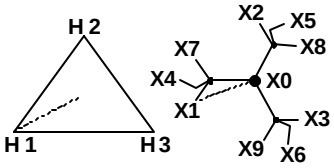

Delta-Delta (all models)

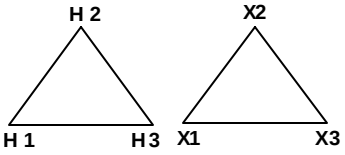

HC-AUTO

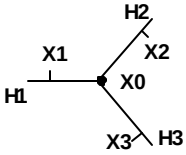

HI-LEG (all models)

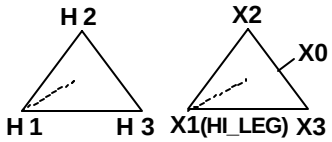

Single Phase (all models)

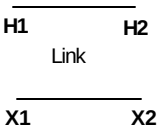

Single Split Phase (all models)

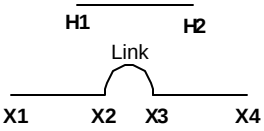

N1000

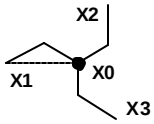

Note: These are typical Phasor diagrams for the Powersmiths line of Transformers; however please refer to the Transformer Nameplate to identify the specific applicable Phasor diagram

Outline Dimensions and Wiring Access

	A-Case	B-Case	C-Case	C-Plus	D-Case	D-Plus	E-Case	E-Plus	F-Case
A	17.4	25.4	31.4	31.4	37.4	37.4	51.4	51.4	63.4
B	16.8	17.8	21.5	22.5	26.5	31.5	31.5	37.5	44.5
C	27.1	29.9	39.9	39.9	47.6	51.6	60.6	60.6	66.6
D	24.3	25.3	29.3	33.3	34.3	39.3	39.3	45.3	52.3
E+	9	9	16	16	21	24	28	30	36
F	11	11	11	11	11	13	14	14	14
G+	4	6	6	6	7	8	9	10	11
H	3	3	3	3	3	5	5	5	6
J*	1	1	1	1	1	1	1	1	1
K	5.5	5.5	5.5	5.5	5.5	5.5	5.5	5.5	5.5

Notes:
- *All dimensions in inches*
- *'A' dimension is width (not illustrated)*
- ** is Minimum & + is maximum recommended*
- *'D' dimension only with rain-shields installed*
- *Wiring permissible through bottom grille which is at height K-1.0 inches from footing*

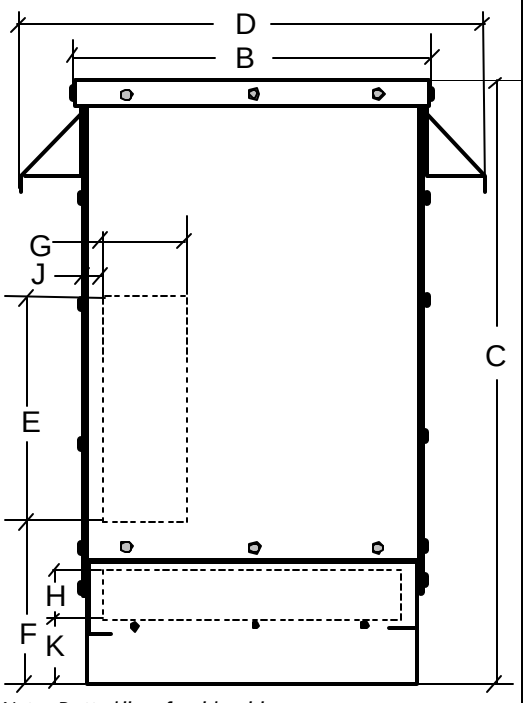

Note: Dotted lines for side wiring access area; Bottom wiring access permissible (not shown)

Terminal Layouts

Single Phase ≤ 167kVA

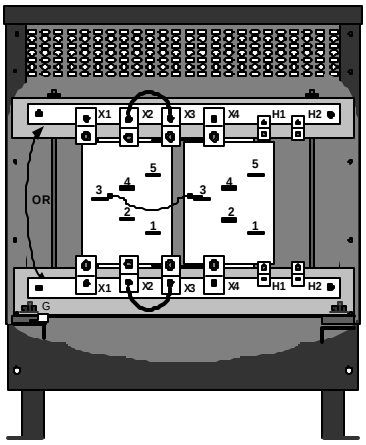

Three Phase ≤ 75kVA

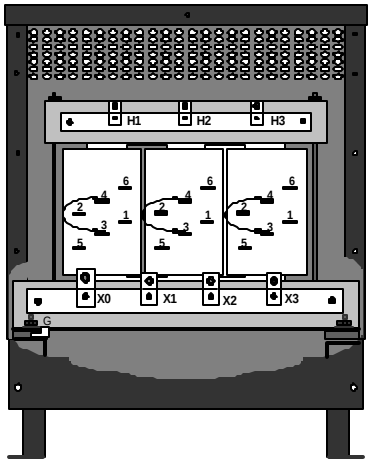

Three Phase 112 – 150kVA

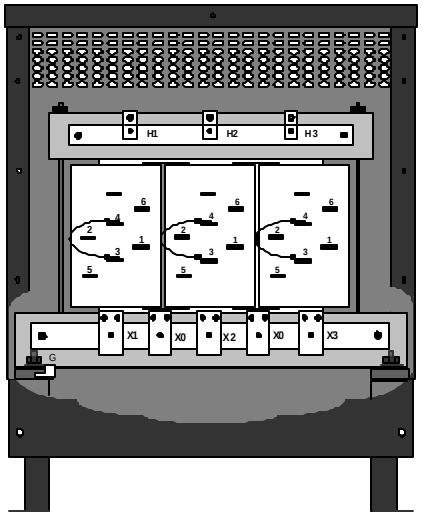

Three Phase ≥ 225kVA

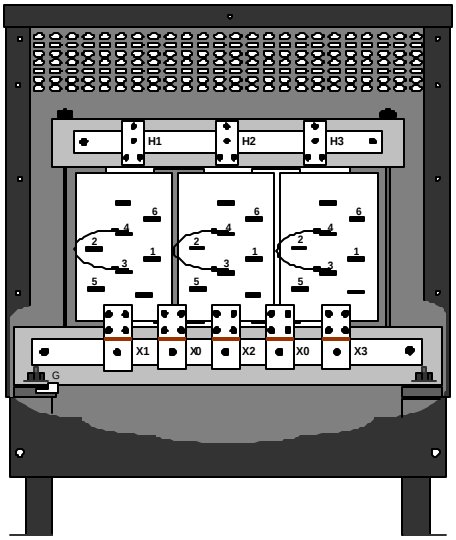

N1000

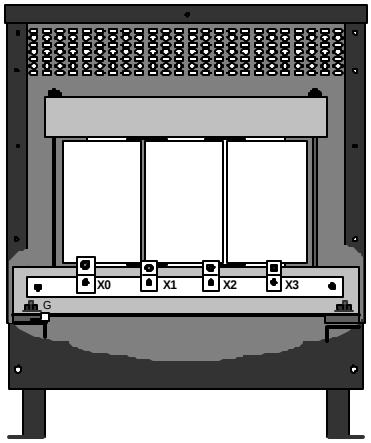

Three Phase Dual Output

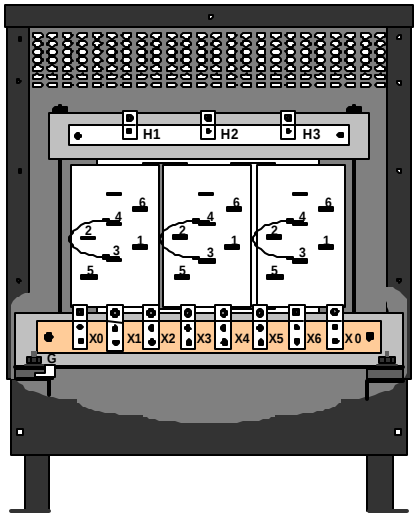

Three Phase Triple Output

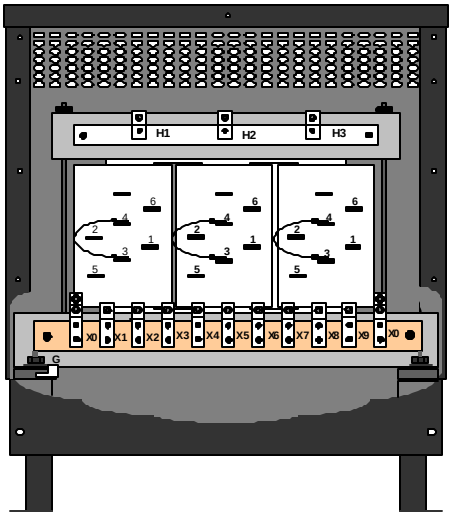

ECM 12:
Replace Boilers

ECM Overview

Ameresco proposes to replace thirteen existing hot water boilers located at the following schools, Dye ES, Kennedy ES, Ryerson ES, Terhune ES, Washington MS, and Wayne Hills HS with thirteen new condensing boilers to provide the Wayne Public School District (District) with new equipment and redundancy that will save energy and lower operating and maintenance costs.

Figure 12.1: Existing Boilers to be replaced at Kennedy ES

ECM Detail

Existing System

Boilers in schools listed below provide hot water for space heating in each of the schools. Boilers age varies but on average the boilers are about 46 years old.

	Existing Boilers	Qty.	Manufacture Date	Rating
Theunis Dey-ES	Cleaver Brooks	2	1963	2,511
John F. Kennedy-ES	Cleaver Brooks	2	1964	2,092
Ryerson- ES	Cleaver Brooks	2	1967	5,230
Terhune- ES	Cleaver Brooks	2	1965	2,092
Washington-MS	Cleaver Brooks	2	1967	6,275
Wayne Hills-HS	Cleaver Brooks	3	1965	8,375

Table 12 .1: Existing Boilers Information

Proposed System

Ameresco proposes to remove boilers listed above and install new boilers manufactured by Aerco, model Aerco-BMK (or equal) . The new boilers will be rated to meet school's design load demands. The new boilers will tie into the existing hot water supply and return headers. The new boilers will provide the district with new high efficiency boilers and provide reliable redundancy in the event of a boiler failure.

"Page content is subject to Confidentiality Restrictions"

Boiler information		
Theunis Dey-ES	Aerco-BMK 1.5	Hot Water
Theunis Dey-ES	Aerco-BMK 1.5	Hot Water
John F. Kennedy-ES	Aerco-BMK 1.5	Hot Water
John F. Kennedy-ES	Aerco-BMK 1.5	Hot Water
Ryerson- ES	Aerco-BMK 1.5	Hot Water
Ryerson- ES	Aerco-BMK 1.5	Hot Water
Terhune- ES	Aerco-BMK 1.5	Hot Water
Terhune- ES	Aerco-BMK 1.5	Hot Water
Washington-MS	Aerco-BMK 3,000	Hot Water
Washington-MS	Aerco-BMK 3,000	Hot Water
Wayne Hills-HS	Aerco-BMK 6,000	Hot Water
Wayne Hills-HS	Aerco-BMK 6,000	Hot Water
Wayne Hills-HS	Aerco-BMK 6,000	Hot Water

Table 12.2: New Boilers Information

Existing boilers are to be demolished and removed. New boilers are to be installed per the following scope of work.

- New boiler to come with controls
- Demo and remove existing boilers
  - Disconnect existing electric services and ready for new boilers
  - Disconnect existing #2 oil fuel lines and/or natural gas and ready for new boiler
  - Disconnect existing hot water supply and return piping
    - Isolate building loops and drain near boiler piping
    - Demo and remove all existing boiler loop piping back to first shut-off valve (valve to remain) from main header
- Install new boilers.
  - Install new boilers breaching and combustion air manifolds.
    - provide all power and control wiring
    - Reuse existing headers
    - Connect new boilers to existing hot water headers.
    - Provide and install all isolation valves, check valves, pressure gauges, temperature probes, etc. to complete the new piping
    - New piping to be welded schedule 40 steel.
    - Insulate and label all new hot water piping
    - Insulate any bare hot water piping located in the boiler room
- Startup and tuning to be provided by boiler manufacturer
- Provide one year parts and labor warranty on all components.
- Exclusion
  - Ameresco excludes from its scope any code upgrade to the physical boiler or fire protection systems.

"Page content is subject to Confidentiality Restrictions"

- Ameresco excludes repairs to existing infrastructure such as existing hot water and auxiliary piping beyond the first header isolation valve, excludes header isolation valve replacement.

Sizing Considerations

New boiler plants will be sized according to historical weather data, ASHRAE guidelines and input from District personnel. Ameresco believes that reduced capacity boilers can be installed to maintain comfort levels while conserving space in the mechanical equipment room that would allow for better maintenance.

Equipment, Design and Construction Documentation

Equipment will be identified in submittals provided to District for approval prior to procurement. Documents will be submitted to the engineering maintenance department, for their review and comment. Upon approval, these will constitute the construction documents. Upon completion of the construction phase, the documents will be revised as needed to reflect "As-Built" conditions, and submitted in multiple to District for record.

Impact on Facility Operations and Performance

The new boiler and burners will enhance facility operations by providing new reliable equipment that will last well into the future. Maintenance cost reductions will occur due to new more efficient equipment.

"Page content is subject to Confidentiality Restrictions"

This page is intentionally left blank.

Appendix for ECM 12: Replace Boilers

I. Energy Savings Calculations

"Page content is subject to Confidentiality Restrictions"

This page is intentionally left blank.

Project Template	
Energy and Demand Savings Summary	
Measure ID:	**12**
Measure Name:	**Replace Boilers**
Measure Location:	
Engineers:	

Site Name:		**Dey ES**	**Kennedy ES**	**Ryerson ES**	**Terhune ES**	**Washington MS**	**Wayne Hills HS**	**Summary**
Item	Units	Savings	Savings	Savings	Savings	Savings	Savings	
Electricity								
Energy On-Peak	kWh							0
Energy Off-Peak	kWh							0
Energy Total	kWh	0	0	0	0	0	0	0
Demand On-Peak, Monthly	kW							0.0
Demand On-Peak, Annual	kW							0.0
Demand Off-Peak, Monthly	kW							0.0
Demand Off-Peak, Annual	kW							0.0
Fossil Fuel								0
Natural Gas (NG)	Therms	1,586	1,967	2,318	1,970	3,958	11,198	22,998
Liquid Propane Gas (LPG)	Gallons							0
Steam	Mlbs							0
Fuel Oil, #2	Gallons							0
Fuel Oil, #4	Gallons							0
Fuel Oil, #6	Gallons							0
Miscellaneous	Misc							0
Water								0
Water Savings	kGallons							0
Sewer								0
Sewer Savings	kGallons							0

Project Template
Theunis Dey-Elementary School
Replace Boilers

TMY-2 Weather Data for Newark, NJ								Existing Occupancy Schedule				Proposed EMS Operating Hours								Proposed		Savings
Amb. Temp Bin deg. F	Ave Temp deg. F	M.C.W.B deg. F	M.C. Enthalpy Btu/lbma	01-08 Hours	09-16 Hours	17-24 Hours	Total Bin Hours	Occ On-Peak Hrs.	UnOcc On-Peak Hrs.	Occ Off-Peak Hrs.	UnOcc Off-Peak Hrs.	Occ On-Peak Hrs.	UnOcc On-Peak Hrs.	Occ Off-Peak Hrs.	UnOcc Off-Peak Hrs.	Interacted Occ. Heat Load (MBH)	Interacted UnOcc. Heat Load (MBH)	Occ. Heat Usage (MMBTU)	UnOcc. Heat Usage (MMBTU)	Occ Cooling/Heating Energy Consump. (MMBTU)	UnOcc Cooling/Heating Energy Consump. (MMBTU)	Heating Energy Savings (MMBTU)
A	**B**	**C**	**D**	**E**	**F**	**G**	**H**	**I**	**J**	**K**	**L**	**M**	**N**	**O**	**P**	**Q**	**R**	**S**	**T**	**U**	**V**	**W**
Cooling																						
105 to 110	107.5	0.0	0.0	0	0	0	0	0	0	0	0	0	0	0	0							
100 to 105	102.5	0.0	0.0	0	0	0	0	0	0	0	0	0	0	0	0							
95 to 100	97.5	72.2	35.7	0	5	1	6	1	1	0	4	1	1	0	4							
90 to 95	92.5	73.8	37.3	0	33	7	40	8	8	0	24	8	8	0	24							
85 to 90	87.5	71.3	35.1	0	92	30	122	25	25	0	73	25	25	0	73							
80 to 85	82.5	69.2	33.2	8	330	162	500	100	102	0	298	100	102	0	298							
75 to 80	77.5	67.4	31.8	98	257	265	620	125	126	0	369	125	126	0	369							
70 to 75	72.5	64.6	29.7	325	236	286	847	170	173	0	504	170	173	0	504							
65 to 70	67.5	60.9	27.0	251	204	216	671	135	137	0	399	135	137	0	399							
60 to 65	62.5	56.3	24.0	358	268	301	927	186	189	0	552	186	189	0	552							
Heating																						
55 to 60	57.5	50.3	20.4	217	191	192	600	121	122	0	357	121	122	0	357	(265)	0	0	0	0	0	0
50 to 55	52.5	46.4	18.3	218	223	289	730	147	149	0	435	147	149	0	435	(370)	(46)	9	10	8	9	2
45 to 50	47.5	41.8	16.0	243	196	195	634	127	129	0	377	127	129	0	377	(476)	(138)	25	68	22	62	9
40 to 45	42.5	38.0	14.3	193	171	149	513	103	105	0	305	103	105	0	305	(582)	(230)	34	104	31	93	14
35 to 40	37.5	33.9	12.5	357	311	355	1,023	206	209	0	609	206	209	0	609	(688)	(322)	96	303	86	273	39
30 to 35	32.5	29.3	10.6	277	221	236	734	147	150	0	437	147	150	0	437	(794)	(413)	89	287	80	258	37
25 to 30	27.5	24.3	8.7	159	98	134	391	79	80	0	233	79	80	0	233	(900)	(505)	58	189	52	171	24
20 to 25	22.5	19.3	6.8	89	48	58	195	39	40	0	116	39	40	0	116	(1,006)	(597)	34	113	31	102	14
15 to 20	17.5	14.8	5.3	74	20	31	125	25	25	0	74	25	25	0	74	(1,111)	(689)	25	84	23	76	11
10 to 15	12.5	10.0	3.8	35	7	5	47	9	10	0	28	9	10	0	28	(1,217)	(781)	11	36	10	33	5
5 to 10	7.5	5.1	2.3	17	9	8	34	7	7	0	20	7	7	0	20	(1,323)	(873)	9	29	8	26	4
0 to 5	2.5	0.6	1.0	1	0	0	1	0	0	0	1	0	0	0	1	(1,429)	(965)	0	1	0	1	0
-5 to 0	(2.5)	0.0	0.0	0	0	0	0	0	0	0	0	0	0	0	0	(1,535)	(1,057)	0	0	0	0	0
-10 to -5	(7.5)	0.0	0.0	0	0	0	0	0	0	0	0	0	0	0	0	(1,641)	(1,149)	0	0	0	0	0
-15 to -10	(12.5)	0.0	0.0	0	0	0	0	0	0	0	0	0	0	0	0	(1,747)	(1,240)	0	0	0	0	0
-20 to -15	(17.5)	0.0	0.0	0	0	0	0	0	0	0	0	0	0	0	0	(1,852)	(1,332)	0	0	0	0	0
-25 to -20	(22.5)	0.0	0.0	0	0	0	0	0	0	0	0	0	0	0	0	(1,958)	(1,424)	0	0	0	0	0
				2,920	2,920	2,920	8,760	1,760	1,786	0	5,214	1,760	1,786	0	5,214			390	1,224	351	1,104	159

Cell Ref.	Comment
A-H	TMY-2 Weather Data for Newark, NJ
I - L	Occupied hours as per the RFP data
M - P	Equipment operating hours after EMS is installed
Q	Interacted Occupied Heating loads (MBH)
R	Interacted Unoccupied Heating loads (MBH)
S	Heating = -(MIN([col I] + [col K],[col M] + [col O]) x MIN([col Q] + internal gains,0) + IF([col I] + [col K] > [col M] + [col O],(([col I] + [col K]) - ([col M] + [col O])) x MIN([col R] + internal gains,0),0)) ÷ 1,000 ÷ R43
T	Heating = -((([col N] + [col P]) x MIN([col R] + internal gains,0) + IF([col I] + [col K] < [col M] + [col O],(([col M] + [col O]) - ([col I] + [col K])) x MIN([col Q] + internal gains,0),0)) ÷ 1,000 ÷ R43
U	Heating = -(MIN([col I] + [col K],[col M] + [col O]) x MIN([col Q] + internal gains,0) + IF([col I] + [col K] > [col M] + [col O],(([col I] + [col K]) - ([col M] + [col O])) x MIN([col R] + internal gains,0),0)) ÷ 1,000 ÷ R44
V	Heating = -((([col N] + [col P]) x MIN([col R] + internal gains,0) + IF([col I] + [col K] < [col M] + [col O],(([col M] + [col O]) - ([col I] + [col K])) x MIN([col Q] + internal gains,0),0)) ÷ 1,000 ÷ R44
W	= [col S] + [col T] - [col U] - [col V]

Assumptions:	Value	Unit	CELL	Description
			REF	
Existing Heating Plant Efficiency	78.0%		R43	Baseline Boiler Efficiency
Proposed Heating Plant Efficiency	86.5%		R44	Proposed Boiler Efficiency

Project Template
John F. Kennedy-Elementary School
Replace Boilers

TMY-2 Weather Data for Newark, NJ								Existing Occupancy Schedule				Proposed EMS Operating Hours								Proposed		Savings
Amb. Temp Bin deg. F	Ave Temp deg. F	M.C.W.B deg. F	M.C. Enthalpy Btu/lbma	01-08 Hours	09-16 Hours	17-24 Hours	Total Bin Hours	Occ On-Peak Hrs.	UnOcc On-Peak Hrs.	Occ Off-Peak Hrs.	UnOcc Off-Peak Hrs.	Occ On-Peak Hrs.	UnOcc On-Peak Hrs.	Occ Off-Peak Hrs.	UnOcc Off-Peak Hrs.	Interacted Occ. Heat Load (MBH)	Interacted UnOcc. Heat Load (MBH)	Occ. Heat Usage (MMBTU)	UnOcc. Heat Usage (MMBTU)	Occ Cooling/Heating Energy Consump. (MMBTU)	UnOcc Cooling/Heating Energy Consump. (MMBTU)	Heating Energy Savings (MMBTU)
A	**B**	**C**	**D**	**E**	**F**	**G**	**H**	**I**	**J**	**K**	**L**	**M**	**N**	**O**	**P**	**Q**	**R**	**S**	**T**	**U**	**V**	**W**
Cooling																						
105 to 110	107.5	0.0	0.0	0	0	0	0	0	0	0	0	0	0	0	0							
100 to 105	102.5	0.0	0.0	0	0	0	0	0	0	0	0	0	0	0	0							
95 to 100	97.5	72.2	35.7	0	5	1	6	1	1	0	4	1	1	0	4							
90 to 95	92.5	73.8	37.3	0	33	7	40	8	8	0	24	8	8	0	24							
85 to 90	87.5	71.3	35.1	0	92	30	122	25	25	0	73	25	25	0	73							
80 to 85	82.5	69.2	33.2	8	330	162	500	100	102	0	298	100	102	0	298							
75 to 80	77.5	67.4	31.8	98	257	265	620	125	126	0	369	125	126	0	369							
70 to 75	72.5	64.6	29.7	325	236	286	847	170	173	0	504	170	173	0	504							
65 to 70	67.5	60.9	27.0	251	204	216	671	135	137	0	399	135	137	0	399							
60 to 65	62.5	56.3	24.0	358	268	301	927	186	189	0	552	186	189	0	552							
Heating																						
55 to 60	57.5	50.3	20.4	217	191	192	600	121	122	0	357	121	122	0	357	(338)	0	0	0	0	0	0
50 to 55	52.5	46.4	18.3	218	223	289	730	147	149	0	435	147	149	0	435	(446)	(46)	6	4	5	3	1
45 to 50	47.5	41.8	16.0	243	196	195	634	127	129	0	377	127	129	0	377	(555)	(139)	23	65	21	57	11
40 to 45	42.5	38.0	14.3	193	171	149	513	103	105	0	305	103	105	0	305	(664)	(232)	34	103	30	90	17
35 to 40	37.5	33.9	12.5	357	311	355	1,023	206	209	0	609	206	209	0	609	(773)	(325)	97	305	85	268	49
30 to 35	32.5	29.3	10.6	277	221	236	734	147	150	0	437	147	150	0	437	(882)	(418)	90	290	79	255	46
25 to 30	27.5	24.3	8.7	159	98	134	391	79	80	0	233	79	80	0	233	(991)	(511)	59	193	52	169	31
20 to 25	22.5	19.3	6.8	89	48	58	195	39	40	0	116	39	40	0	116	(1,100)	(604)	35	115	31	101	18
15 to 20	17.5	14.8	5.3	74	20	31	125	25	25	0	74	25	25	0	74	(1,209)	(697)	26	86	23	76	14
10 to 15	12.5	10.0	3.8	35	7	5	47	9	10	0	28	9	10	0	28	(1,318)	(789)	11	37	10	32	6
5 to 10	7.5	5.1	2.3	17	9	8	34	7	7	0	20	7	7	0	20	(1,426)	(882)	9	30	8	26	5
0 to 5	2.5	0.6	1.0	1	0	0	1	0	0	0	1	0	0	0	1	(1,535)	(975)	0	1	0	1	0
-5 to 0	(2.5)	0.0	0.0	0	0	0	0	0	0	0	0	0	0	0	0	(1,644)	(1,068)	0	0	0	0	0
-10 to -5	(7.5)	0.0	0.0	0	0	0	0	0	0	0	0	0	0	0	0	(1,753)	(1,161)	0	0	0	0	0
-15 to -10	(12.5)	0.0	0.0	0	0	0	0	0	0	0	0	0	0	0	0	(1,862)	(1,254)	0	0	0	0	0
-20 to -15	(17.5)	0.0	0.0	0	0	0	0	0	0	0	0	0	0	0	0	(1,971)	(1,347)	0	0	0	0	0
-25 to -20	(22.5)	0.0	0.0	0	0	0	0	0	0	0	0	0	0	0	0	(2,080)	(1,439)	0	0	0	0	0
				2,920	2,920	2,920	8,760	1,760	1,786	0	5,214	1,760	1,786	0	5,214			392	1,229	344	1,080	197

Cell Ref.	Comment
A-H	TMY-2 Weather Data for Newark, NJ
I - L	Occupied hours as per the RFP data
M - P	Equipment operating hours after EMS is installed
Q	Interacted Occupied Heating loads (MBH)
R	Interacted Unoccupied Heating loads (MBH)
S	Heating = -(MIN([col I] + [col K],[col M] + [col O]) x MIN([col Q] + internal gains,0) + IF([col I] + [col K] > [col M] + [col O],(([col I] + [col K]) - ([col M] + [col O])) x MIN([col R] + internal gains,0),0)) ÷ 1,000 ÷ R43
T	Heating = -(((col N] + [col P]) x MIN([col R] + internal gains,0) + IF([col I] + [col K] < [col M] + [col O],(([col M] + [col O]) - ([col I] + [col K])) x MIN([col Q] + internal gains,0),0)) ÷ 1,000 ÷ R43
U	Heating = -(MIN([col I] + [col K],[col M] + [col O]) x MIN([col Q] + internal gains,0) + IF([col I] + [col K] > [col M] + [col O],(([col I] + [col K]) - ([col M] + [col O])) x MIN([col R] + internal gains,0),0)) ÷ 1,000 ÷ R44
V	Heating = -(((col N] + [col P]) x MIN([col R] + internal gains,0) + IF([col I] + [col K] < [col M] + [col O],(([col M] + [col O]) - ([col I] + [col K])) x MIN([col Q] + internal gains,0),0)) ÷ 1,000 ÷ R44
W	= [col S] + [col T] - [col U] - [col V]

Assumptions:	Value	Unit	CELL	Description
			REF	
Existing Heating Plant Efficiency	76.0%		R43	Baseline Boiler Efficiency
Proposed Heating Plant Efficiency	86.5%		R44	Proposed Boiler Efficiency

Project Template
Ryerson-Elementary School
Replace Boilers

TMY-2 Weather Data for Newark, NJ								Existing Occupancy Schedule				Proposed EMS Operating Hours								Proposed		Savings
Amb. Temp Bin deg. F	Ave Temp deg. F	M.C.W.B deg. F	M.C. Enthalpy Btu/lbma	01-08 Hours	09-16 Hours	17-24 Hours	Total Bin Hours	Occ On-Peak Hrs.	UnOcc On-Peak Hrs.	Occ Off-Peak Hrs.	UnOcc Off-Peak Hrs.	Occ On-Peak Hrs.	UnOcc On-Peak Hrs.	Occ Off-Peak Hrs.	UnOcc Off-Peak Hrs.	Interacted Occ. Heat Load (MBH)	Interacted UnOcc. Heat Load (MBH)	Occ. Heat Usage (MMBTU)	UnOcc. Heat Usage (MMBTU)	Occ Cooling/Heating Energy Consump. (MMBTU)	UnOcc Cooling/Heating Energy Consump. (MMBTU)	Heating Energy Savings (MMBTU)
A	**B**	**C**	**D**	**E**	**F**	**G**	**H**	**I**	**J**	**K**	**L**	**M**	**N**	**O**	**P**	**Q**	**R**	**S**	**T**	**U**	**V**	**W**
Cooling																						
105 to 110	107.5	0.0	0.0	0	0	0	0	0	0	0	0	0	0	0	0							
100 to 105	102.5	0.0	0.0	0	0	0	0	0	0	0	0	0	0	0	0							
95 to 100	97.5	72.2	35.7	0	5	1	6	1	1	0	4	1	1	0	4							
90 to 95	92.5	73.8	37.3	0	33	7	40	9	7	0	24	9	7	0	24							
85 to 90	87.5	71.3	35.1	0	92	30	122	29	21	0	73	29	21	0	73							
80 to 85	82.5	69.2	33.2	8	330	162	500	117	85	0	298	117	85	0	298							
75 to 80	77.5	67.4	31.8	98	257	265	620	145	106	0	369	145	106	0	369							
70 to 75	72.5	64.6	29.7	325	236	286	847	199	144	0	504	199	144	0	504							
65 to 70	67.5	60.9	27.0	251	204	216	671	157	114	0	399	157	114	0	399							
60 to 65	62.5	56.3	24.0	358	268	301	927	217	158	0	552	217	158	0	552							
Heating																						
55 to 60	57.5	50.3	20.4	217	191	192	600	141	102	0	357	141	102	0	357	(368)	0	2	0	1	0	0
50 to 55	52.5	46.4	18.3	218	223	289	730	171	124	0	435	171	124	0	435	(495)	(48)	31	9	27	8	5
45 to 50	47.5	41.8	16.0	243	196	195	634	149	108	0	377	149	108	0	377	(622)	(143)	51	68	45	60	15
40 to 45	42.5	38.0	14.3	193	171	149	513	120	87	0	305	120	87	0	305	(749)	(238)	62	105	54	92	20
35 to 40	37.5	33.9	12.5	357	311	355	1,023	240	174	0	609	240	174	0	609	(876)	(334)	163	307	143	270	57
30 to 35	32.5	29.3	10.6	277	221	236	734	172	125	0	437	172	125	0	437	(1,003)	(429)	146	291	128	255	53
25 to 30	27.5	24.3	8.7	159	98	134	391	92	67	0	233	92	67	0	233	(1,130)	(524)	93	192	82	169	35
20 to 25	22.5	19.3	6.8	89	48	58	195	46	33	0	116	46	33	0	116	(1,257)	(620)	54	115	47	101	20
15 to 20	17.5	14.8	5.3	74	20	31	125	29	21	0	74	29	21	0	74	(1,384)	(715)	39	85	35	75	15
10 to 15	12.5	10.0	3.8	35	7	5	47	11	8	0	28	11	8	0	28	(1,510)	(810)	17	37	15	32	6
5 to 10	7.5	5.1	2.3	17	9	8	34	8	6	0	20	8	6	0	20	(1,637)	(905)	13	30	12	26	5
0 to 5	2.5	0.6	1.0	1	0	0	1	0	0	0	1	0	0	0	1	(1,764)	(1,001)	0	1	0	1	0
-5 to 0	(2.5)	0.0	0.0	0	0	0	0	0	0	0	0	0	0	0	0	(1,891)	(1,096)	0	0	0	0	0
-10 to -5	(7.5)	0.0	0.0	0	0	0	0	0	0	0	0	0	0	0	0	(2,018)	(1,191)	0	0	0	0	0
-15 to -10	(12.5)	0.0	0.0	0	0	0	0	0	0	0	0	0	0	0	0	(2,145)	(1,287)	0	0	0	0	0
-20 to -15	(17.5)	0.0	0.0	0	0	0	0	0	0	0	0	0	0	0	0	(2,272)	(1,382)	0	0	0	0	0
-25 to -20	(22.5)	0.0	0.0	0	0	0	0	0	0	0	0	0	0	0	0	(2,399)	(1,477)	0	0	0	0	0
				2,920	2,920	2,920	8,760	2,053	1,493	0	5,214	2,053	1,493	0	5,214			671	1,239	589	1,088	232

Cell Ref.	Comment
A-H	TMY-2 Weather Data for Newark, NJ
I - L	Occupied hours as per the RFP data
M - P	Equipment operating hours after EMS is installed
Q	Interacted Occupied Heating loads (MBH)
R	Interacted Unoccupied Heating loads (MBH)
S	Heating = -(MIN([col I] + [col K],[col M] + [col O]) x MIN([col Q] + internal gains,0) + IF([col I] + [col K] > [col M] + [col O],(([col I] + [col K]) - ([col M] + [col O])) x MIN([col R] + internal gains,0),0)) ÷ 1,000 ÷ R43
T	Heating = -((([col N] + [col P]) x MIN([col R] + internal gains,0) + IF([col I] + [col K] < [col M] + [col O],(([col M] + [col O]) - ([col I] + [col K])) x MIN([col Q] + internal gains,0),0)) ÷ 1,000 ÷ R43
U	Heating = -(MIN([col I] + [col K],[col M] + [col O]) x MIN([col Q] + internal gains,0) + IF([col I] + [col K] > [col M] + [col O],(([col I] + [col K]) - ([col M] + [col O])) x MIN([col R] + internal gains,0),0)) ÷ 1,000 ÷ R44
V	Heating = -((([col N] + [col P]) x MIN([col R] + internal gains,0) + IF([col I] + [col K] < [col M] + [col O],(([col M] + [col O]) - ([col I] + [col K])) x MIN([col Q] + internal gains,0),0)) ÷ 1,000 ÷ R44
W	= [col S] + [col T] - [col U] - [col V]

Assumptions:	Value	Unit	CELL	Description
			REF	
Existing Heating Plant Efficiency	76.0%		R43	Baseline Boiler Efficiency
Proposed Heating Plant Efficiency	86.5%		R44	Proposed Boiler Efficiency

Project Template
Albert Payson Terhune-Elementary School
Replace Boilers

TMY-2 Weather Data for Newark, NJ								Existing Occupancy Schedule				Proposed EMS Operating Hours								Proposed		Savings
Amb. Temp Bin deg. F	Ave Temp deg. F	M.C.W.B deg. F	M.C. Enthalpy Btu/lbma	01-08 Hours	09-16 Hours	17-24 Hours	Total Bin Hours	Occ On-Peak Hrs.	UnOcc On-Peak Hrs.	Occ Off-Peak Hrs.	UnOcc Off-Peak Hrs.	Occ On-Peak Hrs.	UnOcc On-Peak Hrs.	Occ Off-Peak Hrs.	UnOcc Off-Peak Hrs.	Interacted Occ. Heat Load (MBH)	Interacted UnOcc. Heat Load (MBH)	Occ. Heat Usage (MMBTU)	UnOcc. Heat Usage (MMBTU)	Occ Cooling/Heating Energy Consump. (MMBTU)	UnOcc Cooling/Heating Energy Consump. (MMBTU)	Heating Energy Savings (MMBTU)
A	B	C	D	E	F	G	H	I	J	K	L	M	N	O	P	Q	R	S	T	U	V	W
Cooling																						
105 to 110	107.5	0.0	0.0	0	0	0	0	0	0	0	0	0	0	0	0							
100 to 105	102.5	0.0	0.0	0	0	0	0	0	0	0	0	0	0	0	0							
95 to 100	97.5	72.2	35.7	0	5	1	6	1	1	0	4	1	1	0	4							
90 to 95	92.5	73.8	37.3	0	33	7	40	8	8	0	24	8	8	0	24							
85 to 90	87.5	71.3	35.1	0	92	30	122	25	25	0	73	25	25	0	73							
80 to 85	82.5	69.2	33.2	8	330	162	500	100	102	0	298	100	102	0	298							
75 to 80	77.5	67.4	31.8	98	257	265	620	125	126	0	369	125	126	0	369							
70 to 75	72.5	64.6	29.7	325	236	286	847	170	173	0	504	170	173	0	504							
65 to 70	67.5	60.9	27.0	251	204	216	671	135	137	0	399	135	137	0	399							
60 to 65	62.5	56.3	24.0	358	268	301	927	186	189	0	552	186	189	0	552							
Heating																						
55 to 60	57.5	50.3	20.4	217	191	192	600	121	122	0	357	121	122	0	357	(322)	0	0	0	0	0	0
50 to 55	52.5	46.4	18.3	218	223	289	730	147	149	0	435	147	149	0	435	(426)	(46)	7	6	6	5	2
45 to 50	47.5	41.8	16.0	243	196	195	634	127	129	0	377	127	129	0	377	(529)	(139)	23	67	21	59	11
40 to 45	42.5	38.0	14.3	193	171	149	513	103	105	0	305	103	105	0	305	(633)	(232)	33	104	29	92	17
35 to 40	37.5	33.9	12.5	357	311	355	1,023	206	209	0	609	206	209	0	609	(737)	(325)	94	308	83	271	49
30 to 35	32.5	29.3	10.6	277	221	236	734	147	150	0	437	147	150	0	437	(841)	(418)	88	293	77	257	46
25 to 30	27.5	24.3	8.7	159	98	134	391	79	80	0	233	79	80	0	233	(945)	(511)	57	194	50	171	31
20 to 25	22.5	19.3	6.8	89	48	58	195	39	40	0	116	39	40	0	116	(1,049)	(604)	34	116	30	102	18
15 to 20	17.5	14.8	5.3	74	20	31	125	25	25	0	74	25	25	0	74	(1,152)	(697)	25	86	22	76	14
10 to 15	12.5	10.0	3.8	35	7	5	47	9	10	0	28	9	10	0	28	(1,256)	(790)	11	37	9	33	6
5 to 10	7.5	5.1	2.3	17	9	8	34	7	7	0	20	7	7	0	20	(1,360)	(883)	9	30	8	27	5
0 to 5	2.5	0.6	1.0	1	0	0	1	0	0	0	1	0	0	0	1	(1,464)	(976)	0	1	0	1	0
-5 to 0	(2.5)	0.0	0.0	0	0	0	0	0	0	0	0	0	0	0	0	(1,568)	(1,069)	0	0	0	0	0
-10 to -5	(7.5)	0.0	0.0	0	0	0	0	0	0	0	0	0	0	0	0	(1,671)	(1,162)	0	0	0	0	0
-15 to -10	(12.5)	0.0	0.0	0	0	0	0	0	0	0	0	0	0	0	0	(1,775)	(1,254)	0	0	0	0	0
-20 to -15	(17.5)	0.0	0.0	0	0	0	0	0	0	0	0	0	0	0	0	(1,879)	(1,347)	0	0	0	0	0
-25 to -20	(22.5)	0.0	0.0	0	0	0	0	0	0	0	0	0	0	0	0	(1,983)	(1,440)	0	0	0	0	0
				2,920	2,920	2,920	8,760	1,760	1,786	0	5,214	1,760	1,786	0	5,214			381	1,242	335	1,091	197

Cell Ref.	Comment
A-H	TMY-2 Weather Data for Newark, NJ
I - L	Occupied hours as per the RFP data
M - P	Equipment operating hours after EMS is installed
Q	Interacted Occupied Heating loads (MBH)
R	Interacted Unoccupied Heating loads (MBH)
S	Heating = -(MIN([col I] + [col K],[col M] + [col O]) x MIN([col Q] + internal gains,0) + IF([col I] + [col K] > [col M] + [col O],(([col I] + [col K]) - ([col M] + [col O])) x MIN([col R] + internal gains,0),0)) ÷ 1,000 ÷ R43
T	Heating = -((([col N] + [col P]) x MIN([col R] + internal gains,0) + IF([col I] + [col K] < [col M] + [col O],(([col M] + [col O]) - ([col I] + [col K])) x MIN([col Q] + internal gains,0),0)) ÷ 1,000 ÷ R43
U	Heating = -(MIN([col I] + [col K],[col M] + [col O]) x MIN([col Q] + internal gains,0) + IF([col I] + [col K] > [col M] + [col O],(([col I] + [col K]) - ([col M] + [col O])) x MIN([col R] + internal gains,0),0)) ÷ 1,000 ÷ R44
V	Heating = -((([col N] + [col P]) x MIN([col R] + internal gains,0) + IF([col I] + [col K] < [col M] + [col O],(([col M] + [col O]) - ([col I] + [col K])) x MIN([col Q] + internal gains,0),0)) ÷ 1,000 ÷ R44
W	= [col S] + [col T] - [col U] - [col V]

Assumptions:	Value	Unit	CELL	Description
			REF	
Existing Heating Plant Efficiency	76.0%		R43	Baseline Boiler Efficiency
Proposed Heating Plant Efficiency	86.5%		R44	Proposed Boiler Efficiency

Project Template
George Washington-Middle School
Replace Boilers

TMY-2 Weather Data for Newark, NJ								Existing Occupancy Schedule				Proposed EMS Operating Hours								Proposed		Savings
Amb. Temp Bin deg. F	Ave Temp deg. F	M.C.W.B deg. F	M.C. Enthalpy Btu/lbma	01-08 Hours	09-16 Hours	17-24 Hours	Total Bin Hours	Occ On-Peak Hrs.	UnOcc On-Peak Hrs.	Occ Off-Peak Hrs.	UnOcc Off-Peak Hrs.	Occ On-Peak Hrs.	UnOcc On-Peak Hrs.	Occ Off-Peak Hrs.	UnOcc Off-Peak Hrs.	Interacted Occ. Heat Load (MBH)	Interacted UnOcc. Heat Load (MBH)	Occ. Heat Usage (MMBTU)	UnOcc. Heat Usage (MMBTU)	Occ Cooling/Heating Energy Consump. (MMBTU)	UnOcc Cooling/Heating Energy Consump. (MMBTU)	Heating Energy Savings (MMBTU)
A	B	C	D	E	F	G	H	I	J	K	L	M	N	O	P	Q	R	S	T	U	V	W
Cooling																						
105 to 110	107.5	0.0	0.0	0	0	0	0	0	0	0	0	0	0	0	0							
100 to 105	102.5	0.0	0.0	0	0	0	0	0	0	0	0	0	0	0	0							
95 to 100	97.5	72.2	35.7	0	5	1	6	2	0	0	3	2	0	0	3							
90 to 95	92.5	73.8	37.3	0	33	7	40	16	0	1	23	16	0	1	23							
85 to 90	87.5	71.3	35.1	0	92	30	122	49	0	4	69	49	0	4	69							
80 to 85	82.5	69.2	33.2	8	330	162	500	202	0	16	282	202	0	16	282							
75 to 80	77.5	67.4	31.8	98	257	265	620	251	0	20	349	251	0	20	349							
70 to 75	72.5	64.6	29.7	325	236	286	847	343	0	27	477	343	0	27	477							
65 to 70	67.5	60.9	27.0	251	204	216	671	272	0	21	378	272	0	21	378							
60 to 65	62.5	56.3	24.0	358	268	301	927	375	0	29	522	375	0	29	522							
Heating																						
55 to 60	57.5	50.3	20.4	217	191	192	600	243	0	19	338	243	0	19	338	(701)	0	28	0	26	0	2
50 to 55	52.5	46.4	18.3	218	223	289	730	296	0	23	411	296	0	23	411	(961)	(139)	138	40	127	37	13
45 to 50	47.5	41.8	16.0	243	196	195	634	257	0	20	357	257	0	20	357	(1,221)	(416)	210	158	194	146	28
40 to 45	42.5	38.0	14.3	193	171	149	513	208	0	16	289	208	0	16	289	(1,481)	(693)	242	228	224	211	35
35 to 40	37.5	33.9	12.5	357	311	355	1,023	414	0	32	576	414	0	32	576	(1,741)	(970)	628	655	581	605	96
30 to 35	32.5	29.3	10.6	277	221	236	734	297	0	23	414	297	0	23	414	(2,000)	(1,247)	555	613	513	567	88
25 to 30	27.5	24.3	8.7	159	98	134	391	158	0	12	220	158	0	12	220	(2,260)	(1,524)	351	403	325	373	57
20 to 25	22.5	19.3	6.8	89	48	58	195	79	0	6	110	79	0	6	110	(2,520)	(1,801)	203	239	187	221	33
15 to 20	17.5	14.8	5.3	74	20	31	125	51	0	4	70	51	0	4	70	(2,780)	(2,078)	148	178	137	164	24
10 to 15	12.5	10.0	3.8	35	7	5	47	19	0	1	26	19	0	1	26	(3,040)	(2,355)	62	76	58	70	10
5 to 10	7.5	5.1	2.3	17	9	8	34	14	0	1	19	14	0	1	19	(3,299)	(2,632)	50	62	46	57	8
0 to 5	2.5	0.6	1.0	1	0	0	1	0	0	0	1	0	0	0	1	(3,559)	(2,910)	2	2	1	2	0
-5 to 0	(2.5)	0.0	0.0	0	0	0	0	0	0	0	0	0	0	0	0	(3,819)	(3,187)	0	0	0	0	0
-10 to -5	(7.5)	0.0	0.0	0	0	0	0	0	0	0	0	0	0	0	0	(4,079)	(3,464)	0	0	0	0	0
-15 to -10	(12.5)	0.0	0.0	0	0	0	0	0	0	0	0	0	0	0	0	(4,339)	(3,741)	0	0	0	0	0
-20 to -15	(17.5)	0.0	0.0	0	0	0	0	0	0	0	0	0	0	0	0	(4,598)	(4,018)	0	0	0	0	0
-25 to -20	(22.5)	0.0	0.0	0	0	0	0	0	0	0	0	0	0	0	0	(4,858)	(4,295)	0	0	0	0	0
				2,920	2,920	2,920	8,760	3,546	0	278	4,936	3,546	0	278	4,936			2,616	2,652	2,419	2,453	396

Cell Ref.	Comment
A-H	TMY-2 Weather Data for Newark, NJ
I - L	Occupied hours as per the RFP data
M - P	Equipment operating hours after EMS is installed
Q	Interacted Occupied Heating loads (MBH)
R	Interacted Unoccupied Heating loads (MBH)
S	Heating = -(MIN([col I] + [col K],[col M] + [col O]) x MIN([col Q] + internal gains,0) + IF([col I] + [col K] > [col M] + [col O],(([col I] + [col K]) - ([col M] + [col O])) x MIN([col R] + internal gains,0),0)) ÷ 1,000 ÷ R43
T	Heating = -((([col N] + [col P]) x MIN([col R] + internal gains,0) + IF([col I] + [col K] < [col M] + [col O],(([col M] + [col O]) - ([col I] + [col K])) x MIN([col Q] + internal gains,0),0)) ÷ 1,000 ÷ R43
U	Heating = -(MIN([col I] + [col K],[col M] + [col O]) x MIN([col Q] + internal gains,0) + IF([col I] + [col K] > [col M] + [col O],(([col I] + [col K]) - ([col M] + [col O])) x MIN([col R] + internal gains,0),0)) ÷ 1,000 ÷ R44
V	Heating = -((([col N] + [col P]) x MIN([col R] + internal gains,0) + IF([col I] + [col K] < [col M] + [col O],(([col M] + [col O]) - ([col I] + [col K])) x MIN([col Q] + internal gains,0),0)) ÷ 1,000 ÷ R44
W	= [col S] + [col T] - [col U] - [col V]

Assumptions:	Value	Unit	CELL	Description
			REF	
Existing Heating Plant Efficiency	80.0%		R43	Baseline Boiler Efficiency
Proposed Heating Plant Efficiency	86.5%		R44	Proposed Boiler Efficiency

Project Template
Wayne Hills-High School
Replace Boilers

TMY-2 Weather Data for Newark, NJ								Existing Occupancy Schedule				Proposed EMS Operating Hours								Proposed		Savings
Amb. Temp Bin deg. F	Ave Temp deg. F	M.C.W.B deg. F	M.C. Enthalpy Btu/lbma	01-08 Hours	09-16 Hours	17-24 Hours	Total Bin Hours	Occ On-Peak Hrs.	UnOcc On-Peak Hrs.	Occ Off-Peak Hrs.	UnOcc Off-Peak Hrs.	Occ On-Peak Hrs.	UnOcc On-Peak Hrs.	Occ Off-Peak Hrs.	UnOcc Off-Peak Hrs.	Interacted Occ. Heat Load (MBH)	Interacted UnOcc. Heat Load (MBH)	Occ. Heat Usage (MMBTU)	UnOcc. Heat Usage (MMBTU)	Occ Cooling/Heating Energy Consump. (MMBTU)	UnOcc Cooling/Heating Energy Consump. (MMBTU)	Heating Energy Savings (MMBTU)
A	**B**	**C**	**D**	**E**	**F**	**G**	**H**	**I**	**J**	**K**	**L**	**M**	**N**	**O**	**P**	**Q**	**R**	**S**	**T**	**U**	**V**	**W**
Cooling																						
105 to 110	107.5	0.0	0.0	0	0	0	0	0	0	0	0	0	0	0	0							
100 to 105	102.5	0.0	0.0	0	0	0	0	0	0	0	0	0	0	0	0							
95 to 100	97.5	72.2	35.7	0	5	1	6	2	0	1	3	2	0	1	3							
90 to 95	92.5	73.8	37.3	0	33	7	40	16	0	6	18	16	0	6	18							
85 to 90	87.5	71.3	35.1	0	92	30	122	49	0	19	54	49	0	19	54							
80 to 85	82.5	69.2	33.2	8	330	162	500	202	0	76	222	202	0	76	222							
75 to 80	77.5	67.4	31.8	98	257	265	620	251	0	94	275	251	0	94	275							
70 to 75	72.5	64.6	29.7	325	236	286	847	343	0	129	376	343	0	129	376							
65 to 70	67.5	60.9	27.0	251	204	216	671	272	0	102	298	272	0	102	298							
60 to 65	62.5	56.3	24.0	358	268	301	927	375	0	141	411	375	0	141	411							
Heating																						
55 to 60	57.5	50.3	20.4	217	191	192	600	243	0	91	266	243	0	91	266	(1,393)	0	51	0	44	0	6
50 to 55	52.5	46.4	18.3	218	223	289	730	296	0	111	324	296	0	111	324	(1,842)	(212)	302	36	265	32	41
45 to 50	47.5	41.8	16.0	243	196	195	634	257	0	96	281	257	0	96	281	(2,291)	(637)	471	188	413	165	80
40 to 45	42.5	38.0	14.3	193	171	149	513	208	0	78	227	208	0	78	227	(2,741)	(1,061)	550	279	483	246	101
35 to 40	37.5	33.9	12.5	357	311	355	1,023	414	0	155	454	414	0	155	454	(3,190)	(1,486)	1,432	811	1,259	712	272
30 to 35	32.5	29.3	10.6	277	221	236	734	297	0	111	325	297	0	111	325	(3,639)	(1,911)	1,269	764	1,115	671	247
25 to 30	27.5	24.3	8.7	159	98	134	391	158	0	59	173	158	0	59	173	(4,088)	(2,335)	805	504	707	442	159
20 to 25	22.5	19.3	6.8	89	48	58	195	79	0	30	86	79	0	30	86	(4,538)	(2,760)	466	299	409	263	93
15 to 20	17.5	14.8	5.3	74	20	31	125	51	0	19	55	51	0	19	55	(4,987)	(3,184)	340	223	298	196	68
10 to 15	12.5	10.0	3.8	35	7	5	47	19	0	7	21	19	0	7	21	(5,436)	(3,609)	143	95	126	84	29
5 to 10	7.5	5.1	2.3	17	9	8	34	14	0	5	15	14	0	5	15	(5,886)	(4,033)	115	77	101	68	23
0 to 5	2.5	0.6	1.0	1	0	0	1	0	0	0	0	0	0	0	0	(6,335)	(4,458)	4	3	3	2	1
-5 to 0	(2.5)	0.0	0.0	0	0	0	0	0	0	0	0	0	0	0	0	(6,784)	(4,883)	0	0	0	0	0
-10 to -5	(7.5)	0.0	0.0	0	0	0	0	0	0	0	0	0	0	0	0	(7,233)	(5,307)	0	0	0	0	0
-15 to -10	(12.5)	0.0	0.0	0	0	0	0	0	0	0	0	0	0	0	0	(7,683)	(5,732)	0	0	0	0	0
-20 to -15	(17.5)	0.0	0.0	0	0	0	0	0	0	0	0	0	0	0	0	(8,132)	(6,156)	0	0	0	0	0
-25 to -20	(22.5)	0.0	0.0	0	0	0	0	0	0	0	0	0	0	0	0	(8,581)	(6,581)	0	0	0	0	0
				2,920	2,920	2,920	8,760	3,546	0	1,329	3,885	3,546	0	1,329	3,885			5,945	3,280	5,224	2,881	1,120

Cell Ref.	Comment
A-H	TMY-2 Weather Data for Newark, NJ
I - L	Occupied hours as per the RFP data
M - P	Equipment operating hours after EMS is installed
Q	Interacted Occupied Heating loads (MBH)
R	Interacted Unoccupied Heating loads (MBH)
S	Heating = -(MIN([col I] + [col K],[col M] + [col O]) x MIN([col Q] + internal gains,0) + IF([col I] + [col K] > [col M] + [col O],(([col I] + [col K]) - ([col M] + [col O])) x MIN([col R] + internal gains,0),0)) ÷ 1,000 ÷ R43
T	Heating = -(([col N] + [col P]) x MIN([col R] + internal gains,0) + IF([col I] + [col K] < [col M] + [col O],(([col M] + [col O]) - ([col I] + [col K])) x MIN([col Q] + internal gains,0),0)) ÷ 1,000 ÷ R43
U	Heating = -(MIN([col I] + [col K],[col M] + [col O]) x MIN([col Q] + internal gains,0) + IF([col I] + [col K] > [col M] + [col O],(([col I] + [col K]) - ([col M] + [col O])) x MIN([col R] + internal gains,0),0)) ÷ 1,000 ÷ R44
V	Heating = -(([col N] + [col P]) x MIN([col R] + internal gains,0) + IF([col I] + [col K] < [col M] + [col O],(([col M] + [col O]) - ([col I] + [col K])) x MIN([col Q] + internal gains,0),0)) ÷ 1,000 ÷ R44
W	= [col S] + [col T] - [col U] - [col V]

Assumptions:	Value	Unit	CELL	Description
			REF	
Existing Heating Plant Efficiency	76.0%		R43	Baseline Boiler Efficiency
Proposed Heating Plant Efficiency	86.5%		R44	Proposed Boiler Efficiency

Appendix for ECM 12:
Replace Boilers

II. Manufacturer Specification Sheets

"Page content is subject to Confidentiality Restrictions"

This page is intentionally left blank.

BMK 1.5LN GWB
TECHNICAL DATA SHEET

AERCO LOW NOx Benchmark Gas Fired Hot Water Boiler System

The AERCO Benchmark 1.5 Low NOx (BMK1.5LN) Water Boiler is designed for condensing application in any closed loop hydronic system. It delivers 20:1 burner turndown to match energy input directly to fluctuating system loads to yield the highest possible seasonal efficiencies. As illustrated below, the unit's operating efficiency actually increases as the load decreases.

To minimize emissions, the BMK1.5LN is fitted with a low NOx burner whose emissions will consistently measure <16 ppm of NOx corrected to 3% excess oxygen at all firing rates. Certified by SCAQMD, the fully modulating burner also maintains AERCO standards for energy efficiency, longevity, reliability, and construction quality.

The BMK1.5LN can be used singly or in modular arrangements and offers selectable modes of operation. In addition to controlling the boiler according to a constant set point, indoor/outdoor reset schedule or 4-20mA signal, one or more can be integrated via Modbus communications protocol to AERCO's multiple boiler management system (BMS) or a facility-wide Energy Management or Building Automation System.

OPERATING EFFICIENCY

Comprehensive tests are being conducted to confirm the unit's efficiency over its entire 75,000 to 1,500,000 BTU/hr. operating range for a variety of operating conditions. The initial boundary tests indicate that efficiency up to 99.3% can be achieved when the unit operates at its lowest firing rate (5% input) with 60°F inlet water temperature. Even at full fire (100% input), the BMK1.5LN delivers exceptional efficiency.

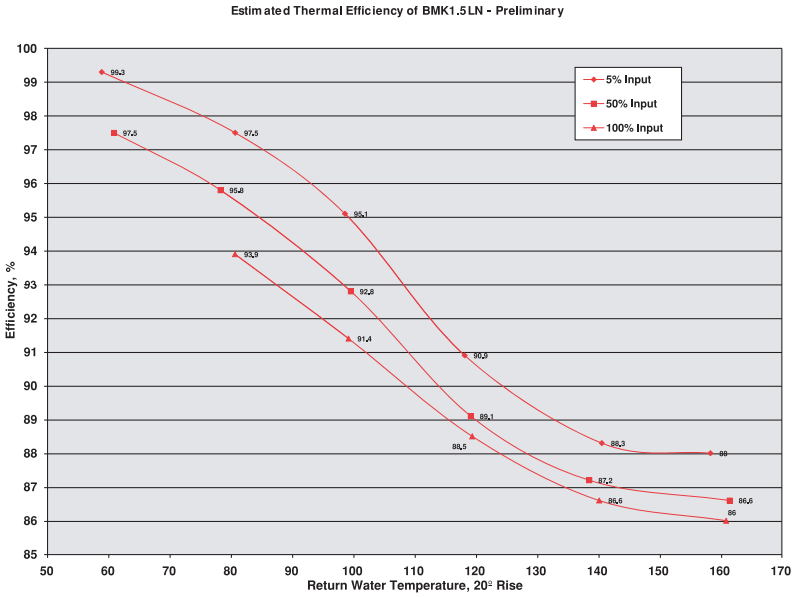

FEATURES:

- Natural Gas
- (Optional) Dual-Fuel-Natural Gas with Propane Back-Up
- Separate Fuel Connections Provided with Dual Fuel Option
- 20:1 Turndown Ratio
- NOx Emissions <16 ppm at All Firing Rates (when fired with natural gas)
- Direct or Conventional Vent Capabilities
- AL29-4C Vent Materials Required per UL1738
- Quiet Operation Throughout Firing Range
- Internal Low Water Cutoff (Manual Reset)
- Compact Footprint (79" H x 28"W x 36"D)
- Precise Temperture Control
- Sealed Combustion Capable
- Ventless Supply Gas Regulator
- UL, CUL, for Alcove Installation on Combustible Flooring

DIMENSIONS:

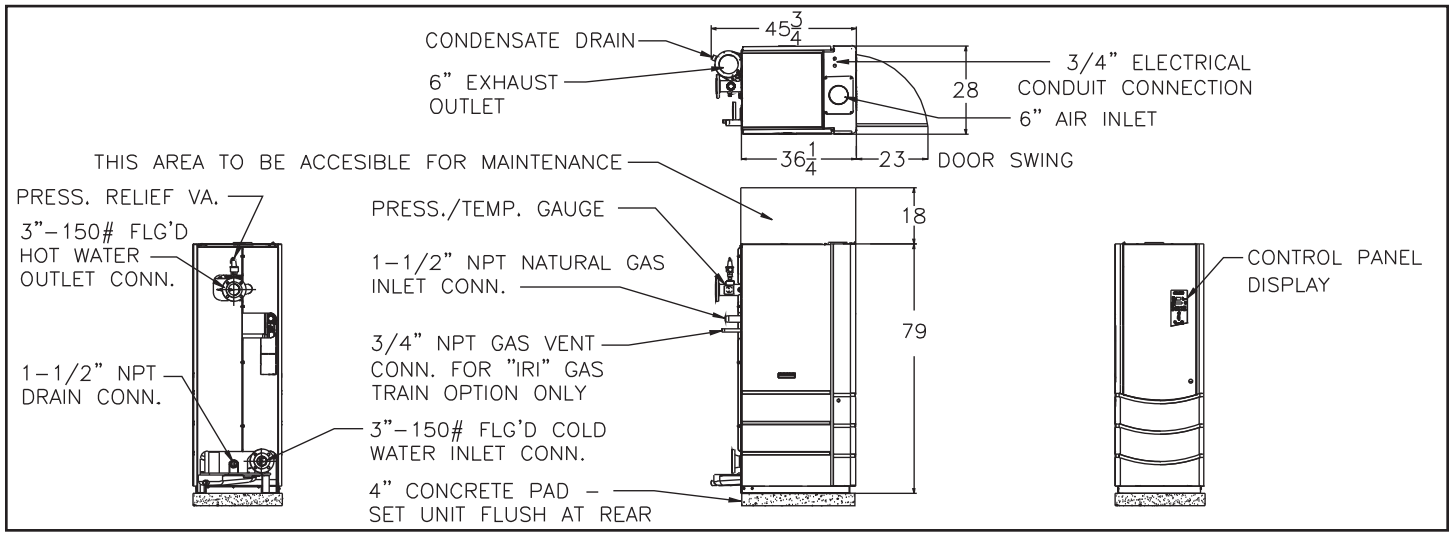

RATINGS AND DIMENSIONS:

Modules	Model (a)	Mbh Input (b)	Mbh Output (b) (c)	Width (1)	Depth	Height	Weight
One (1)	BMK-1.5LN	1,500 mbh	1,290 mbh- 1,409 mbh	2'4"	3'10"	6'7"	1,757 lbs
Two (2)	BMK-1.5LN2	3,000 mbh	2,580 mbh- 2,817 mbh	6'8"	3'10"	6'7"	3,514 lbs
Three (3)	BMK-1.5LN3	4,500 mbh	3,870 mbh- 4,226 mbh	11'0"	3'10"	6'7"	5,271 lbs
Four (4)	BMK-1.5LN4	6,000 mbh	5,160 mbh- 5,634 mbh	15'4"	3'10"	6'7"	7,028 lbs
Five (5)	BMK-1.5LN5	7,500 mbh	6,450 mbh- 7,043 mbh	19'8"	3'10"	6'7"	8,785 lbs
Six (6)	BMK-1.5LN6	9,000 mbh	7,740 mbh- 8,451 mbh	24'0"	3'10"	6'7"	10,542 lbs
Seven (7)	BMK-1.5LN7	10,500 mbh	9,030 mbh- 9,860 mbh	28'4"	3'10"	6'7"	12,299 lbs
Eight (8)	BMK-1.5LN8	12,000 mbh	10,320 mbh- 11,268 mbh	32'8"	3'10"	6'7"	14,056 lbs

(1) Assume 24" between units. Zero side wall clearance is not provided. Consult local sales representative.
(a) Style to be determined by individual application requirement.
(b) Altitude below 2000'. Apply altitude correction factor above 2000'.
(c) Output dependent upon application – see efficiency curves

SPECIFICATIONS:

BTU Input.....1,500,000 BTU/H
Min. Output @ Full Input.....1,290,000 BTU/H
ASME Working Pressure.....160 PSIG
Electrical Options.....120/1/60 20 Amp (13 Amp FLA)
Gas Requirements.....14" W.C Maximum
Standard Unit–FM Gas Train.....4.0" W.C. Min.@ Full Load
Standard Unit–IRI Gas Train .....4.2" W.C. Min.@ Full Load
Dual Fuel–FM Gas Train–Nat. Gas....4.0" W.C. Min.@ Full Load
Dual Fuel–FM Gas Train–Propane ...4.0" W.C. Min.@ Full Load
Dual Fuel–IRI Gas Train–Nat. Gas ....4.2" W.C. Min.@ Full Load
Dual Fuel–IRI Gas Train–Propane.....2" W.C. Min.@ Full Load
Vent Size.....6" Diameter
Water Connections.....3" Flanged 150lb. ANSI
Gas Connection.....1.50" NPT
Min./Max. Water Flow.....25 GPM / 225 GPM
Water Pressure Drop.....4.0 PSIG @ 130 GPM
Water Volume.....27 gallons
Control Range.....50°F to 190°F
Ambient Temperature.....0°F to 130°F
NOx Emissions Certification.....SCAQMD, TCEQ
Standard Listings & Approvals.....UL, CUL, CSD-1, ASME
Gas Train Options.....FM Compliant or Factory Installed IRI
Weight, Installed.....1533 lbs. (dry), 1757lbs. (wet)

Represented By:

WATER HEATERS • BOILERS • PARTS & ACCESSORIES
AERCO INTERNATIONAL, INC.
100 ORITANI DR. • BLAUVELT, NY 10913
(845) 580-8000 • FAX (845) 580-8090
www.aerco.com

Specifications subject to change without prior notice.
Consult website or contact AERCO.
BMK1.5LN 01/2012 NY

BMK SERIES
TECHNICAL DATA SHEET

Benchmark 3000
Condensing Hydronic Boilers

The AERCO Benchmark 3000 Water Boiler is designed for condensing application in any closed loop hydronic system. It delivers 15:1 burner turndown to match energy input directly to fluctuating system loads to yield the highest possible seasonal efficiencies. And no other product packs as much capacity into such a small footprint.

To minimize emissions, the BMK3000 is fitted with a low NOx burner whose emissions will consistently measure <30 ppm of NOx corrected to 3% excess oxygen at all firing rates. The fully modulating burner also maintains AERCO standards for energy efficiency, longevity, reliability and construction quality.

The BMK3000 comes standard with AERCO's Patent Pending, Oxygen Level (O2) monitoring system. This monitoring system, designed to display the O2 level directly on the unit in real time, can also be remotely monitored via Modbus giving the customer the ability to measure the emissions level and fuel economy of the boiler without traditional combustion calibration devices.

The BMK3000 can be used as an individual unit or in modular arrangements and offers selectable modes of operation. In addition to controlling the boiler according to a constant set point, indoor/outdoor reset schedule or 4-20mA signal, one or more units can be integrated via Modbus communications protocol to AERCO's multiple boiler management system (BMS) or a facility-wide Energy Management or Building Automation System.

FEATURES:

- Natural Gas, Propane, or Dual Fuel
- 15:1 Turndown Ratio (7%)
- Oxygen Level (O2) Monitoring (optional)
- Stainless Steel Fire Tube heat exchanger
- Capable of variable primary flow Installations
- NOx Emissions 30 ppm or less @ all firing rates
- Compact Footprint (78"H x 28"W x 56"D)
- Precise Temperature Control
- Sealed Combustion Capable
- Easy Open Access for Service
- Acceptable vent materials AL29-4C, Polypropylene
- Reliable Quiet Operation
- Controls Options
  - Constant Setpoint
  - Indoor/ Outdoor Reset
  - Remote Setpoint
  - 4-20mA signal or ModBus

25 YEARS 1987 - 2012
Condensing Firetube Designs

DIMENSIONS:

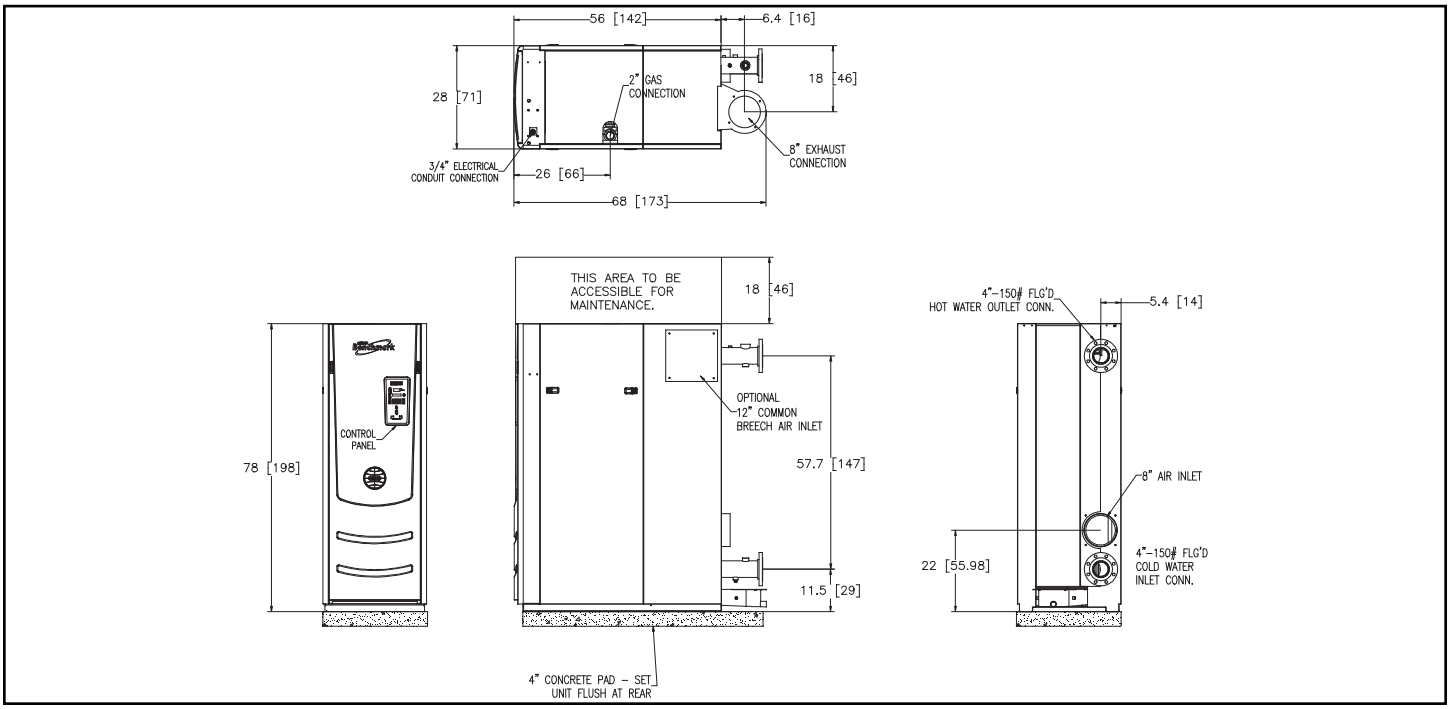

RATINGS AND DIMENSIONS:

Model	MBH Input (a)	MBH Output (a) (b)	AHRI Efficiency 80 to 180 F	Turndown	Width	Depth	Height	Water Volume (gal)	Weight (dry) lbs.	Weight (wet) lbs.
BMK3000	3000	2610mbh-2880mbh	93.5%	15:1	2'4"	4'8"	6'6"	80	2,170	2,580

(a) Altitude below 5000'. Apply altitude correction factor above 5000'.
(b) Output dependent upon application – see efficiency curves

SPECIFICATIONS:

ASME Working Pressure……160 PSIG
Electrical Options……200-240V/3/60 FLA 10A
……380-480V/3/60 FLA 5A
Gas Requirements …… 14" W.C Maximum
Nat. Gas or Propane Only
FM Gas Train ……4.0" W.C. Min.@ Full Load
DBB (IRI) Gas Train …… 4.5" W.C. Min.@ Full Load
Dual Fuel
FM Gas Train - Nat. Gas.....8.0" W.C. Min @ Full Fire
FM Gas Train - Propane .....4.0"W.C. Min @ Full Fire
DDB (IRI) Gas Train - Nat. Gas...8.0" W.C. Min @ Full Fire
DDB (IRI) Gas Train - Propane .. 4.0" W.C. min @ Full Fire

Water Connections ……4" Flanged 150lb ANSI
Vent/ Air Intake Connections …… 8 Inch
Communications Protocol ……MODbus
Gas Connection …… 2" NPT
Min./Max. Water Flow ……25 GPM / 375 GPM
Water Pressure Drop …… 3.0 PSIG @ 261 GPM
Control Range ……50°F to 190°F
Ambient Temperature …… 0°F to 130°F
Standard Listings & Approvals
…… UL, CUL, CSD-1, ASME
Gas Train Options……FM Compliant or Factory Installed DBB (IRI)

*Up to 5000' Altitude

**Output is dependent upon return water temp. and firing rate.

Represented By:

Specifications subject to change without prior notice.
Consult website or contact AERCO.
BMK3000 11/2012 NY

WATER HEATERS • BOILERS • PARTS & ACCESSORIES
AERCO INTERNATIONAL, INC.
100 ORITANI DR. • BLAUVELT, NY 10913
(845) 580-8000 • FAX (845) 580-8090
www.aerco.com

BMK SERIES
TECHNICAL DATA SHEET

Benchmark 750 - 6000
Condensing Hydronic Boilers

The AERCO Benchmark (BMK) Water Boiler is designed for condensing application in any closed loop hydronic system. It delivers unmatched burner modulation to match energy input directly to fluctuating system loads to yield the highest possible seasonal efficiencies. And no other product packs as much capacity into such a small footprint.

To minimize emissions, the BMK Series is fitted with a low NOx burner whose emissions will meet the most stringent NOx and CO requirements. The fully modulating burner also maintains AERCO standards for energy efficiency, longevity, reliability and construction quality.

The BMK Series comes standard with AERCO's Patent Pending, Oxygen Level (O_2) monitoring system. This monitoring system, designed to display the O_2 level directly on the unit in real time, can also be remotely monitored via Modbus giving the customer the ability to measure the emissions level and fuel economy of the boiler without traditional combustion calibration devices.

The BMK boilers can be used as an individual unit or in modular arrangements and offers selectable modes of operation. In addition to controlling the boiler according to a constant set point, indoor/outdoor reset schedule or 4-20mA signal, one or more units can be integrated via Modbus communications protocol. For boiler plants ranging from 2-8 boilers, AERCO'S built-in Boiler Management Sequencer* can be utilized. For heating plants greater than 8 boilers, AERCO's ACS (AERCO Control System) provides the right solution. Likewise, Benchmark systems can be easily integrated with a facility-wide Energy Management or Building Automation System.

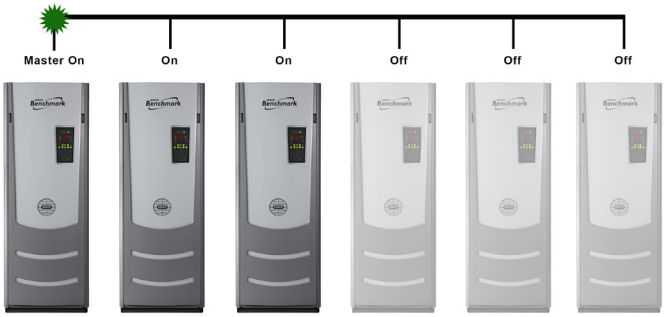

*AERCO's on-board BMS sequencer available December 2013

FEATURES:

- Natural Gas, Propane, or Dual Fuel (model dependant)
- 20:1 Turndown Ratio (5%) depending on capacity
- Oxygen Level (O_2) Monitoring Standard
- Stainless Steel Fire Tube heat exchanger
- Capable of variable primary flow Installations
- NOx Emissions capable of 9PPM or less @ all firing rates *depending on capacity
- Compact Footprint
- Precise Temperature Control
- On Board Boiler Management Sequencer (BMS)
- Ducted Combustion Air Capable
- Easy Open Access for Service
- Acceptable vent materials AL29-4C, Polypropylene, PVC, cPVC (model dependant)
- Reliable Quiet Operation
- Controls Options
  - Constant Setpoint
  - Indoor/ Outdoor Reset
  - Remote Setpoint
  - 4-20mA signal or ModBus

RATINGS:

Model Number	Min Input MBH	Max Input MBH	Max Output[a] MBH	Efficiency Range	AHRI Efficiency 80º to 180ºF
BMK 750	50	750	653-720	87%-98%	95.50%
BMK 1000	50	1000	870-960	87%-98%	96.80%
BMK 1500	75	1500	1305-1425	87%-99%	95% (pending)
BMK 2000	100	2000	1740-1900	87%-98%	95% (pending)
BMK 2500	167	2500	2175-2360	87%-98%	93.50%
BMK 3000	200	3000	2610-2880	87%-98%	93.50%
BMK 6000**	400	6000	5220-5670	87%-98%	94.50%

[a]Max output dependent upon application - See efficiency curves
**See separate BMK6000 Technical Data Sheet for additional BMK6000 details

DIMENSIONS (INCHES):

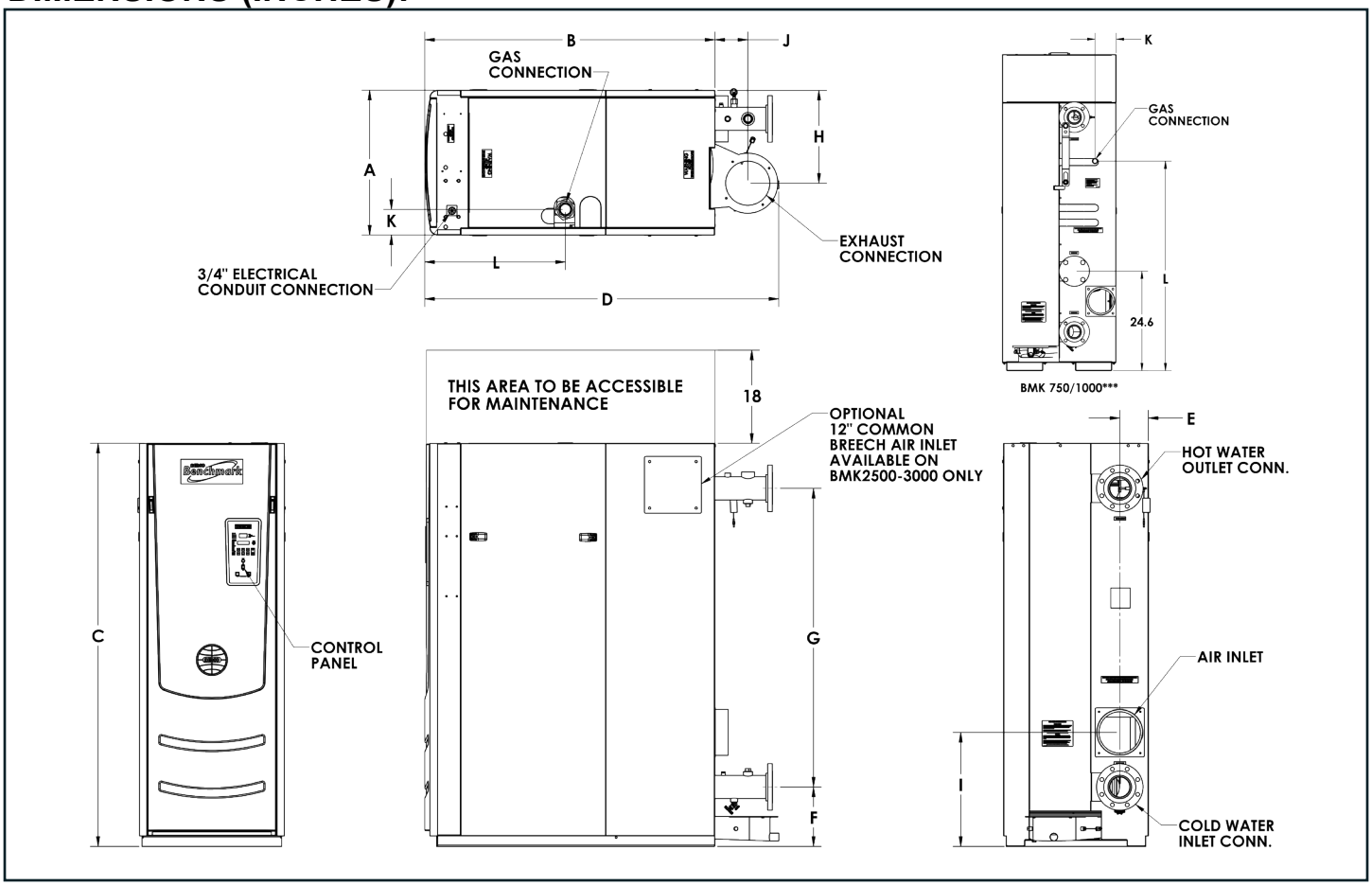

Model	(Width) A	(Depth) B	(Height) C	D	E	F	G	H	I	J	K	L
BMK 750	28”	25”	78”	34”	10”	10”	53”	21”	17”	4”	5”	51.8”
BMK 1000	28”	25”	78”	34”	10”	10”	53”	21”	17”	4”	5”	51.8”
BMK 1500	28”	43.6”	78”	58.4”	7”	11.5”	57.8”	18”	22”	8.9”	4.7”	19.5”
BMK 2000	28”	43.6”	78”	58.4”	7”	11.5”	57.8”	18”	22”	8.9”	4.7”	19.5”
BMK 2500	28”	56”	78”	68.4”	5.4”	11.5”	57.8”	18”	22”	6.4”	3.6”	26”
BMK 3000	28”	56”	78”	68.4”	5.4”	11.5”	57.8”	18”	22”	6.4”	3.6”	26”
BMK 6000**	34”	89.3”	79.4”	108.3”	6.2”	42.1”	N/A	15.6”	N/A	10”	28.7”	23.7”

**See separate BMK6000 Technical Data Sheet for additional BMK6000 dimension details
***BMK750/1000 Feature Dual Inlet Connections

SPECIFICATIONS:

	BMK750	BMK1000	BMK1500	BMK2000	BMK2500	BMK3000	BMK 6000**
Boiler Category	ASME Sect.IV	ASME Sect.IV	ASME Sect.IV	ASME Sect.IV	ASME Sect.IV	ASME Sect.IV	ASME Sect.IV
Gas Connections (NPT)	1''	1''	1.5''	2''	1.5''	2''	2''
Max. Gas Pressure	14''	14''	14''	14''	14''	14''	2psi
Min. Gas Pressure	4''	4''	4''	4''	4''	4''	14''
Max. Allowed Working Pressure	160 PSIG	160 PSIG	160 PSIG	160 PSIG	160 PSIG	160 PSIG	80 PSIG/150 PSIG Optional
Electrical Req. 120V/1PH/60Hz [1]	13 FLA	13 FLA	16 FLA	16 FLA	N/A	N/A	N/A
Electrical Req. 208V/3PH/60Hz [1]	N/A	N/A	N/A	N/A	10 FLA	10 FLA	19 FLA
Electrical Req. 460V/3PH/60Hz [1]	N/A	N/A	N/A	N/A	5 FLA	5 FLA	12 FLA
Water Connections (Flanged)	3''	3''	4''	4''	4''	4''	6''
Min. Water Flow (GPM)	25	25	25	25	35	35	75
Max. Water Flow (GPM)	175	175	250	350	350	350	600
Water Volume Gallons	16.25	14.25	34	28	58	55	110
Water Pressure Drop	3.0 PSIG @ 100 GPM	3.0 PSIG @ 100 GPM	3.0 PSIG @ 170 GPM	3.0 PSIG @ 170 GPM	3.0 PSIG @ 218 GPM	3.0 PSIG @ 261 GPM	4.0 PSIG @ 570 GPM
Turndown	15:1 (7%)	20:1 (5%)	20:1 (5%)	20:1 (5%)	15:1 (7%)	15:1 (7%)	15:1 (7%)
Vent/Air Intake Connections	6 Inch	6 Inch	6 Inch	8 Inch	8 Inch	8 Inch	14 Inch
Vent Materials	AL29-4C Polypro, CPVC, PVC	AL29-4C Polypro, CPVC, PVC	AL29-4C Polypro	AL29-4C Polypro	AL29-4 Polypro	AL29-4C Polypro	AL29-4C
Type of Gas	Natural Gas, Propane	Natural Gas, Propane	Natural Gas, Propane, Dual Fuel	Natural Gas, Propane, Dual Fuel	Natural Gas, Propane, Dual Fuel	Natural Gas, Propane, Dual Fuel	Natural Gas, Propane, Dual Fuel
Temperature Control Range	50ºF to 190ºF						
Ambient Temperature Range	0ºF to 130ºF						
Standard Listings & Approvals	UL, CUL, CSD-1, ASME, AHRI						
Gas Train Operations	FM Compliant or Factory Installed DBB (IRI) (BMK750-BMK3000 Only) FM Compliant (BMK 6000)						
Weight (dry) lbs.	669	700	1406	1500	2,000	2,170	3,000
Weight (wet) lbs.	802	817	1654	1760	2,332	2,580	3,920
Shipping Weight lbs.	862	900	1606	1700	2,200	2,370	3,800

**See separate BMK6000 Technical Data Sheet for additional BMK6000 details

[1] See Benchmark Electrical Power Guide GF-2060 for Service Disconnect Switch amperage requirements.

NOTES:

Represented By:

WATER HEATERS • BOILERS • PARTS & ACCESSORIES
AERCO INTERNATIONAL, INC.
100 ORITANI DR. • BLAUVELT, NY 10913
(845) 580-8000 • FAX (845) 580-8090
www.aerco.com

Specifications subject to change without prior notice. Consult website or contact AERCO.
BMK SERIES 08/2013 NY

ECM 13:
Gym De-Stratification Fans

ECM Overview

Ameresco proposes to install Zoo thermal equalizing fans or equivalent. The thermal equalizing fans will more effectively distribute the heating energy in high ceiling applications. In a large gymnasium or cafetoriums with a high ceiling the heat rises to the ceiling and cooler air settles at the floor. Most gymnasiums have roof or ceiling mounted HVAC equipment and the majority of the conditioned air never reaches the floor, resulting in uncomfortable conditions for space occupants. In addition, poor mixing of the conditioned space air results in significant overheating of the space. Space temperature sensors are located on the walls near the floor and to satisfy the space temperature requirements the ceiling area must be significantly overheated resulting in higher energy consumption and costs. Thermal equalizing fans will provide significantly improved mixing of the air and result in less energy consumed to heat a given space and provide improved occupant comfort.

Figure 13.1: Thermal equalizing fans will be installed in the gymnasiums.

ECM Detail

Existing System

The schools in the Wayne Public School District (District) have large gymnasiums and cafeterias with ceiling heights ranging from approximately 15 to 25 feet. The gymnasiums are heated by ceiling mounted heating and ventilation units (HV units) or floor mounted radiators. These units supply heat or heated air to the space. Since the heated air rises to the ceiling much of the heat never reaches the floor resulting in cooler conditions at the floor and higher temperatures at the ceiling heights. This stratification of the air results in overheating the ceiling areas to achieve comfortable conditions at the floor level where the temperature control thermostats or temperature sensors are located. The large temperature gradient results in significant overheating and increased energy use for each space.

"Page content is subject to Confidentiality Restrictions"

Facility	Location	Quantity	Zoo Fan model #
Lafayette Elementary School	Gymnasium	2	H30
Ryerson Elementary School	Stage	1	H30
Ryerson Elementary School	Gymnasium	2	H30
Anthony Wayne Middle School	Gymnasium	6	H30
George Washington Middle School	Gymnasium	4	H30
Schuyler Coalfax Middle School	Gymnasium	4	H30
Wayne Hills High School	Gymnasium	6	H30
Wayne Hills High School	Aux. Gymnasium	4	H30
Wayne Valley High School	Gymnasium	6	H30
Total		**35**	

Table 13.1: Quantity and Location of De-stratification Fans.

Proposed System

Ameresco proposes to install Zoo thermal equalization fans to better circulate the air located in the gymnasiums. Table 13.1 shows the quantity and location of the proposed fan installations. The new de-stratification fans provide better mixing of the air in high ceiling environments to reduce heating energy required to provide comfortable conditions at the floor level. The proposed fans are compact totally enclosed and impact resistant. These fans are specifically designed for gymnasium environments and have internal fan blades that cannot be damaged from ball strikes or other hazards. The units can be powered from 120 volt or 277 volt power supply. The proposed units are only 40 watts and consume minimal energy when operating. A wall switch will be installed to turn on all fans in the space when needed to minimize electric energy consumption. Each unit is capable properly mixing the air for approximately 1,500 to 2,000 sq. ft. of floor space.

Equipment, Design and Construction Documentation

Equipment will be identified in submittals provided to District for approval prior to procurement. Documents will be submitted to the engineering maintenance department, for their review and comment. Upon approval, these will constitute the construction documents. Upon completion of the construction phase, the documents will be revised as needed to reflect "As-Built" conditions, and submitted in multiple to District for record.

Impact on Facility Operations and Performance

The thermal equalizing fans will enhance facility operations by reducing energy usage during occupied periods. Students, teachers and administrators will have greater occupant comfort.

"Page content is subject to Confidentiality Restrictions"

Appendix for ECM 13: Gym De-Stratification fans

I. Energy Savings Calculations

"Page content is subject to Confidentiality Restrictions"

This page is intentionally left blank.

Project Template	
Energy and Demand Savings Summary	
Measure ID:	**13**
Measure Name:	**Destratification Fans**
Measure Location:	
Engineers:	

Site Name:		**Lafayette ES**	**Ryerson ES**	**Anthony Wayne MS**	**Colfax MS**	**Washington MS**	**Wayne Hills HS**	**Wayne Valley HS**	**Summary**
Item	Units	Savings	Savings	Savings	Savings	Savings	Savings	Savings	
Electricity									
Energy On-Peak	kWh	-103	-189	-718	-295	-351	-1,229	-1,086	-3,971
Energy Off-Peak	kWh								
Energy Total	kWh	-103	-189	-718	-295	-351	-1,229	-1,086	-3,971
Demand On-Peak, Monthly	kW	-0.1	-0.1	-0.2	-0.2	-0.2	-0.4	-0.4	-1.6
Demand On-Peak, Annual	kW	-1.0	-1.4	-2.9	-1.9	-1.9	-4.8	-5.3	-19.2
Demand Off-Peak, Monthly	kW								
Demand Off-Peak, Annual	kW								
Fossil Fuel									
Natural Gas (NG)	Therms	1,296	870	2,624	1,708	2,791	2,492	1,890	13,671
Liquid Propane Gas (LPG)	Gallons								
Steam	Mlbs								
Fuel Oil, #2	Gallons								
Fuel Oil, #4	Gallons								
Fuel Oil, #6	Gallons								
Miscellaneous	Misc								

Project Template
Lafayette-Elementary School
Destratification Fans

TMY-2 Weather Data for Newark, NJ								Existing Occupancy Schedule				Existing Operating Schedule				Existing				Proposed								Savings			
Amb. Temp Bin deg. F	Ave Temp deg. F	M.C.W.B deg. F	M.C. Enthalpy Btu/lbma	01-08 Hours	09-16 Hours	17-24 Hours	Total Bin Hours	Occ On-Peak Hrs.	UnOcc On-Peak Hrs.	Occ Off-Peak Hrs.	UnOcc Off-Peak Hrs.	Occ On-Peak Hrs.	UnOcc On-Peak Hrs.	Occ Off-Peak Hrs.	UnOcc Off-Peak Hrs.	Occ. Cool/ Heat Load (MBH)	UnOcc. Cool/ Heat Load (MBH)	Occ Cooling/Heating Energy Consump. (MMBTU)	UnOcc Cooling/Heating Energy Consump. (MMBTU)	Occ On-Peak Hrs.	UnOcc On-Peak Hrs.	Occ Off-Peak Hrs.	UnOcc Off-Peak Hrs.	Occ. Cool/ Heat Load (MBH)	UnOcc. Cool/ Heat Load (MBH)	Occ Cooling/Heating Energy Consump. (MMBTU)	UnOcc Cooling/Heating Energy Consump. (MMBTU)	Cooling Energy Savings (MMBTU)	Destratification Fan Energy Consumption	HVAC Electrical Savings (kWh)	Heating Energy Savings (MMBTU)
A	**B**	**C**	**D**	**E**	**F**	**G**	**H**	**I**	**J**	**K**	**L**	**M**	**N**	**O**	**P**	**Q**	**R**	**S**	**T**	**U**	**V**	**W**	**X**	**Y**	**Z**	**AA**	**AB**	**AC**		**AD**	**AE**
Cooling																															
105 to 110	107.5	0.0	0.0	0	0	0	0	0	0	0	0	0	0	0	0	1,081	805			0	0	0	0	1,081	805			0	0	0	
100 to 105	102.5	0.0	0.0	0	0	0	0	0	0	0	0	0	0	0	0	973	724			0	0	0	0	973	724			0	0	0	
95 to 100	97.5	72.2	35.7	0	5	1	6	1	1	0	4	2	1	0	4	865	644			1	1	0	4	865	644			0	0	0	
90 to 95	92.5	73.8	37.3	0	33	7	40	9	7	0	24	10	6	0	24	756	563			9	7	0	24	756	563			0	0	0	
85 to 90	87.5	71.3	35.1	0	92	30	122	27	22	0	73	31	18	0	73	648	483			27	22	0	73	648	483			0	0	0	
80 to 85	82.5	69.2	33.2	8	330	162	500	112	91	0	298	128	74	0	298	540	402			112	91	0	298	540	402			0	0	0	
75 to 80	77.5	67.4	31.8	98	257	265	620	138	113	0	369	159	92	0	369	432	322			138	113	0	369	432	322			0	0	0	
70 to 75	72.5	64.6	29.7	325	236	286	847	189	154	0	504	217	125	0	504	324	241			189	154	0	504	324	241			0	0	0	
65 to 70	67.5	60.9	27.0	251	204	216	671	150	122	0	399	172	99	0	399	216	161			150	122	0	399	216	161			0	0	0	
60 to 65	62.5	56.3	24.0	358	268	301	927	207	168	0	552	238	137	0	552	108	80			207	168	0	552	108	80			0	0	0	
Heating																															
55 to 60	57.5	50.3	20.4	217	191	192	600	134	109	0	357	154	89	0	357	(412)	(201)	72	123	134	109	0	357	(294)	0	51	0		(12)	0	11
50 to 55	52.5	46.4	18.3	218	223	289	730	163	133	0	435	187	108	0	435	(554)	(335)	118	250	163	133	0	435	(431)	(82)	92	61		(15)	0	16
45 to 50	47.5	41.8	16.0	243	196	195	634	142	115	0	377	163	94	0	377	(696)	(469)	129	304	142	115	0	377	(570)	(206)	106	134		(13)	0	14
40 to 45	42.5	38.0	14.3	193	171	149	513	115	93	0	305	132	76	0	305	(839)	(602)	126	316	115	93	0	305	(710)	(316)	106	166		(11)	0	13
35 to 40	37.5	33.9	12.5	357	311	355	1,023	228	186	0	609	263	152	0	609	(981)	(736)	294	770	228	186	0	609	(850)	(420)	255	439		(21)	0	27
30 to 35	32.5	29.3	10.6	277	221	236	734	164	133	0	437	188	109	0	437	(1,123)	(870)	242	653	164	133	0	437	(991)	(522)	213	392		(15)	0	21
25 to 30	27.5	24.3	8.7	159	98	134	391	87	71	0	233	100	58	0	233	(1,265)	(1,004)	145	401	87	71	0	233	(1,132)	(623)	129	249		(8)	0	12
20 to 25	22.5	19.3	6.8	89	48	58	195	44	35	0	116	50	29	0	116	(1,407)	(1,138)	80	227	44	35	0	116	(1,273)	(724)	72	144		(4)	0	7
15 to 20	17.5	14.8	5.3	74	20	31	125	28	23	0	74	32	19	0	74	(1,549)	(1,272)	56	162	28	23	0	74	(1,415)	(823)	51	105		(3)	0	5
10 to 15	12.5	10.0	3.8	35	7	5	47	10	9	0	28	12	7	0	28	(1,691)	(1,406)	23	67	10	9	0	28	(1,556)	(923)	21	44		(1)	0	2
5 to 10	7.5	5.1	2.3	17	9	8	34	8	6	0	20	9	5	0	20	(1,834)	(1,540)	18	53	8	6	0	20	(1,698)	(1,022)	16	35		(1)	0	1
0 to 5	2.5	0.6	1.0	1	0	0	1	0	0	0	1	0	0	0	1	(1,976)	(1,673)	0	2	0	0	0	1	(1,840)	(1,121)	0	1		(0)	0	0
-5 to 0	(2.5)	0.0	0.0	0	0	0	0	0	0	0	0	0	0	0	0	(2,118)	(1,807)	0	0	0	0	0	0	(1,981)	(1,220)	0	0		0	0	0
-10 to -5	(7.5)	0.0	0.0	0	0	0	0	0	0	0	0	0	0	0	0	(2,260)	(1,941)	0	0	0	0	0	0	(2,123)	(1,319)	0	0		0	0	0
-15 to -10	(12.5)	0.0	0.0	0	0	0	0	0	0	0	0	0	0	0	0	(2,402)	(2,075)	0	0	0	0	0	0	(2,265)	(1,418)	0	0		0	0	0
-20 to -15	(17.5)	0.0	0.0	0	0	0	0	0	0	0	0	0	0	0	0	(2,544)	(2,209)	0	0	0	0	0	0	(2,407)	(1,516)	0	0		0	0	0
-25 to -20	(22.5)	0.0	0.0	0	0	0	0	0	0	0	0	0	0	0	0	(2,686)	(2,343)	0	0	0	0	0	0	(2,549)	(1,615)	0	0		0	0	0
				2,920	2,920	2,920	8,760	1,955	1,591	0	5,214	2,249	1,297	0	5,214			1,303	3,328	1,955	1,591	0	5,214			1,114	1,771	0	(103)	0	130

Cell Ref.	Comment
A-H	TMY-2 Weather Data for Newark, NJ
I - L	Existing Occupancy hours
M - P	Existing Operating hours
Q	Occupied Cooling and Heating loads (MBH)
R	Unoccupied Cooling and Heating loads (MBH)
S	= -[col Q] x ([col I] + [col K]) / 1,000 / Z45
T	= -[col R] x ([col J] + [col L]) / 1,000 / Z45
U - X	Proposed Operating hours
Y	Proposed Occupied Cooling and Heating Loads:
	= ([col B] - Y59) / ([col B] - Y54) x [col Q]
	= ([col B] - AA59) / ([col B] - AA54) x [col Q]
Z	Proposed Unoccupied Cooling and Heating Loads:
	= ([col B] - Y60) / ([col B] - Y55) x [col R]
	= ([col B] - AA60) / ([col B] - AA55) x [col R]
AA	= [col Y] x ([col U] + [col W]) / 1,000 / Z45
AB	= [col Z] x ([col V] + [col X]) / 1,000 / Z45
AC	= ([col S] + [col T]) - ([col AA] + [col AB])
AD	HVAC Fan and Pump Savings
AE	= ([col S] + [col T]) - ([col AA] + [col AB])

Assumptions:	Value	Unit	CELL	Description
			REF	
Occupied Area	46,480	SF	Z43	
Destratification Fan Area	3,450	SF	Z44	
Existing Heating Plant Efficiency	76.0%		Z45	
Heating Pump Power	0.0	kW	Z46	
Gym Fan Power	0.0	kW	Z47	
Destratification Fan Power	0.04	kW	Z48	
Quantity of Destratification Fans	2.0		Z49	

Average Existing Space Temperatures					
	Cooling		Heating		Description
Occupied	76.0	Y54	75.0	AA54	
UnOccupied	85.0	Y55	60.0	AA55	

Average Proposed Space Temperatures					
	Cooling		Heating		Description
Occupied	76.0	Y59	70.0	AA59	
UnOccupied	85.0	Y60	55.0	AA60	

Page content is subject to Confidentiality Restrictions

Project Template
Ryerson-Elementary School
Destratification Fans

TMY-2 Weather Data for Newark, NJ								Existing Occupancy Schedule				Existing Operating Schedule				Existing				Proposed								Savings			
Amb. Temp Bin deg. F	Ave Temp deg. F	M.C.W.B deg. F	M.C. Enthalpy Btu/lbma	01-08 Hours	09-16 Hours	17-24 Hours	Total Bin Hours	Occ On-Peak Hrs.	UnOcc On-Peak Hrs.	Occ Off-Peak Hrs.	UnOcc Off-Peak Hrs.	Occ On-Peak Hrs.	UnOcc On-Peak Hrs.	Occ Off-Peak Hrs.	UnOcc Off-Peak Hrs.	Occ. Cool/ Heat Load (MBH)	UnOcc. Cool/ Heat Load (MBH)	Occ Cooling/Heating Energy Consump. (MMBTU)	UnOcc Cooling/Heating Energy Consump. (MMBTU)	Occ On-Peak Hrs.	UnOcc On-Peak Hrs.	Occ Off-Peak Hrs.	UnOcc Off-Peak Hrs.	Occ. Cool/ Heat Load (MBH)	UnOcc. Cool/ Heat Load (MBH)	Occ Cooling/Heating Energy Consump. (MMBTU)	UnOcc Cooling/Heating Energy Consump. (MMBTU)	Cooling Energy Savings (MMBTU)	Destratification Fan Energy Consumption	HVAC Electrical Savings (kWh)	Heating Energy Savings (MMBTU)
A	**B**	**C**	**D**	**E**	**F**	**G**	**H**	**I**	**J**	**K**	**L**	**M**	**N**	**O**	**P**	**Q**	**R**	**S**	**T**	**U**	**V**	**W**	**X**	**Y**	**Z**	**AA**	**AB**	**AC**		**AD**	**AE**
Cooling																															
105 to 110	107.5	0.0	0.0	0	0	0	0	0	0	0	0	0	0	0	0	438	326			0	0	0	0	438	326			0	0	0	
100 to 105	102.5	0.0	0.0	0	0	0	0	0	0	0	0	0	0	0	0	394	293			0	0	0	0	394	293			0	0	0	
95 to 100	97.5	72.2	35.7	0	5	1	6	1	1	0	4	2	1	0	4	350	261			1	1	0	4	350	261			0	0	0	
90 to 95	92.5	73.8	37.3	0	33	7	40	9	7	0	24	13	4	0	24	306	228			9	7	0	24	306	228			0	0	0	
85 to 90	87.5	71.3	35.1	0	92	30	122	29	21	0	73	38	11	0	73	263	196			29	21	0	73	263	196			0	0	0	
80 to 85	82.5	69.2	33.2	8	330	162	500	117	85	0	298	156	46	0	298	219	163			117	85	0	298	219	163			0	0	0	
75 to 80	77.5	67.4	31.8	98	257	265	620	145	106	0	369	194	57	0	369	175	130			145	106	0	369	175	130			0	0	0	
70 to 75	72.5	64.6	29.7	325	236	286	847	199	144	0	504	265	78	0	504	131	98			199	144	0	504	131	98			0	0	0	
65 to 70	67.5	60.9	27.0	251	204	216	671	157	114	0	399	210	62	0	399	88	65			157	114	0	399	88	65			0	0	0	
60 to 65	62.5	56.3	24.0	358	268	301	927	217	158	0	552	290	86	0	552	44	33			217	158	0	552	44	33			0	0	0	
Heating																															
55 to 60	57.5	50.3	20.4	217	191	192	600	141	102	0	357	188	55	0	357	(375)	(166)	69	101	141	102	0	357	(268)	0	49	0		(23)	5	11
50 to 55	52.5	46.4	18.3	218	223	289	730	171	124	0	435	228	67	0	435	(505)	(264)	113	194	171	124	0	435	(393)	(84)	88	62		(27)	6	14
45 to 50	47.5	41.8	16.0	243	196	195	634	149	108	0	377	198	59	0	377	(634)	(362)	124	231	149	108	0	377	(519)	(207)	101	132		(24)	6	11
40 to 45	42.5	38.0	14.3	193	171	149	513	120	87	0	305	160	47	0	305	(764)	(460)	120	238	120	87	0	305	(646)	(313)	102	162		(19)	5	9
35 to 40	37.5	33.9	12.5	357	311	355	1,023	240	174	0	609	320	94	0	609	(893)	(558)	281	575	240	174	0	609	(774)	(414)	244	426		(38)	9	17
30 to 35	32.5	29.3	10.6	277	221	236	734	172	125	0	437	229	68	0	437	(1,023)	(656)	231	485	172	125	0	437	(903)	(512)	204	378		(28)	0	12
25 to 30	27.5	24.3	8.7	159	98	134	391	92	67	0	233	122	36	0	233	(1,152)	(754)	138	297	92	67	0	233	(1,031)	(608)	124	240		(15)	0	7
20 to 25	22.5	19.3	6.8	89	48	58	195	46	33	0	116	61	18	0	116	(1,282)	(851)	77	167	46	33	0	116	(1,160)	(704)	69	138		(7)	0	3
15 to 20	17.5	14.8	5.3	74	20	31	125	29	21	0	74	39	12	0	74	(1,411)	(949)	54	119	29	21	0	74	(1,289)	(799)	49	101		(5)	0	2
10 to 15	12.5	10.0	3.8	35	7	5	47	11	8	0	28	15	4	0	28	(1,541)	(1,047)	22	50	11	8	0	28	(1,417)	(894)	20	42		(2)	0	1
5 to 10	7.5	5.1	2.3	17	9	8	34	8	6	0	20	11	3	0	20	(1,670)	(1,145)	17	39	8	6	0	20	(1,547)	(988)	16	34		(1)	0	1
0 to 5	2.5	0.6	1.0	1	0	0	1	0	0	0	1	0	0	0	1	(1,800)	(1,243)	0	1	0	0	0	1	(1,676)	(1,082)	0	1		(0)	0	0
-5 to 0	(2.5)	0.0	0.0	0	0	0	0	0	0	0	0	0	0	0	0	(1,929)	(1,341)	0	0	0	0	0	0	(1,805)	(1,177)	0	0		0	0	0
-10 to -5	(7.5)	0.0	0.0	0	0	0	0	0	0	0	0	0	0	0	0	(2,059)	(1,439)	0	0	0	0	0	0	(1,934)	(1,271)	0	0		0	0	0
-15 to -10	(12.5)	0.0	0.0	0	0	0	0	0	0	0	0	0	0	0	0	(2,188)	(1,536)	0	0	0	0	0	0	(2,063)	(1,364)	0	0		0	0	0
-20 to -15	(17.5)	0.0	0.0	0	0	0	0	0	0	0	0	0	0	0	0	(2,318)	(1,634)	0	0	0	0	0	0	(2,192)	(1,458)	0	0		0	0	0
-25 to -20	(22.5)	0.0	0.0	0	0	0	0	0	0	0	0	0	0	0	0	(2,447)	(1,732)	0	0	0	0	0	0	(2,322)	(1,552)	0	0		0	0	0
				2,920	2,920	2,920	8,760	2,053	1,493	0	5,214	2,738	809	0	5,214			1,247	2,497	2,053	1,493	0	5,214			1,066	1,716	0	(189)	31	87

Cell Ref.	Comment
A-H	TMY-2 Weather Data for Newark, NJ
I - L	Existing Occupancy hours
M - P	Existing Operating hours
Q	Occupied Cooling and Heating loads (MBH)
R	Unoccupied Cooling and Heating loads (MBH)
S	= -[col Q] x ([col I] + [col K]) / 1,000 / Z45
T	= -[col R] x ([col J] + [col L]) / 1,000 / Z45
U - X	Proposed Operating hours
Y	Proposed Occupied Cooling and Heating Loads:
	= ([col B] - Y59) / ([col B] - Y54) x [col Q]
	= ([col B] - AA59) / ([col B] - AA54) x [col Q]
Z	Proposed Unoccupied Cooling and Heating Loads:
	= ([col B] - Y60) / ([col B] - Y55) x [col R]
	= ([col B] - AA60) / ([col B] - AA55) x [col R]
AA	= [col Y] x ([col U] + [col W]) / 1,000 / Z45
AB	= [col Z] x ([col V] + [col X]) / 1,000 / Z45
AC	= ([col S] + [col T]) - ([col AA] + [col AB])
AD	HVAC Fan and Pump Savings
AE	= ([col S] + [col T]) - ([col AA] + [col AB])

Assumptions:	Value	Unit	CELL	Description
			REF	
Occupied Area	48,634	SF	Z43	
Destratification Fan Area	4,400	SF	Z44	
Existing Heating Plant Efficiency	76.0%		Z45	
Heating Pump Power	1.3	kW	Z46	
Gym Fan Power	0.0	kW	Z47	
Destratification Fan Power	0.04	kW	Z48	
Quantity of Destratification Fans	3.0		Z49	

Average Existing Space Temperatures					
	Cooling		Heating		Description
Occupied	76.0	Y54	75.0	AA54	
UnOccupied	85.0	Y55	60.0	AA55	

Average Proposed Space Temperatures					
	Cooling		Heating		Description
Occupied	76.0	Y59	70.0	AA59	
UnOccupied	85.0	Y60	55.0	AA60	

Page content is subject to Confidentiality Restrictions

Project Template
Anthony Wayne-Middle School
Destratification Fans

TMY-2 Weather Data for Newark, NJ								Existing Occupancy Schedule				Existing Operating Schedule				Existing				Proposed								Savings			
Amb. Temp Bin deg. F	Ave Temp deg. F	M.C.W.B deg. F	M.C. Enthalpy Btu/lbma	01-08 Hours	09-16 Hours	17-24 Hours	Total Bin Hours	Occ On-Peak Hrs.	UnOcc On-Peak Hrs.	Occ Off-Peak Hrs.	UnOcc Off-Peak Hrs.	Occ On-Peak Hrs.	UnOcc On-Peak Hrs.	Occ Off-Peak Hrs.	UnOcc Off-Peak Hrs.	Occ. Cool/ Heat Load (MBH)	UnOcc. Cool/ Heat Load (MBH)	Occ Cooling/Heating Energy Consump. (MMBTU)	UnOcc Cooling/Heating Energy Consump. (MMBTU)	Occ On-Peak Hrs.	UnOcc On-Peak Hrs.	Occ Off-Peak Hrs.	UnOcc Off-Peak Hrs.	Occ. Cool/ Heat Load (MBH)	UnOcc. Cool/ Heat Load (MBH)	Occ Cooling/Heating Energy Consump. (MMBTU)	UnOcc Cooling/Heating Energy Consump. (MMBTU)	Cooling Energy Savings (MMBTU)	Destratification Fan Energy Consumption	HVAC Electrical Savings (kWh)	Heating Energy Savings (MMBTU)
A	**B**	**C**	**D**	**E**	**F**	**G**	**H**	**I**	**J**	**K**	**L**	**M**	**N**	**O**	**P**	**Q**	**R**	**S**	**T**	**U**	**V**	**W**	**X**	**Y**	**Z**	**AA**	**AB**	**AC**		**AD**	**AE**
Cooling																															
105 to 110	107.5	0.0	0.0	0	0	0	0	0	0	0	0	0	0	0	0	4,663	3,473			0	0	0	0	4,663	3,473			0	0	0	
100 to 105	102.5	0.0	0.0	0	0	0	0	0	0	0	0	0	0	0	0	4,197	3,125			0	0	0	0	4,197	3,125			0	0	0	
95 to 100	97.5	72.2	35.7	0	5	1	6	2	0	1	3	2	0	1	2	3,731	2,778			2	0	1	3	3,731	2,778			0	0	0	
90 to 95	92.5	73.8	37.3	0	33	7	40	16	0	4	20	16	0	8	16	3,264	2,431			16	0	4	20	3,264	2,431			0	0	0	
85 to 90	87.5	71.3	35.1	0	92	30	122	49	0	11	61	49	0	23	49	2,798	2,084			49	0	11	61	2,798	2,084			0	0	0	
80 to 85	82.5	69.2	33.2	8	330	162	500	202	0	46	252	202	0	95	202	2,332	1,736			202	0	46	252	2,332	1,736			0	0	0	
75 to 80	77.5	67.4	31.8	98	257	265	620	251	0	57	312	251	0	118	251	1,865	1,389			251	0	57	312	1,865	1,389			0	0	0	
70 to 75	72.5	64.6	29.7	325	236	286	847	343	0	77	427	343	0	161	343	1,399	1,042			343	0	77	427	1,399	1,042			0	0	0	
65 to 70	67.5	60.9	27.0	251	204	216	671	272	0	61	338	272	0	128	272	933	695			272	0	61	338	933	695			0	0	0	
60 to 65	62.5	56.3	24.0	358	268	301	927	375	0	85	467	375	0	177	375	466	347			375	0	85	467	466	347			0	0	0	
Heating																															
55 to 60	57.5	50.3	20.4	217	191	192	600	243	0	55	302	243	0	114	243	(936)	(705)	366	280	243	0	55	302	(669)	0	261	0		(86)	56	27
50 to 55	52.5	46.4	18.3	218	223	289	730	296	0	67	368	296	0	139	295	(1,239)	(987)	589	478	296	0	67	368	(963)	(228)	458	111		(104)	69	35
45 to 50	47.5	41.8	16.0	243	196	195	634	257	0	58	320	257	0	121	257	(1,541)	(1,269)	636	533	257	0	58	320	(1,260)	(529)	521	222		(91)	60	30
40 to 45	42.5	38.0	14.3	193	171	149	513	208	0	47	259	208	0	98	208	(1,843)	(1,551)	616	528	208	0	47	259	(1,559)	(769)	521	262		(73)	48	25
35 to 40	37.5	33.9	12.5	357	311	355	1,023	414	0	93	516	414	0	195	414	(2,145)	(1,833)	1,431	1,244	414	0	93	516	(1,859)	(990)	1,240	672		(146)	96	54
30 to 35	32.5	29.3	10.6	277	221	236	734	297	0	67	370	297	0	140	297	(2,447)	(2,115)	1,171	1,029	297	0	67	370	(2,159)	(1,202)	1,033	585		(105)	0	41
25 to 30	27.5	24.3	8.7	159	98	134	391	158	0	36	197	158	0	74	158	(2,749)	(2,397)	701	621	158	0	36	197	(2,460)	(1,409)	627	365		(56)	0	23
20 to 25	22.5	19.3	6.8	89	48	58	195	79	0	18	98	79	0	37	79	(3,051)	(2,679)	387	346	79	0	18	98	(2,760)	(1,613)	350	208		(28)	0	12
15 to 20	17.5	14.8	5.3	74	20	31	125	51	0	11	63	51	0	24	51	(3,353)	(2,961)	273	245	51	0	11	63	(3,061)	(1,815)	249	150		(18)	0	8
10 to 15	12.5	10.0	3.8	35	7	5	47	19	0	4	24	19	0	9	19	(3,655)	(3,243)	111	101	19	0	4	24	(3,363)	(2,015)	102	63		(7)	0	3
5 to 10	7.5	5.1	2.3	17	9	8	34	14	0	3	17	14	0	6	14	(3,957)	(3,525)	87	79	14	0	3	17	(3,664)	(2,215)	80	50		(5)	0	3
0 to 5	2.5	0.6	1.0	1	0	0	1	0	0	0	1	0	0	0	0	(4,259)	(3,808)	2	2	0	0	0	1	(3,966)	(2,414)	2	2		(0)	0	0
-5 to 0	(2.5)	0.0	0.0	0	0	0	0	0	0	0	0	0	0	0	0	(4,561)	(4,090)	0	0	0	0	0	0	(4,267)	(2,613)	0	0		0	0	0
-10 to -5	(7.5)	0.0	0.0	0	0	0	0	0	0	0	0	0	0	0	0	(4,863)	(4,372)	0	0	0	0	0	0	(4,569)	(2,811)	0	0		0	0	0
-15 to -10	(12.5)	0.0	0.0	0	0	0	0	0	0	0	0	0	0	0	0	(5,166)	(4,654)	0	0	0	0	0	0	(4,870)	(3,009)	0	0		0	0	0
-20 to -15	(17.5)	0.0	0.0	0	0	0	0	0	0	0	0	0	0	0	0	(5,468)	(4,936)	0	0	0	0	0	0	(5,172)	(3,206)	0	0		0	0	0
-25 to -20	(22.5)	0.0	0.0	0	0	0	0	0	0	0	0	0	0	0	0	(5,770)	(5,218)	0	0	0	0	0	0	(5,474)	(3,404)	0	0		0	0	0
				2,920	2,920	2,920	8,760	3,546	0	799	4,415	3,546	0	1,668	3,546			6,370	5,488	3,546	0	799	4,415			5,444	2,689	0	(718)	329	262

Cell Ref.	Comment
A-H	TMY-2 Weather Data for Newark, NJ
I - L	Existing Occupancy hours
M - P	Existing Operating hours
Q	Occupied Cooling and Heating loads (MBH)
R	Unoccupied Cooling and Heating loads (MBH)
S	= -[col Q] x ([col I] + [col K]) / 1,000 / Z45
T	= -[col R] x ([col J] + [col L]) / 1,000 / Z45
U - X	Proposed Operating hours
Y	Proposed Occupied Cooling and Heating Loads:
	= ([col B] - Y59) / ([col B] - Y54) x [col Q]
	= ([col B] - AA59) / ([col B] - AA54) x [col Q]
Z	Proposed Unoccupied Cooling and Heating Loads:
	= ([col B] - Y60) / ([col B] - Y55) x [col R]
	= ([col B] - AA60) / ([col B] - AA55) x [col R]
AA	= [col Y] x ([col U] + [col W]) / 1,000 / Z45
AB	= [col Z] x ([col V] + [col X]) / 1,000 / Z45
AC	= ([col S] + [col T]) - ([col AA] + [col AB])
AD	HVAC Fan and Pump Savings
AE	= ([col S] + [col T]) - ([col AA] + [col AB])

Assumptions:	Value	Unit	CELL REF	Description
Occupied Area	108,813	SF	Z43	
Destratification Fan Area	7,665	SF	Z44	
Existing Heating Plant Efficiency	76.0%		Z45	
Heating Pump Power	13.4	kW	Z46	
Gym Fan Power	0.0	kW	Z47	
Destratification Fan Power	0.04	kW	Z48	
Quantity of Destratification Fans	6.0		Z49	

Average Existing Space Temperatures	Cooling		Heating		Description
Occupied	76.0	Y54	75.0	AA54	
UnOccupied	85.0	Y55	60.0	AA55	

Average Proposed Space Temperatures	Cooling		Heating		Description
Occupied	76.0	Y59	70.0	AA59	
UnOccupied	85.0	Y60	55.0	AA60	

Page content is subject to Confidentiality Restrictions

Project Template
Schuyler-Colfax-Middle School
Destratification Fans

TMY-2 Weather Data for Newark, NJ								Existing Occupancy Schedule				Existing Operating Schedule				Existing				Proposed								Savings			
Amb. Temp Bin deg. F	Ave Temp deg. F	M.C.W.B deg. F	M.C. Enthalpy Btu/lbma	01-08 Hours	09-16 Hours	17-24 Hours	Total Bin Hours	Occ On-Peak Hrs.	UnOcc On-Peak Hrs.	Occ Off-Peak Hrs.	UnOcc Off-Peak Hrs.	Occ On-Peak Hrs.	UnOcc On-Peak Hrs.	Occ Off-Peak Hrs.	UnOcc Off-Peak Hrs.	Occ. Cool/ Heat Load (MBH)	UnOcc. Cool/ Heat Load (MBH)	Occ Cooling/Heating Energy Consump. (MMBTU)	UnOcc Cooling/Heating Energy Consump. (MMBTU)	Occ On-Peak Hrs.	UnOcc On-Peak Hrs.	Occ Off-Peak Hrs.	UnOcc Off-Peak Hrs.	Occ. Cool/ Heat Load (MBH)	UnOcc. Cool/ Heat Load (MBH)	Occ Cooling/Heating Energy Consump. (MMBTU)	UnOcc Cooling/Heating Energy Consump. (MMBTU)	Cooling Energy Savings (MMBTU)	Destratification Fan Energy Consumption	HVAC Electrical Savings (kWh)	Heating Energy Savings (MMBTU)
A	**B**	**C**	**D**	**E**	**F**	**G**	**H**	**I**	**J**	**K**	**L**	**M**	**N**	**O**	**P**	**Q**	**R**	**S**	**T**	**U**	**V**	**W**	**X**	**Y**	**Z**	**AA**	**AB**	**AC**		**AD**	**AE**
Cooling																															
105 to 110	107.5	0.0	0.0	0	0	0	0	0	0	0	0	0	0	0	0	877	653			0	0	0	0	877	653			0	0	0	
100 to 105	102.5	0.0	0.0	0	0	0	0	0	0	0	0	0	0	0	0	789	588			0	0	0	0	789	588			0	0	0	
95 to 100	97.5	72.2	35.7	0	5	1	6	2	1	0	4	2	0	0	4	701	522			2	1	0	4	701	522			0	0	0	
90 to 95	92.5	73.8	37.3	0	33	7	40	13	3	0	24	15	2	0	24	614	457			13	3	0	24	614	457			0	0	0	
85 to 90	87.5	71.3	35.1	0	92	30	122	39	11	0	73	45	5	0	73	526	392			39	11	0	73	526	392			0	0	0	
80 to 85	82.5	69.2	33.2	8	330	162	500	159	44	0	298	184	19	0	298	438	326			159	44	0	298	438	326			0	0	0	
75 to 80	77.5	67.4	31.8	98	257	265	620	197	54	0	369	228	23	0	369	351	261			197	54	0	369	351	261			0	0	0	
70 to 75	72.5	64.6	29.7	325	236	286	847	269	74	0	504	311	32	0	504	263	196			269	74	0	504	263	196			0	0	0	
65 to 70	67.5	60.9	27.0	251	204	216	671	213	59	0	399	246	25	0	399	175	131			213	59	0	399	175	131			0	0	0	
60 to 65	62.5	56.3	24.0	358	268	301	927	294	81	0	552	340	35	0	552	88	65			294	81	0	552	88	65			0	0	0	
Heating																															
55 to 60	57.5	50.3	20.4	217	191	192	600	190	52	0	357	220	23	0	357	(807)	(311)	191	159	190	52	0	357	(576)	0	136	0		(35)	19	12
50 to 55	52.5	46.4	18.3	218	223	289	730	232	64	0	435	268	28	0	435	(1,106)	(593)	319	369	232	64	0	435	(860)	(136)	248	85		(43)	23	19
45 to 50	47.5	41.8	16.0	243	196	195	634	201	55	0	377	233	24	0	377	(1,404)	(875)	352	473	201	55	0	377	(1,149)	(362)	288	195		(37)	20	18
40 to 45	42.5	38.0	14.3	193	171	149	513	163	45	0	305	188	19	0	305	(1,703)	(1,157)	345	506	163	45	0	305	(1,441)	(569)	292	249		(30)	16	17
35 to 40	37.5	33.9	12.5	357	311	355	1,023	325	89	0	609	376	39	0	609	(2,002)	(1,440)	811	1,256	325	89	0	609	(1,735)	(771)	703	673		(60)	32	37
30 to 35	32.5	29.3	10.6	277	221	236	734	233	64	0	437	269	28	0	437	(2,301)	(1,722)	669	1,078	233	64	0	437	(2,030)	(970)	590	607		(43)	0	30
25 to 30	27.5	24.3	8.7	159	98	134	391	124	34	0	233	144	15	0	233	(2,599)	(2,004)	402	668	124	34	0	233	(2,326)	(1,168)	359	389		(23)	0	17
20 to 25	22.5	19.3	6.8	89	48	58	195	62	17	0	116	72	7	0	116	(2,898)	(2,287)	223	380	62	17	0	116	(2,622)	(1,364)	202	227		(11)	0	9
15 to 20	17.5	14.8	5.3	74	20	31	125	40	11	0	74	46	5	0	74	(3,197)	(2,569)	157	274	40	11	0	74	(2,919)	(1,561)	143	166		(7)	0	7
10 to 15	12.5	10.0	3.8	35	7	5	47	15	4	0	28	17	2	0	28	(3,496)	(2,851)	64	114	15	4	0	28	(3,216)	(1,757)	59	70		(3)	0	3
5 to 10	7.5	5.1	2.3	17	9	8	34	11	3	0	20	12	1	0	20	(3,795)	(3,133)	50	91	11	3	0	20	(3,514)	(1,952)	46	56		(2)	0	2
0 to 5	2.5	0.6	1.0	1	0	0	1	0	0	0	1	0	0	0	1	(4,093)	(3,416)	0	3	0	0	0	1	(3,811)	(2,147)	0	2		(0)	0	0
-5 to 0	(2.5)	0.0	0.0	0	0	0	0	0	0	0	0	0	0	0	0	(4,392)	(3,698)	0	0	0	0	0	0	(4,109)	(2,343)	0	0		0	0	0
-10 to -5	(7.5)	0.0	0.0	0	0	0	0	0	0	0	0	0	0	0	0	(4,691)	(3,980)	0	0	0	0	0	0	(4,407)	(2,538)	0	0		0	0	0
-15 to -10	(12.5)	0.0	0.0	0	0	0	0	0	0	0	0	0	0	0	0	(4,990)	(4,262)	0	0	0	0	0	0	(4,705)	(2,733)	0	0		0	0	0
-20 to -15	(17.5)	0.0	0.0	0	0	0	0	0	0	0	0	0	0	0	0	(5,289)	(4,545)	0	0	0	0	0	0	(5,003)	(2,928)	0	0		0	0	0
-25 to -20	(22.5)	0.0	0.0	0	0	0	0	0	0	0	0	0	0	0	0	(5,587)	(4,827)	0	0	0	0	0	0	(5,301)	(3,122)	0	0		0	0	0
				2,920	2,920	2,920	8,760	2,781	765	0	5,214	3,215	331	0	5,214			3,583	5,372	2,781	765	0	5,214			3,065	2,720	0	(295)	110	171

Cell Ref.	Comment
A-H	TMY-2 Weather Data for Newark, NJ
I - L	Existing Occupancy hours
M - P	Existing Operating hours
Q	Occupied Cooling and Heating loads (MBH)
R	Unoccupied Cooling and Heating loads (MBH)
S	= -[col Q] x ([col I] + [col K]) / 1,000 / Z45
T	= -[col R] x ([col J] + [col L]) / 1,000 / Z45
U - X	Proposed Operating hours
Y	Proposed Occupied Cooling and Heating Loads:
	= ([col B] - Y59) / ([col B] - Y54) x [col Q]
	= ([col B] - AA59) / ([col B] - AA54) x [col Q]
Z	Proposed Unoccupied Cooling and Heating Loads:
	= ([col B] - Y60) / ([col B] - Y55) x [col R]
	= ([col B] - AA60) / ([col B] - AA55) x [col R]
AA	= [col Y] x ([col U] + [col W]) / 1,000 / Z45
AB	= [col Z] x ([col V] + [col X]) / 1,000 / Z45
AC	= ([col S] + [col T]) - ([col AA] + [col AB])
AD	HVAC Fan and Pump Savings
AE	= ([col S] + [col T]) - ([col AA] + [col AB])

Assumptions:	Value	Unit	CELL REF	Description
Occupied Area	116,894	SF	Z43	
Destratification Fan Area	6,300	SF	Z44	
Existing Heating Plant Efficiency	80.0%		Z45	
Heating Pump Power	11.8	kW	Z46	
Gym Fan Power	0.0	kW	Z47	
Destratification Fan Power	0.04	kW	Z48	
Quantity of Destratification Fans	4.0		Z49	

Average Existing Space Temperatures	Cooling		Heating		Description
Occupied	76.0	Y54	75.0	AA54	
UnOccupied	85.0	Y55	60.0	AA55	

Average Proposed Space Temperatures	Cooling		Heating		Description
Occupied	76.0	Y59	70.0	AA59	
UnOccupied	85.0	Y60	55.0	AA60	

Page content is subject to Confidentiality Restrictions

Project Template
George Washington-Middle School
Destratification Fans

TMY-2 Weather Data for Newark, NJ								Existing Occupancy Schedule				Existing Operating Schedule				Existing				Proposed								Savings			
Amb. Temp Bin deg. F	Ave Temp deg. F	M.C.W.B deg. F	M.C. Enthalpy Btu/lbma	01-08 Hours	09-16 Hours	17-24 Hours	Total Bin Hours	Occ On-Peak Hrs.	UnOcc On-Peak Hrs.	Occ Off-Peak Hrs.	UnOcc Off-Peak Hrs.	Occ On-Peak Hrs.	UnOcc On-Peak Hrs.	Occ Off-Peak Hrs.	UnOcc Off-Peak Hrs.	Occ. Cool/ Heat Load (MBH)	UnOcc. Cool/ Heat Load (MBH)	Occ Cooling/Heating Energy Consump. (MMBTU)	UnOcc Cooling/Heating Energy Consump. (MMBTU)	Occ On-Peak Hrs.	UnOcc On-Peak Hrs.	Occ Off-Peak Hrs.	UnOcc Off-Peak Hrs.	Occ. Cool/ Heat Load (MBH)	UnOcc. Cool/ Heat Load (MBH)	Occ Cooling/Heating Energy Consump. (MMBTU)	UnOcc Cooling/Heating Energy Consump. (MMBTU)	Cooling Energy Savings (MMBTU)	Destratification Fan Energy Consumption	HVAC Electrical Savings (kWh)	Heating Energy Savings (MMBTU)
A	**B**	**C**	**D**	**E**	**F**	**G**	**H**	**I**	**J**	**K**	**L**	**M**	**N**	**O**	**P**	**Q**	**R**	**S**	**T**	**U**	**V**	**W**	**X**	**Y**	**Z**	**AA**	**AB**	**AC**		**AD**	**AE**
Cooling																															
105 to 110	107.5	0.0	0.0	0	0	0	0	0	0	0	0	0	0	0	0	918	684			0	0	0	0	918	684			0	0	0	
100 to 105	102.5	0.0	0.0	0	0	0	0	0	0	0	0	0	0	0	0	827	616			0	0	0	0	827	616			0	0	0	
95 to 100	97.5	72.2	35.7	0	5	1	6	2	0	0	3	2	0	0	3	735	547			2	0	0	3	735	547			0	0	0	
90 to 95	92.5	73.8	37.3	0	33	7	40	16	0	1	23	16	0	1	23	643	479			16	0	1	23	643	479			0	0	0	
85 to 90	87.5	71.3	35.1	0	92	30	122	49	0	4	69	49	0	4	69	551	410			49	0	4	69	551	410			0	0	0	
80 to 85	82.5	69.2	33.2	8	330	162	500	202	0	16	282	202	0	16	282	459	342			202	0	16	282	459	342			0	0	0	
75 to 80	77.5	67.4	31.8	98	257	265	620	251	0	20	349	251	0	20	349	367	274			251	0	20	349	367	274			0	0	0	
70 to 75	72.5	64.6	29.7	325	236	286	847	343	0	27	477	343	0	27	477	276	205			343	0	27	477	276	205			0	0	0	
65 to 70	67.5	60.9	27.0	251	204	216	671	272	0	21	378	272	0	21	378	184	137			272	0	21	378	184	137			0	0	0	
60 to 65	62.5	56.3	24.0	358	268	301	927	375	0	29	522	375	0	29	522	92	68			375	0	29	522	92	68			0	0	0	
Heating																															
55 to 60	57.5	50.3	20.4	217	191	192	600	243	0	19	338	243	0	19	338	(738)	(262)	253	116	243	0	19	338	(527)	0	181	0		(42)	0	16
50 to 55	52.5	46.4	18.3	218	223	289	730	296	0	23	411	296	0	23	411	(1,011)	(552)	423	299	296	0	23	411	(787)	(112)	329	60		(51)	0	29
45 to 50	47.5	41.8	16.0	243	196	195	634	257	0	20	357	257	0	20	357	(1,285)	(843)	467	396	257	0	20	357	(1,051)	(307)	382	144		(44)	0	29
40 to 45	42.5	38.0	14.3	193	171	149	513	208	0	16	289	208	0	16	289	(1,558)	(1,133)	458	431	208	0	16	289	(1,318)	(492)	388	187		(36)	0	27
35 to 40	37.5	33.9	12.5	357	311	355	1,023	414	0	32	576	414	0	32	576	(1,831)	(1,424)	1,075	1,080	414	0	32	576	(1,587)	(673)	932	510		(71)	0	62
30 to 35	32.5	29.3	10.6	277	221	236	734	297	0	23	414	297	0	23	414	(2,105)	(1,715)	886	933	297	0	23	414	(1,857)	(852)	782	464		(51)	0	50
25 to 30	27.5	24.3	8.7	159	98	134	391	158	0	12	220	158	0	12	220	(2,378)	(2,005)	533	581	158	0	12	220	(2,128)	(1,031)	477	299		(27)	0	29
20 to 25	22.5	19.3	6.8	89	48	58	195	79	0	6	110	79	0	6	110	(2,651)	(2,296)	296	332	79	0	6	110	(2,399)	(1,209)	268	175		(14)	0	16
15 to 20	17.5	14.8	5.3	74	20	31	125	51	0	4	70	51	0	4	70	(2,924)	(2,587)	209	240	51	0	4	70	(2,670)	(1,387)	191	128		(9)	0	11
10 to 15	12.5	10.0	3.8	35	7	5	47	19	0	1	26	19	0	1	26	(3,198)	(2,877)	86	100	19	0	1	26	(2,942)	(1,564)	79	54		(3)	0	5
5 to 10	7.5	5.1	2.3	17	9	8	34	14	0	1	19	14	0	1	19	(3,471)	(3,168)	67	80	14	0	1	19	(3,214)	(1,741)	62	44		(2)	0	4
0 to 5	2.5	0.6	1.0	1	0	0	1	0	0	0	1	0	0	0	1	(3,744)	(3,458)	1	2	0	0	0	1	(3,486)	(1,918)	1	1		(0)	0	0
-5 to 0	(2.5)	0.0	0.0	0	0	0	0	0	0	0	0	0	0	0	0	(4,018)	(3,749)	0	0	0	0	0	0	(3,758)	(2,096)	0	0		0	0	0
-10 to -5	(7.5)	0.0	0.0	0	0	0	0	0	0	0	0	0	0	0	0	(4,291)	(4,040)	0	0	0	0	0	0	(4,031)	(2,273)	0	0		0	0	0
-15 to -10	(12.5)	0.0	0.0	0	0	0	0	0	0	0	0	0	0	0	0	(4,564)	(4,330)	0	0	0	0	0	0	(4,303)	(2,449)	0	0		0	0	0
-20 to -15	(17.5)	0.0	0.0	0	0	0	0	0	0	0	0	0	0	0	0	(4,838)	(4,621)	0	0	0	0	0	0	(4,576)	(2,626)	0	0		0	0	0
-25 to -20	(22.5)	0.0	0.0	0	0	0	0	0	0	0	0	0	0	0	0	(5,111)	(4,911)	0	0	0	0	0	0	(4,849)	(2,803)	0	0		0	0	0
				2,920	2,920	2,920	8,760	3,546	0	278	4,936	3,546	0	278	4,936			4,756	4,590	3,546	0	278	4,936			4,070	2,067	0	(351)	0	279

Cell Ref.	Comment
A-H	TMY-2 Weather Data for Newark, NJ
I - L	Existing Occupancy hours
M - P	Existing Operating hours
Q	Occupied Cooling and Heating loads (MBH)
R	Unoccupied Cooling and Heating loads (MBH)
S	= -[col Q] x ([col I] + [col K]) / 1,000 / Z45
T	= -[col R] x ([col J] + [col L]) / 1,000 / Z45
U - X	Proposed Operating hours
Y	Proposed Occupied Cooling and Heating Loads:
	= ([col B] - Y59) / ([col B] - Y54) x [col Q]
	= ([col B] - AA59) / ([col B] - AA54) x [col Q]
Z	Proposed Unoccupied Cooling and Heating Loads:
	= ([col B] - Y60) / ([col B] - Y55) x [col R]
	= ([col B] - AA60) / ([col B] - AA55) x [col R]
AA	= [col Y] x ([col U] + [col W]) / 1,000 / Z45
AB	= [col Z] x ([col V] + [col X]) / 1,000 / Z45
AC	= ([col S] + [col T]) - ([col AA] + [col AB])
AD	HVAC Fan and Pump Savings
AE	= ([col S] + [col T]) - ([col AA] + [col AB])

Assumptions:	Value	Unit	CELL REF	Description
Occupied Area	106,488	SF	Z43	
Destratification Fan Area	9,265	SF	Z44	
Existing Heating Plant Efficiency	76.0%		Z45	
Heating Pump Power	51.2	kW	Z46	
Gym Fan Power	0.0	kW	Z47	
Destratification Fan Power	0.04	kW	Z48	
Quantity of Destratification Fans	4.0		Z49	

Average Existing Space Temperatures	Cooling		Heating		Description
Occupied	76.0	Y54	75.0	AA54	
UnOccupied	85.0	Y55	60.0	AA55	

Average Proposed Space Temperatures	Cooling		Heating		Description
Occupied	76.0	Y59	70.0	AA59	
UnOccupied	85.0	Y60	55.0	AA60	

Page content is subject to Confidentiality Restrictions

Project Template
Wayne Hills-High School
Destratification Fans

TMY-2 Weather Data for Newark, NJ								Existing Occupancy Schedule				Existing Operating Schedule				Existing				Proposed								Savings			
Amb. Temp Bin deg. F	Ave Temp deg. F	M.C.W.B deg. F	M.C. Enthalpy Btu/lbma	01-08 Hours	09-16 Hours	17-24 Hours	Total Bin Hours	Occ On-Peak Hrs.	UnOcc On-Peak Hrs.	Occ Off-Peak Hrs.	UnOcc Off-Peak Hrs.	Occ On-Peak Hrs.	UnOcc On-Peak Hrs.	Occ Off-Peak Hrs.	UnOcc Off-Peak Hrs.	Occ. Cool/ Heat Load (MBH)	UnOcc. Cool/ Heat Load (MBH)	Occ Cooling/Heating Energy Consump. (MMBTU)	UnOcc Cooling/Heating Energy Consump. (MMBTU)	Occ On-Peak Hrs.	UnOcc On-Peak Hrs.	Occ Off-Peak Hrs.	UnOcc Off-Peak Hrs.	Occ. Cool/ Heat Load (MBH)	UnOcc. Cool/ Heat Load (MBH)	Occ Cooling/Heating Energy Consump. (MMBTU)	UnOcc Cooling/Heating Energy Consump. (MMBTU)	Cooling Energy Savings (MMBTU)	Destratification Fan Energy Consumption	HVAC Electrical Savings (kWh)	Heating Energy Savings (MMBTU)
A	**B**	**C**	**D**	**E**	**F**	**G**	**H**	**I**	**J**	**K**	**L**	**M**	**N**	**O**	**P**	**Q**	**R**	**S**	**T**	**U**	**V**	**W**	**X**	**Y**	**Z**	**AA**	**AB**	**AC**		**AD**	**AE**
Cooling																															
105 to 110	107.5	0.0	0.0	0	0	0	0	0	0	0	0	0	0	0	0	4,758	3,543			0	0	0	0	4,758	3,543			0	0	0	
100 to 105	102.5	0.0	0.0	0	0	0	0	0	0	0	0	0	0	0	0	4,282	3,189			0	0	0	0	4,282	3,189			0	0	0	
95 to 100	97.5	72.2	35.7	0	5	1	6	2	0	1	3	2	0	1	2	3,806	2,835			2	0	1	3	3,806	2,835			0	0	0	
90 to 95	92.5	73.8	37.3	0	33	7	40	16	0	6	18	16	0	8	16	3,331	2,480			16	0	6	18	3,331	2,480			0	0	0	
85 to 90	87.5	71.3	35.1	0	92	30	122	49	0	19	54	49	0	25	47	2,855	2,126			49	0	19	54	2,855	2,126			0	0	0	
80 to 85	82.5	69.2	33.2	8	330	162	500	202	0	76	222	202	0	103	194	2,379	1,772			202	0	76	222	2,379	1,772			0	0	0	
75 to 80	77.5	67.4	31.8	98	257	265	620	251	0	94	275	251	0	128	241	1,903	1,417			251	0	94	275	1,903	1,417			0	0	0	
70 to 75	72.5	64.6	29.7	325	236	286	847	343	0	129	376	343	0	175	329	1,427	1,063			343	0	129	376	1,427	1,063			0	0	0	
65 to 70	67.5	60.9	27.0	251	204	216	671	272	0	102	298	272	0	138	261	952	709			272	0	102	298	952	709			0	0	0	
60 to 65	62.5	56.3	24.0	358	268	301	927	375	0	141	411	375	0	191	361	476	354			375	0	141	411	476	354			0	0	0	
Heating																															
55 to 60	57.5	50.3	20.4	217	191	192	600	243	0	91	266	243	0	124	233	(1,538)	(927)	657	316	243	0	91	266	(1,099)	0	469	0		(147)	50	29
50 to 55	52.5	46.4	18.3	218	223	289	730	296	0	111	324	296	0	151	284	(2,004)	(1,368)	1,042	568	296	0	111	324	(1,559)	(389)	810	161		(178)	60	37
45 to 50	47.5	41.8	16.0	243	196	195	634	257	0	96	281	257	0	131	247	(2,470)	(1,810)	1,116	652	257	0	96	281	(2,021)	(926)	913	334		(155)	52	30
40 to 45	42.5	38.0	14.3	193	171	149	513	208	0	78	227	208	0	106	200	(2,936)	(2,251)	1,073	656	208	0	78	227	(2,484)	(1,372)	908	400		(125)	42	24
35 to 40	37.5	33.9	12.5	357	311	355	1,023	414	0	155	454	414	0	211	398	(3,402)	(2,692)	2,482	1,566	414	0	155	454	(2,949)	(1,787)	2,151	1,039		(250)	84	50
30 to 35	32.5	29.3	10.6	277	221	236	734	297	0	111	325	297	0	151	285	(3,868)	(3,134)	2,024	1,308	297	0	111	325	(3,413)	(2,187)	1,786	913		(179)	0	37
25 to 30	27.5	24.3	8.7	159	98	134	391	158	0	59	173	158	0	81	152	(4,334)	(3,575)	1,208	795	158	0	59	173	(3,878)	(2,581)	1,080	574		(96)	0	20
20 to 25	22.5	19.3	6.8	89	48	58	195	79	0	30	86	79	0	40	76	(4,800)	(4,016)	666	445	79	0	30	86	(4,343)	(2,970)	603	329		(48)	0	10
15 to 20	17.5	14.8	5.3	74	20	31	125	51	0	19	55	51	0	26	49	(5,267)	(4,458)	468	317	51	0	19	55	(4,809)	(3,356)	427	238		(31)	0	7
10 to 15	12.5	10.0	3.8	35	7	5	47	19	0	7	21	19	0	10	18	(5,733)	(4,899)	191	131	19	0	7	21	(5,274)	(3,740)	175	100		(11)	0	3
5 to 10	7.5	5.1	2.3	17	9	8	34	14	0	5	15	14	0	7	13	(6,199)	(5,340)	149	103	14	0	5	15	(5,739)	(4,122)	138	80		(8)	0	2
0 to 5	2.5	0.6	1.0	1	0	0	1	0	0	0	0	0	0	0	0	(6,665)	(5,782)	3	3	0	0	0	0	(6,205)	(4,504)	3	2		(0)	0	0
-5 to 0	(2.5)	0.0	0.0	0	0	0	0	0	0	0	0	0	0	0	0	(7,131)	(6,223)	0	0	0	0	0	0	(6,671)	(4,885)	0	0		0	0	0
-10 to -5	(7.5)	0.0	0.0	0	0	0	0	0	0	0	0	0	0	0	0	(7,597)	(6,665)	0	0	0	0	0	0	(7,136)	(5,265)	0	0		0	0	0
-15 to -10	(12.5)	0.0	0.0	0	0	0	0	0	0	0	0	0	0	0	0	(8,063)	(7,106)	0	0	0	0	0	0	(7,602)	(5,645)	0	0		0	0	0
-20 to -15	(17.5)	0.0	0.0	0	0	0	0	0	0	0	0	0	0	0	0	(8,529)	(7,547)	0	0	0	0	0	0	(8,068)	(6,024)	0	0		0	0	0
-25 to -20	(22.5)	0.0	0.0	0	0	0	0	0	0	0	0	0	0	0	0	(8,995)	(7,989)	0	0	0	0	0	0	(8,534)	(6,403)	0	0		0	0	0
				2,920	2,920	2,920	8,760	3,546	0	1,329	3,885	3,546	0	1,807	3,407			11,078	6,859	3,546	0	1,329	3,885			9,462	4,169	0	(1,229)	289	249

Cell Ref.	Comment
A-H	TMY-2 Weather Data for Newark, NJ
I - L	Existing Occupancy hours
M - P	Existing Operating hours
Q	Occupied Cooling and Heating loads (MBH)
R	Unoccupied Cooling and Heating loads (MBH)
S	= -[col Q] x ([col I] + [col K]) / 1,000 / Z45
T	= -[col R] x ([col J] + [col L]) / 1,000 / Z45
U - X	Proposed Operating hours
Y	Proposed Occupied Cooling and Heating Loads:
	= ([col B] - Y59) / ([col B] - Y54) x [col Q]
	= ([col B] - AA59) / ([col B] - AA54) x [col Q]
Z	Proposed Unoccupied Cooling and Heating Loads:
	= ([col B] - Y60) / ([col B] - Y55) x [col R]
	= ([col B] - AA60) / ([col B] - AA55) x [col R]
AA	= [col Y] x ([col U] + [col W]) / 1,000 / Z45
AB	= [col Z] x ([col V] + [col X]) / 1,000 / Z45
AC	= ([col S] + [col T]) - ([col AA] + [col AB])
AD	HVAC Fan and Pump Savings
AE	= ([col S] + [col T]) - ([col AA] + [col AB])

Assumptions:	Value	Unit	CELL	Description
			REF	
Occupied Area	253,766	SF	Z43	
Destratification Fan Area	14,684	SF	Z44	
Existing Heating Plant Efficiency	78.0%		Z45	
Heating Pump Power	26.1	kW	Z46	
Gym Fan Power	0.0	kW	Z47	
Destratification Fan Power	0.04	kW	Z48	
Quantity of Destratification Fans	10.0		Z49	

Average Existing Space Temperatures					
	Cooling		Heating		Description
Occupied	76.0	Y54	75.0	AA54	
UnOccupied	85.0	Y55	60.0	AA55	

Average Proposed Space Temperatures					
	Cooling		Heating		Description
Occupied	76.0	Y59	70.0	AA59	
UnOccupied	85.0	Y60	55.0	AA60	

Page content is subject to Confidentiality Restrictions

Project Template
Wayne Valley-High School
Destratification Fans

TMY-2 Weather Data for Newark, NJ								Existing Occupancy Schedule				Existing Operating Schedule				Existing				Proposed								Savings			
Amb. Temp Bin deg. F	Ave Temp deg. F	M.C.W.B deg. F	M.C. Enthalpy Btu/lbma	01-08 Hours	09-16 Hours	17-24 Hours	Total Bin Hours	Occ On-Peak Hrs.	UnOcc On-Peak Hrs.	Occ Off-Peak Hrs.	UnOcc Off-Peak Hrs.	Occ On-Peak Hrs.	UnOcc On-Peak Hrs.	Occ Off-Peak Hrs.	UnOcc Off-Peak Hrs.	Occ. Cool/ Heat Load (MBH)	UnOcc. Cool/ Heat Load (MBH)	Occ Cooling/Heating Energy Consump. (MMBTU)	UnOcc Cooling/Heating Energy Consump. (MMBTU)	Occ On-Peak Hrs.	UnOcc On-Peak Hrs.	Occ Off-Peak Hrs.	UnOcc Off-Peak Hrs.	Occ. Cool/ Heat Load (MBH)	UnOcc. Cool/ Heat Load (MBH)	Occ Cooling/Heating Energy Consump. (MMBTU)	UnOcc Cooling/Heating Energy Consump. (MMBTU)	Cooling Energy Savings (MMBTU)	Destratification Fan Energy Consumption	HVAC Electrical Savings (kWh)	Heating Energy Savings (MMBTU)
A	**B**	**C**	**D**	**E**	**F**	**G**	**H**	**I**	**J**	**K**	**L**	**M**	**N**	**O**	**P**	**Q**	**R**	**S**	**T**	**U**	**V**	**W**	**X**	**Y**	**Z**	**AA**	**AB**	**AC**		**AD**	**AE**
Cooling																															
105 to 110	107.5	0.0	0.0	0	0	0	0	0	0	0	0	0	0	0	0	1,308	974			0	0	0	0	1,308	974			0	0	0	
100 to 105	102.5	0.0	0.0	0	0	0	0	0	0	0	0	0	0	0	0	1,178	877			0	0	0	0	1,178	877			0	0	0	
95 to 100	97.5	72.2	35.7	0	5	1	6	2	0	1	3	2	0	1	3	1,047	779			2	0	1	3	1,047	779			0	0	0	
90 to 95	92.5	73.8	37.3	0	33	7	40	16	0	3	20	16	0	3	20	916	682			16	0	3	20	916	682			0	0	0	
85 to 90	87.5	71.3	35.1	0	92	30	122	49	0	11	62	49	0	11	62	785	585			49	0	11	62	785	585			0	0	0	
80 to 85	82.5	69.2	33.2	8	330	162	500	202	0	43	254	202	0	43	254	654	487			202	0	43	254	654	487			0	0	0	
75 to 80	77.5	67.4	31.8	98	257	265	620	251	0	53	316	251	0	53	316	523	390			251	0	53	316	523	390			0	0	0	
70 to 75	72.5	64.6	29.7	325	236	286	847	343	0	73	431	343	0	73	431	393	292			343	0	73	431	393	292			0	0	0	
65 to 70	67.5	60.9	27.0	251	204	216	671	272	0	58	341	272	0	58	341	262	195			272	0	58	341	262	195			0	0	0	
60 to 65	62.5	56.3	24.0	358	268	301	927	375	0	80	472	375	0	80	472	131	97			375	0	80	472	131	97			0	0	0	
Heating																															
55 to 60	57.5	50.3	20.4	217	191	192	600	243	0	52	305	243	0	52	305	(1,427)	0	552	0	243	0	52	305	(1,020)	0	394	0		(130)	0	11
50 to 55	52.5	46.4	18.3	218	223	289	730	296	0	63	372	296	0	63	372	(1,888)	(287)	889	140	296	0	63	372	(1,468)	(90)	691	44		(158)	0	21
45 to 50	47.5	41.8	16.0	243	196	195	634	257	0	55	323	257	0	55	323	(2,348)	(765)	960	325	257	0	55	323	(1,921)	(434)	785	184		(137)	0	23
40 to 45	42.5	38.0	14.3	193	171	149	513	208	0	44	261	208	0	44	261	(2,809)	(1,244)	929	427	208	0	44	261	(2,377)	(840)	786	288		(111)	0	20
35 to 40	37.5	33.9	12.5	357	311	355	1,023	414	0	88	521	414	0	88	521	(3,269)	(1,722)	2,159	1,179	414	0	88	521	(2,833)	(1,267)	1,871	868		(221)	0	43
30 to 35	32.5	29.3	10.6	277	221	236	734	297	0	63	374	297	0	63	374	(3,730)	(2,200)	1,767	1,081	297	0	63	374	(3,291)	(1,703)	1,559	837		(159)	0	33
25 to 30	27.5	24.3	8.7	159	98	134	391	158	0	34	199	158	0	34	199	(4,190)	(2,678)	1,057	701	158	0	34	199	(3,749)	(2,144)	945	561		(84)	0	18
20 to 25	22.5	19.3	6.8	89	48	58	195	79	0	17	99	79	0	17	99	(4,651)	(3,157)	584	412	79	0	17	99	(4,208)	(2,588)	528	338		(42)	0	9
15 to 20	17.5	14.8	5.3	74	20	31	125	51	0	11	64	51	0	11	64	(5,111)	(3,635)	411	304	51	0	11	64	(4,667)	(3,034)	375	254		(27)	0	6
10 to 15	12.5	10.0	3.8	35	7	5	47	19	0	4	24	19	0	4	24	(5,572)	(4,113)	167	129	19	0	4	24	(5,126)	(3,481)	154	109		(10)	0	2
5 to 10	7.5	5.1	2.3	17	9	8	34	14	0	3	17	14	0	3	17	(6,032)	(4,592)	131	104	14	0	3	17	(5,585)	(3,929)	121	89		(7)	0	2
0 to 5	2.5	0.6	1.0	1	0	0	1	0	0	0	1	0	0	0	1	(6,493)	(5,070)	2	3	0	0	0	1	(6,045)	(4,378)	2	3		(0)	0	0
-5 to 0	(2.5)	0.0	0.0	0	0	0	0	0	0	0	0	0	0	0	0	(6,953)	(5,548)	0	0	0	0	0	0	(6,505)	(4,828)	0	0		0	0	0
-10 to -5	(7.5)	0.0	0.0	0	0	0	0	0	0	0	0	0	0	0	0	(7,414)	(6,027)	0	0	0	0	0	0	(6,964)	(5,278)	0	0		0	0	0
-15 to -10	(12.5)	0.0	0.0	0	0	0	0	0	0	0	0	0	0	0	0	(7,874)	(6,505)	0	0	0	0	0	0	(7,424)	(5,728)	0	0		0	0	0
-20 to -15	(17.5)	0.0	0.0	0	0	0	0	0	0	0	0	0	0	0	0	(8,335)	(6,983)	0	0	0	0	0	0	(7,884)	(6,179)	0	0		0	0	0
-25 to -20	(22.5)	0.0	0.0	0	0	0	0	0	0	0	0	0	0	0	0	(8,795)	(7,461)	0	0	0	0	0	0	(8,344)	(6,629)	0	0		0	0	0
				2,920	2,920	2,920	8,760	3,546	0	756	4,458	3,546	0	756	4,458			9,610	4,807	3,546	0	756	4,458			8,213	3,575	0	(1,086)	0	189

Cell Ref.	Comment
A-H	TMY-2 Weather Data for Newark, NJ
I - L	Existing Occupancy hours
M - P	Existing Operating hours
Q	Occupied Cooling and Heating loads (MBH)
R	Unoccupied Cooling and Heating loads (MBH)
S	= -[col Q] x ([col I] + [col K]) / 1,000 / Z45
T	= -[col R] x ([col J] + [col L]) / 1,000 / Z45
U - X	Proposed Operating hours
Y	Proposed Occupied Cooling and Heating Loads:
	= ([col B] - Y59) / ([col B] - Y54) x [col Q]
	= ([col B] - AA59) / ([col B] - AA54) x [col Q]
Z	Proposed Unoccupied Cooling and Heating Loads:
	= ([col B] - Y60) / ([col B] - Y55) x [col R]
	= ([col B] - AA60) / ([col B] - AA55) x [col R]
AA	= [col Y] x ([col U] + [col W]) / 1,000 / Z45
AB	= [col Z] x ([col V] + [col X]) / 1,000 / Z45
AC	= ([col S] + [col T]) - ([col AA] + [col AB])
AD	HVAC Fan and Pump Savings
AE	= ([col S] + [col T]) - ([col AA] + [col AB])

Assumptions:	Value	Unit	CELL REF	Description
Occupied Area	268,389	SF	Z43	
Destratification Fan Area	19,292	SF	Z44	
Existing Heating Plant Efficiency	76.0%		Z45	
Heating Pump Power	4.7	kW	Z46	
Gym Fan Power	0.0	kW	Z47	
Destratification Fan Power	0.04	kW	Z48	
Quantity of Destratification Fans	11.0		Z49	

Average Existing Space Temperatures	Cooling		Heating		Description
Occupied	76.0	Y54	75.0	AA54	
UnOccupied	85.0	Y55	60.0	AA55	

Average Proposed Space Temperatures	Cooling		Heating		Description
Occupied	76.0	Y59	70.0	AA59	
UnOccupied	85.0	Y60	55.0	AA60	

Page content is subject to Confidentiality Restrictions

Appendix for ECM 13:
Gym De-Stratification Fans

II. Manufacturer Specification Sheets

"Page content is subject to Confidentiality Restrictions"

This page is intentionally left blank.

1650 38th St, Suite 201W
Boulder, CO 80301
Zoofans.com

Zoo Fan Destratification Fan

Specification Data for Model: H30

Description

The stylish and effective destratification fan – variable speed controllable, ZOO Fans gently bring warm air down from ceilings in cold weather and mix cold, conditioned air in warm weather – for improved creature comfort and lower operating costs.

Motor

- PSC Motor, externally wound, IP44 enclosure
- 30,000 – 40,000 hour lubricated service life
- Power rating: 115V / 60Hz / 0.44A

Housing

- PC ABS Plastic
- Fire Resistant 5vB rated
- UV Treated

Installation Hardware Included

- 8' Main cable with 3/8" threaded end and Gripple
- 12' Stabilization tether and Gripple

Warranty

- 2 Year Parts

Typical Specifications

Destratification fan with airflow of 670 CFM at full speed that operates with a variable speed controllable, externally wound, 1-115V motor. Must have fire resistant enclosure and cannot have exposed blades like a traditional ceiling fan. Blades will have a serrated trailing edge and winglet and shall be constructed of PA6 glass-fiber reinforced plastic. Must be variable speed controllable from a direct digital controller via a 0-10 VDC or 4-20 µA interface or via a direct in-line speed controller. Must include a 200lb safe working load main cable attachment system and a separate cable stabilization tether.

Selection Table

Model	CFM	Wt. (lbs)	Watts	Amps	Volts	Hz	LwA6 dBA
H30	670	15	46	0.44	115	60	68

Accessories

Y/N	Part Num	Description
☐	VS-5A	Variable Speed 5A Controller Operates up to 10 H30 fans
☐	VS-10A	Variable Speed 10A Controller Operates up to 20 H30 fans
☐	AVS-7A	Advanced Variable Speed 7A Controller Operates up to 15 H30 fans 0-10 VDC or 4-20 µA control signal
☐	SB-G12E	12' Stabilization Tether Gripple (additional)

Intertek

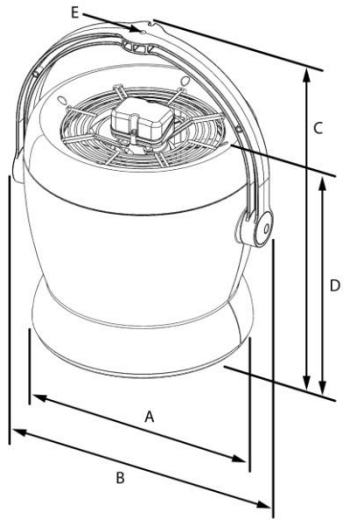

	Inches	Millimeters
A	13-13/16	351.03
B	17-1/2	444.25
C	21-1/5	538.48
D	14-7/8	377.95
E	0.375	9.525

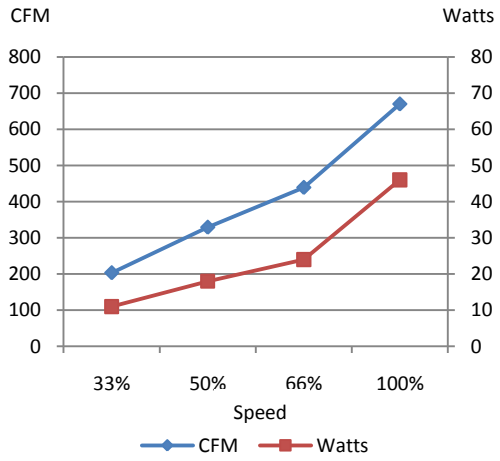

Hanging Height	dBA
20'	44.3
25'	42.4
30'	40.8

Sound level calculations based on non-reflective area

Model	Quantity	Comments	Project:
			Location:
			Architect:
			Engineer:
			Contractor:
			Date:

ECM 14:
Variable Frequency Drives

ECM Overview

Ameresco proposes to install Variable Frequency Drives (VFDs) on the existing constant volume pumps in order to balance the water flow distribution system at the Schuyler Coalfax Middle School. Installing Variable Frequency Drives (VFDs) for these pumps will allow them to maintain pump reduced preset speed thereby reducing pump electrical consumption.

Motor horsepower varies roughly at the cube of motor speed – thus a motor operating at 50% of its rated speed uses approximately 12.5% of its rated horsepower. Lower water flows can be delivered by lowering the pump motor speed thereby lowering the pump motor power consumption.

Figure 14.1: Partially opened valve on hot water pumps at Schuyler Coalfax Middle School

ECM Detail

Existing System

As a result of the conservative design process or changes in the operation of a facility, pumps are often substantially larger than they need to be. Centrifugal pumps can often be oversized because of "rounding up," trying to accommodate gradual increases in pipe surface roughness and flow resistance over time, or anticipating future plant capacity expansions.

Due to this conservative approach, pumps can have operating points completely different from their design points. The pump head is often less than expected, while the flow rate is greater. Balancers often close a balance valve or shut off valve down stream of the pump to add head to the pump and reduce the flow of water. This process is known as throttling. The increased head losses due to the throttling valve (balance valve) results in higher energy consumption by the pump.

"Page content is subject to Confidentiality Restrictions"

Proposed System

In order to reduce the energy consumption of the heating hot water pumps, Ameresco proposes to install five new 7.5 hp variable frequency drives on the pumps the Schuyler Coalfax Middle School. For water balancing, establish the water flow of the pump with the balancing valves in their current position using an ultrasonic flow meter (called the Baseline Flow Condition). After installation of the VFD, open the balancing valve (triple duty valve) to 100% open. Decrease the pump speed setting on the VFD until the flow reaches the Baseline Flow Condition. For the installation of the VFDs, assume they will be mounted at the pump within sight of the existing disconnect. Provide mounting rack for the drives.

- *Energy Savings*

The variable frequency drives reduce energy consumption of a centrifugal pump by changing the speed of the motor driving the impeller. On these centrifugal devices the theoretical input power varies with the cube of pump speed and volume. For example, a pump operating at half speed will theoretically require only about 13 percent of full speed power. If there are no system losses, friction or static head, the application of the theoretical power is justified (cooling tower fans).

Overview Scope of Work:

- Complete turnkey installation of Variable Frequency Drive (VFD) at Schuyler Coalfax Middle School on existing chilled and condenser water circulating pumps serving the buildings chilled water system.
- For systems with triple duty valves the valves will be fully opened and speed of the VFD will be set to properly balance hot water flow rate.
- Tie each VFD into building Direct Digital Control System (DDC)
- The system shall consist of one VFD per pump (one on Lead pump and one Lag pump).

- *Install VFD Unit:*

- Provide & Install Unit in accordance with manufacturer's specifications.
- Provide and install wiring
- Furnish factory-authorized startup.
- Provide one year parts and labor warranty on all components.

Note: All existing electrical infrastructure is assumed to be in good condition and will be re-used. Any repair beyond the given scope is excluded.

Table 14.1 Proposed VFD schedule

Design	Location	Medium	Motor RPM	Motor HP	GPM	Voltage
P1 & P2	Schuyler Coalfax	Heating hot water	1725	7.5	169	208
P3 & P4 & P5	Schuyler Coalfax	Heating hot water	1725	7.5	190	208

Equipment, Design and Construction Documentation

Equipment will be identified in submittals provided to District for approval prior to procurement. Documents will be submitted to the engineering maintenance department, for their review and comment. Upon approval, these will constitute the construction documents. Upon completion of the construction phase, the documents will be revised as needed to reflect "As-Built" conditions, and submitted in multiple to District for record.

Impact on Facility Operations and Performance

The Variable frequency Drives will enhance facility operations by reducing unnecessary energy usage.

"Page content is subject to Confidentiality Restrictions"

This page is intentionally left blank.

Appendix for ECM 10: Variable Frequency Drives

I. Energy Savings Calculations

"Page content is subject to Confidentiality Restrictions"

This page is intentionally left blank.

Project Template	
Energy and Demand Savings Summary	
Measure ID:	**14**
Measure Name:	**Variable Frequency Drives**
Measure Location:	
Engineers:	

Site Name:		**Colfax MS**	**Summary**
Item	Units	Savings	
Electricity			
Energy On-Peak	kWh	4,106	4,106
Energy Off-Peak	kWh	11,400	11,400
Energy Total	kWh	15,505	15,505
Demand On-Peak, Monthly	kW		0.0
Demand On-Peak, Annual	kW		0.0
Demand Off-Peak, Monthly	kW		0.0
Demand Off-Peak, Annual	kW		0.0
Fossil Fuel			
Natural Gas (NG)	Therms		0
Liquid Propane Gas (LPG)	Gallons		0
Steam	Mlbs		0
Fuel Oil, #2	Gallons		0
Fuel Oil, #4	Gallons		0
Fuel Oil, #6	Gallons		0
Miscellaneous	Misc		0
Water			
Water Savings	kGallons		0
Sewer			
Sewer Savings	kGallons		0

Project Template
Schuyler-Colfax-Middle School
Variable Frequency Drives

TMY-2 Weather Data for Newark, NJ								Proposed EMS Schedule and Loads								Existing Pump Usage		Proposed Pump Usage			Savings	
Amb. Temp Bin deg. F	Ave Temp deg. F	M.C.W.B deg. F	M.C. Enthalpy Btu/lbma	01-08 Hours	09-16 Hours	17-24 Hours	Total Bin Hours	Occ On-Peak Hrs.	UnOcc On-Peak Hrs.	Occ Off-Peak Hrs.	UnOcc Off-Peak Hrs.	Occ. Cool/ Heat Load (MBH)	UnOcc. Cool/ Heat Load (MBH)	Occ Cooling/Heating Energy Consump. (MMBTU)	UnOcc Cooling/Heating Energy Consump. (MMBTU)	Peak Cool/Heat Pump Usage (kWh)	Off-Peak Cool/Heat Pump Usage (kWh)	Proposed VFD Load Percentage (%)	Occ Cool/Heat Pump Usage (kWh)	UnOcc Cool/Heat Pump Usage (kWh)	HVAC Pump Savings (Peak kWh)	HVAC Pump Savings (Off-Peak kWh)
A	**B**	**C**	**D**	**E**	**F**	**G**	**H**	**I**	**J**	**K**	**L**	**M**	**N**	**O**	**P**	**Q**	**R**	**S**	**T**	**U**	**V**	**W**
Heating																						
55 to 60	57.5	50.3	20.4	217	191	192	600	190	52	0	357	(807)	0	0	0	2,529	0	90%	2,047	0	482	0
50 to 55	52.5	46.4	18.3	218	223	289	730	232	64	0	435	(1,106)	(141)	0	20	3,077	0	91%	2,558	0	519	0
45 to 50	47.5	41.8	16.0	243	196	195	634	201	55	0	377	(1,404)	(423)	78	178	2,746	501	92%	2,345	428	401	73
40 to 45	42.5	38.0	14.3	193	171	149	513	163	45	0	305	(1,703)	(706)	127	274	2,222	405	93%	1,948	355	274	50
35 to 40	37.5	33.9	12.5	357	311	355	1,023	325	89	0	609	(2,002)	(988)	382	806	4,430	808	94%	3,986	727	444	81
30 to 35	32.5	29.3	10.6	277	221	236	734	233	64	0	437	(2,301)	(1,270)	365	764	3,945	5,800	96%	2,918	419	1,027	5,381
25 to 30	27.5	24.3	8.7	159	98	134	391	124	34	0	233	(2,599)	(1,553)	243	506	2,101	3,090	97%	1,593	223	508	2,867
20 to 25	22.5	19.3	6.8	89	48	58	195	62	17	0	116	(2,898)	(1,835)	146	302	1,048	1,541	98%	815	111	233	1,430
15 to 20	17.5	14.8	5.3	74	20	31	125	40	11	0	74	(3,197)	(2,117)	109	225	672	988	99%	535	71	137	916
10 to 15	12.5	10.0	3.8	35	7	5	47	15	4	0	28	(3,496)	(2,399)	47	97	253	371	100%	206	27	47	345
5 to 10	7.5	5.1	2.3	17	9	8	34	11	3	0	20	(3,795)	(2,682)	38	78	183	269	100%	149	19	34	249
0 to 5	2.5	0.6	1.0	1	0	0	1	0	0	0	1	(4,093)	(2,964)	1	3	5	8	100%	4	1	1	7
-5 to 0	(2.5)	0.0	0.0	0	0	0	0	0	0	0	0	(4,392)	(3,246)	0	0	0	0	100%	0	0	0	0
-10 to -5	(7.5)	0.0	0.0	0	0	0	0	0	0	0	0	(4,691)	(3,529)	0	0	0	0	100%	0	0	0	0
-15 to -10	(12.5)	0.0	0.0	0	0	0	0	0	0	0	0	(4,990)	(3,811)	0	0	0	0	100%	0	0	0	0
-20 to -15	(17.5)	0.0	0.0	0	0	0	0	0	0	0	0	(5,289)	(4,093)	0	0	0	0	100%	0	0	0	0
-25 to -20	(22.5)	0.0	0.0	0	0	0	0	0	0	0	0	(5,587)	(4,375)	0	0	0	0	100%	0	0	0	0
				2,920	2,920	2,920	8,760	2,781	765	0	5,214			1,631	3,253	23,209	13,781		19,104	2,382	4,106	11,400

Cell Ref.	Comment
A-H	TMY-2 Weather Data for Newark, NJ
I - L	Proposed Operating hours
M	Proposed Occupied Cooling and Heating Loads from EMS
N	Proposed Unoccupied Cooling and Heating Loads from EMS
O	Proposed Occupied Cooling and Heating Usage from EMS
P	Proposed Unoccupied Cooling and Heating Usage from EMS
Q	= ([col I] + [col J] x P47) x P44
R	= ([col K] + [col L] x P47) x P44
S	Estimated VFD Loading based on 100% at design day load and 90% at minimum
T	= ([col I] + [col J] x) x P44 x [col S] ^2.2 / 0.98
U	= ([col K] + [col L] x) x P44 x [col S] ^2.2 / 0.98
V	= ([col Q] - [col T])
W	= ([col R] - [col U])

Assumptions:	Value	Unit	CELL		Description
			REF		
Occupied Area	116,894	SF	**P43**		
Pump Power	13.3	kW	**P44**		kW per pump,three 7.5 hp pumps
Pump Flow	549.0	GPM	**P45**		Pump flow with TDV
Minimum Allowable Pump Flow	494.1	GPM	**P46**		System load
UnOcc. Pump Cycling	10.0%		**P47**		% Operating Hours During UnOcc.

Appendix for ECM 10:
Variable Frequency Drives

II. Manufacturer Specification Sheets

"Page content is subject to Confidentiality Restrictions"

This page is intentionally left blank.

YASKAWA

V1000

1/8 to 25 HP

NEMA 1 Current Vector Microdrive

A World of Power in the Palm of your Hand!

The V1000 is a world-class compact current vector drive that defines a new world standard. Demands for efficient production and better maintainability are on the rise, spurred by global competition. Yaskawa drives have earned a reputation for high performance, high functionality, and high quality.

In our pursuit to create drives optimized for the market, Yaskawa has created the first compact current vector microdrive equipped with the standard features shown on the right.

200-240VAC Single Phase 50/60 Hz							
Model Number CIMR-VU ☐ FAA	BA0001	BA0002	BA0003	BA0006	BA0010	BA0012	BA0018
Motor Capacity (HP) ND	1/4	1/4	3/4	1	3	3	5
Motor Capacity (HP) HD	1/8	1/4	1/2	1	2	3	5
Output Current A (rms) ND	1.2	1.9	3.3	6.0	9.6	12.0	17.5
Output Current A (rms) HD	0.8	1.6	3.0	5.0	8.0	11.0	17.5

200-240V Three Phase 50/60 Hz											
Model Number CIMR-VU ☐ FAA	2A0001	2A0002	2A0004	2A0006	2A0010	2A0012	2A0020	2A0030	2A0040	2A0056	2A0069
Motor Capacity (HP) ND	1/4	1/4	3/4	1	3	3	5	10	10	20	25
Motor Capacity (HP) HD	1/8	1/4	1/2	1	2	3	5	7.5	10	15	20
Output Current A (rms) ND	1.2	1.9	3.5	6.0	9.6	12.0	19.6	30	40	56	69
Output Current A (rms) HD	0.8	1.6	3.0	5.0	8.0	11.0	17.5	25	33	47	60

380-480VAC Three Phase 50/60 Hz											
Model Number CIMR-VU ☐ FAA	4A0001	4A0002	4A0004	4A0005	4A0007	4A0009	4A0011	4A0018	4A0023	4A0031	4A0038
Motor Capacity (HP) ND	1/2	1	2	3	4	5	7.5	10	15	20	25
Motor Capacity (HP) HD	1/2	3/4	2	3	3	4	5	10	10	15	20
Output Current A (rms) ND	1.2	2.1	4.1	5.4	6.9	8.8	11.1	17.5	23	31	38
Output Current A (rms) HD	1.2	1.8	3.4	4.8	5.5	7.2	9.2	14.8	18	24	31

Available Options

- Screwless Terminals
- Integral EMC Filter (C1, C2, C3)
- 24 VDC Control Power Unit
- 120 VAC Interface
- Network Communications: Profibus-DP, DeviceNet, EtherNet/IP, Modbus TCP/IP, MECHATROLINK-II
- Operator Kits: NEMA 1 (LED or LCD) and NEMA 3R/4X (LED or LCD)
- USB Copy Unit
- DIN Rail Kit
- Input CE Filter
- Dynamic Braking Resistor (3% or 10%)
- Input Reactor (3% or 5%)

Features

- Up to 30% smaller than the competition
- Current vector control, open loop
- RoHS compliance
- On-line tuning
- Induction motor (IM) or permanent magnet motor (PM) operation
- Function Block Diagram (FBD) programming via DriveWorksEZ™
- Starting torque of 200% at 0.5 Hz
- Side-by-side installation due to patented hybrid heatsink
- Removable terminal block with parameter backup function*
- "One-touch" copy function with verify
- Super-fast 2 ms scan cycle with dual CPU
- EN954-1 Safety Cat. 3, Stop Cat. 0
- Increased vibration resistance, from 20 Hz to 50 Hz (0.65G)
- 1 in 10,000 failure rate
- Swing PWM function to decrease noise at low carrier frequencies
- Pre-maintenance function
- Modbus communication
- Cooling fan replacement without tools
- MTBF: 28 years
- Short Circuit Current Rating (SCCR): 30kA rms symmetrical
- Common programming with all other Yaskawa drives
- DriveWizard software available at no extra cost

YASKAWA

V1000

1/8 to 25 HP

Specifications

Item	Specification
Overload Capacity	150% Overload for 60 sec. (Heavy Duty)
	120% Overload for 60 sec. (Normal Duty)
Output Frequency	0~400 Hz (higher frequencies available with custom software)
Control Methods	Open Loop Current Vector Control, V/f Control, PM Open Loop Vector Control
	Simple closed loop speed control available
Protective Design	IP20/NEMA1
Braking Transistor	Standard in all models
Braking Torque	20 - 40% increase with intelligent high-slip braking function
KEB Function	Uses mechanical energy to continue operation during momentary power failure, standard
Overvoltage Function	Prevention function for die-cushion in a hydraulic mechanical press and other applications
Maintenance	Elapsed timer assists in preventative maintenance for cooling fan, capacitors, and transistors
	Easily replaceable cooling fan
Global Certification	CE, UL, cUL, RoHS, TUV
Available I/O	(7) multi-function digital inputs
	(1) hardwire baseblock
	(2) multi-function analog inputs
	(1) multi-function pulse input
	(1) multi-function relay output
	(2) multi-function photo-coupler outputs
	(1) multi-function 0-10 Vdc analog output
	(1) multi-function pulse output
Network Communication	Standard: RS-422/485 MODBUS 115 kbps
	Optional: DeviceNet, EtherNet/IP, Profibus-DP, Modbus TCP/IP, MECHATROLINK-II
Keypad Operator	Standard LED 5 digit display
	Optional multi-lingual, full-text remote LCD

Major Applications

Size Comparison

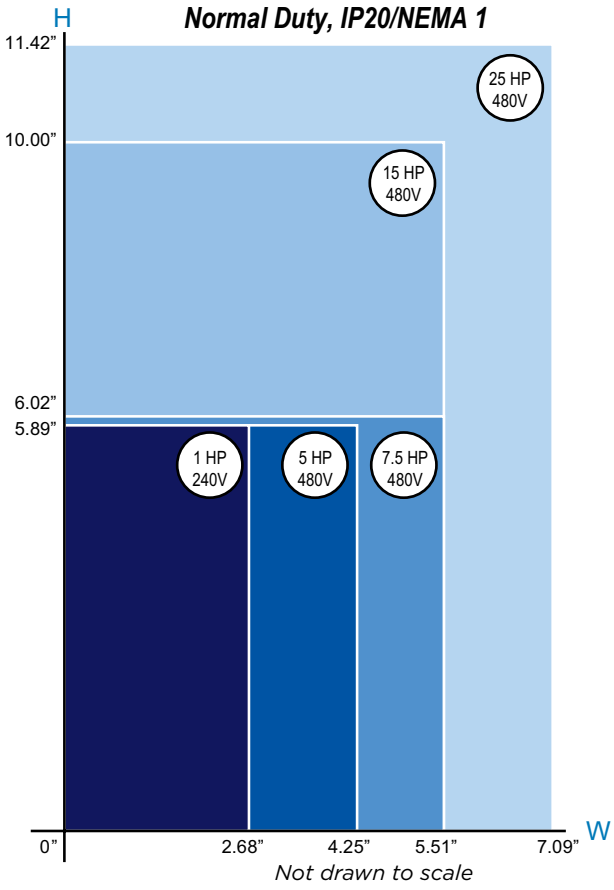

Document Number: FL.V1000.01 • 06-15-2010 • © 2010

ECM 15: Computer Load Management

ECM Overview

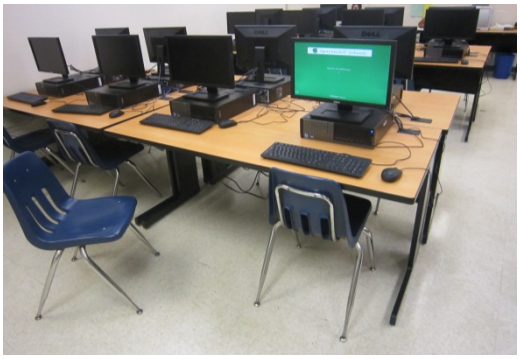

Figure 15.1: Typical computer lab at a school

Ameresco proposes to install a software tool that will allow measurement, management, and reduction of the power used by the Wayne Township School District's (District) personal computers. This software will save energy consumed by computers during unoccupied periods. The software is fully configurable by Information Technology (IT) personnel and provides a means to schedule software updates as well as reduce energy and power consumption. The software detects user presence by tracking inputs such as mouse movement or use of the keyboard. During unoccupied periods the software changes the power use profiles to reduce power consumption after a period of time specified by IT

ECM Detail

Existing System

Computers are found in all schools and buildings throughout the District. The District currently has scheduling software that is supposed to turn computer off each night around 8 pm. The Software is "Deep Freeze" by Faronics. Deep Freeze software function is not to control and monitor energy but to bring the computers each day back to a known configuration to ensure user changes are clear and reset to default value. Deep Freeze can perform very basic power saving strategies as well like shutting down PC at a predetermined time. However the current system is not optimized and the Deep Freeze software does not have the functionality to implement aggressive energy savings strategies. During the site visits, many computers were found fully on even though the user was not present. An estimated three thousand four hundred (3,400) personal computers (PCs) are currently in the District's schools and buildings as represented by the District. Nearly all of these computers run on a Microsoft operating system.

Proposed System

Ameresco proposes to install a software utility that will allow measurement, management, and reduction of power usage of the District's personal computers. This software will save energy consumed by computers during unoccupied periods. The software is fully configurable by Information Technology (IT) personnel and provides a means to schedule software updates as well as to reduce energy and power consumption. The software detects user presence by tracking inputs such as mouse movement or use of the keyboard. During unoccupied periods the software resets parameters to reduce lower power consumption after a period of time

specified by the IT department. Ameresco has included licenses for up to 707 computers as part of this measure – additional licenses can be purchased separately.

Ameresco proposes to install Faronics' Powersave or equivalent software for this purpose. This software will save energy when the computer is not in use without affecting performance while the computer is in use. Computer energy management is a financial and environmental priority for organizations today. Unfortunately, most IT personnel find the basic power saving options that are included with their workstation operating system to be disruptive to user and IT productivity.

Faronics' Powersave changes all this by providing system administrators with minimally disruptive computer power management. By delivering enterprise level control over computer power configurations, workstations can now be configured to shutdown, standby and hibernate based upon CPU, disk, and application activity. The application activity feature is particularly useful if you would like a system to remain powered on whenever a certain application is running. Powersave even has the ability to generate detailed reports outlining enterprise-wide energy consumption levels and associated cost savings.

Using Faronics' Core Console, system administrators have the ability to assign their workstations into groups, employ flexible scheduling and configuration options, and generate savings reports that prove Power Save's return-on-investment.

Intelligent Configuration Settings

- Definitions can be based on CPU, disk, keyboard, mouse and application activity
- Shutdown without the loss of user productivity

Flexible Scheduling

- Options to turn off the monitor, and standby, hibernate or shutdown the computer
- Schedule Wake-on-LAN, shutdown, or restart events
- Promotes user needs in

Power Save Report: 10/3/2007 to 1/15/2008

Report summary:	
Start Time:	Wed, Oct 03, 2007 12:00 AM
End Time:	Tue, Jan 15, 2008 7:32 AM
Report created:	Tue, Jan 15, 2008 7:32 AM
Number of workstations:	1406
Average savings:	$4.32
Total power savings:	**$6,077.66**

Power estimates used for this report:	
Monitor On:	53
Monitor Standby:	2
Computer On:	77
Computer Standby:	1
Electricity cost:	$0.12 / kWh

	Name	Monitor Standby days	Monitor Standby hours	PC Standby days	PC Standby hours	PC Off days	PC Off hours	Savings
1	7301A	0	7.06	0	0.00	0	7.06	$0.11
2	7303A	0	0.00	0	0.00	0	0.00	$0.00
3	7304A	0	0.00	0	0.00	0	0.00	$0.00
4	7305A	0	15.45	0	0.00	0	15.45	$0.24
5	7306A	23	17.90	0	0.00	23	17.90	$8.75
6	7307A	27	19.38	0	0.00	27	19.38	$10.25
7	7308A	7	21.39	0	0.00	7	21.39	$2.91
8	7309A	0	0.67	0	0.00	0	0.67	$0.01
9	7311A	0	11.36	0	0.00	0	11.36	$0.17
10	7312A	15	3.82	0	0.00	15	3.82	$5.59
11	7313A	74	14.40	0	0.00	74	14.40	$27.50
12	7314A	1	2.15	0	0.00	1	2.15	$0.40
13	7317A	0	22.54	0	0.00	0	22.54	$0.35
14	7318T	0	0.00	0	0.00	0	0.00	$0.00
15	7320T	45	14.79	0	0.00	45	14.79	$16.89
16	whs-p5-01	21	18.49	0	0.00	21	18.49	$3.03
17	whs-p5-02	2	16.28	0	0.00	2	16.28	$0.99
18	whs-p5-03	22	23.29	0	0.00	22	23.29	$8.47
19	whs-p5-04	10	14.47	0	0.00	10	14.47	$3.91
20	whs-p6-01	40	17.14	0	0.00	40	17.14	$15.01
21	whs-p7-01-06	20	5.36	0	0.00	20	5.36	$7.46
22	whs-pool	0	0.56	0	0.00	0	0.56	$0.01
23	whs-pos	0	17.25	0	0.00	0	17.25	$0.27
24	whs-sci-01-05	0	0.00	0	0.00	0	0.00	$0.00
25	whs-sci-03	0	0.00	0	0.00	0	0.00	$0.00
26	whs-sci-hall	66	19.56	0	0.00	66	19.56	$24.63
27	whs-theater	2	4.50	0	0.00	2	4.50	$0.81
28	whs-wood-01	0	0.00	0	0.00	0	0.00	$0.00
							Total savings:	**$6,077.66**

The values presented in this report are estimates. Time in power saving modes is based on the workstation actions that reported to the console. Savings amounts are calculated based on the user-selected estimates for power usage and electricity cost.

Figure 15.2 A Power Save Report from Faronics Power Saver™ software. This report shows various statistics such as how much money and energy is being saved by implementing this ECM.

tandem with energy conservation

Compatibility Options

- Customize the deployment as well as update and control the client workstations
- Localized in five languages: English, French, German, Spanish and Japanese

Customized Inactivity Definitions

- Employ energy saving actions when CPU or disk activity falls below a defined level
- Prevent the workstation from employing power saving actions when a particular application is running

Enterprise Control

- Faronics Core Console provides unified workstation management capabilities
- Workstation grouping makes managing large deployments easy

Detailed workstation usage reporting allows you to see how much power you are saving based upon your regional electricity cost

Equipment, Design and Construction Documentation

Equipment will be identified in submittals provided to District for approval prior to procurement. Documents will be submitted to the engineering maintenance department, for their review and comment. Upon approval, these will constitute the construction documents. Upon completion of the construction phase, the documents will be revised as needed to reflect "As-Built" conditions, and submitted in multiple to District for record.

Impact on Facility Operations and Performance

The computer load management software will enhance facility operations by reducing electricity usage during unused periods.

This page is intentionally left blank.

Appendix for ECM 15: Computer Load Management

I. Energy Savings Calculations

This page is intentionally left blank.

Project Template	
Energy and Demand Savings Summary	
Measure ID:	**15**
Measure Name:	**Computer Load Management**
Measure Location:	
Engineers:	

Site Name:		**Carter ES**	**Dey ES**	**Fallon ES**	**Kennedy ES**	**Lafayette ES**	**Packanack ES**	**Pines Lake ES**	**Ryerson ES**	**Terhune ES**	**Anthony Wayne MS**	**Colfax MS**	**Washington MS**	**Wayne Hills HS**	**Wayne Valley HS**	**Preakness**	**Admin**	**Summary**
Item	Units	Savings	Savings	Savings	Savings	Savings	Savings	Savings	Savings	Savings	Savings	Savings	Savings	Savings	Savings	Savings	Savings	
Electricity																		
Energy On-Peak	kWh	5,117	5,761	5,961	7,395	5,525	6,092	5,872	5,860	5,986	16,365	8,672	8,247	30,815	23,207	1,098	2,799	144,772
Energy Off-Peak	kWh																	
Energy Total	kWh	5,117	5,761	5,961	7,395	5,525	6,092	5,872	5,860	5,986	16,365	8,672	8,247	30,815	23,207	1,098	2,799	144,772
Demand On-Peak, Monthly	kW																	
Demand On-Peak, Annual	kW																	
Demand Off-Peak, Monthly	kW																	
Demand Off-Peak, Annual	kW																	
Fossil Fuel																		
Natural Gas (NG)	Therms	-85	-92	-83	-121	-87	-102	-93	-97	-99	-222	-143	-129	-499	-377	-18	-42	-2,288
Liquid Propane Gas (LPG)	Gallons	0	0	0	0	0	0	0	0	0	0	0	0	0	0	0	0	0
Steam	Mlbs	0	0	0	0	0	0	0	0	0	0	0	0	0	0	0	0	0
Fuel Oil, #2	Gallons	0	0	0	0	0	0	0	0	0	0	0	0	0	0	0	0	0
Fuel Oil, #4	Gallons	0	0	0	0	0	0	0	0	0	0	0	0	0	0	0	0	0
Fuel Oil, #6	Gallons	0	0	0	0	0	0	0	0	0	0	0	0	0	0	0	0	0
Miscellaneous	Misc	0	0	0	0	0	0	0	0	0	0	0	0	0	0	0	0	0

Project Template

Computer Load Management

						Existing					Proposed					Savings
Total Qty of PCs	Building	PC type1	PC type2	CRT Monitor	LCD monitor	Existing Operating Hours	Overnight Standby Factor	Overnight Shutdown Factor	Overnight Operating Factor	Existing Power Consumption (kWh)	Proposed Operating Hours	Overnight Standby Factor	Overnight Shutdown Factor	Overnight Operating Factor	Proposed Power Consumption (kWh)	Savings (kWh)
[A]	[B]	[C]	[D]	[E]	[F]	[G]	[H]	[I]	[J]	[K]	[L]	[M]	[N]	[O]	[P]	[Q]
126	Randall Carter-Elementary School	126	0		126	1,760	9%	85%	6%	17,090	1,584	5%	95%	0%	12,051	5,040
141	Theunis Dey-Elementary School	141	0		141	1,760	9%	85%	6%	19,034	1,584	5%	95%	0%	13,421	5,613
138	James Fallon-Elementary School	138	0		138	1,760	9%	85%	6%	18,627	1,584	5%	95%	0%	13,134	5,493
180	John F. Kennedy-Elementary School	180	0		180	1,760	9%	85%	6%	24,295	1,584	5%	95%	0%	17,131	7,164
129	Lafayette-Elementary School	129	0		129	1,955	9%	85%	6%	18,769	1,760	5%	95%	0%	13,608	5,161
152	Packanack-Elementary School	152	0		152	1,760	9%	85%	6%	20,563	1,584	5%	95%	0%	14,499	6,063
138	Pines Lake-Elementary School	138	0		138	1,760	9%	85%	6%	18,640	1,584	5%	95%	0%	13,144	5,497
143	Ryerson-Elementary School	143	0		143	2,053	9%	85%	6%	21,584	1,848	5%	95%	0%	15,842	5,742
148	Albert Payson Terhune-Elementary School	148	0		148	1,760	9%	85%	6%	19,981	1,584	5%	95%	0%	14,089	5,892
353	Anthony Wayne-Middle School	353	0		353	3,546	9%	85%	6%	81,899	3,191	5%	95%	0%	67,126	14,773
208	Schuyler-Colfax-Middle School	208	0		208	2,781	9%	85%	6%	39,560	2,503	5%	95%	0%	31,046	8,514
193	George Washington-Middle School	193	0		193	3,546	9%	85%	6%	44,763	3,191	5%	95%	0%	36,689	8,074
713	Wayne Hills-High School	670	43		713	3,546	9%	85%	6%	164,143	3,191	5%	95%	0%	134,541	29,602
553	Wayne Valley-High School	521	32		553	3,546	9%	85%	6%	127,328	3,191	5%	95%	0%	104,365	22,963
27	Preakness (Library Community Center)	27	0		27	1,929	9%	85%	6%	3,849	1,736	5%	95%	0%	2,781	1,068
60	Board of Ed Administration	60	0		60	3,546	9%	85%	6%	13,931	3,191	5%	95%	0%	11,418	2,513
3400		3,325	75	0	3,400					654,055					514,885	139,170

Item	Value	Units	cell ref	Remarks
Watts used by PC type1	195	W	[C62]	Tower PC, such as IBM ThinkCentre
Watts used by PC type2	165	W	[C63]	Mac
Watts used by CRT Monitor	70	W	[C64]	
Watts used by LCD Monitor	35	W	[C65]	
Watts Used during sleep mode	5	W	[C66]	
Computer Load Factor	30.0%	%	[C67]	Estimated computer power loading
Software usage percentage	10.0%	%	[C68]	Assumes new software puts PCs to sleep for 10% of occupied hours
Occupied period usage factor	85.0%	%	[C69]	Assumes 15% of computers are off during existing conditions
Hours in a year	8,760	hr	[C70]	

Cell Ref.	Comment
A	Estimated quantity of machines appropriate for retrofit, per IT Personnel
B	Location of Computers
C	Estimated quantity of 195W machines appropriate for retrofit, per IT Personnel
D	Estimated quantity of 165W machines appropriate for retrofit, per IT Personnel
E	Estimated quantity of CRT monitors appropriate for retrofit, per IT Personnel
F	Estimated quantity of LCD monitors appropriate for retrofit, per IT Personnel
G	Annual occupied hours of operation
H	Percentage of computers currently put into standby mode overnight
I	Percentage of computers currently shutdown overnight
J	Percentage of computers currently left on overnight
K	= ((PC Power) x [C67] x [col G] ÷ 1,000) x [C69] + (([col C] + [col D]) x [C66] x ([C70] - [col G]) ÷ 1,000) x [col H] + ((PC Power) x [C67] x ([C70] - [col G]) ÷ 1,000) x (1 - [col H] - [col I])
L	= [col G] x (1 - [C68])
M	Percentage of computers proposed to be in standby mode overnight
N	Percentage of computers proposed to be shutdown overnight
O	Percentage of computers proposed to be left on overnight
P	= ((PC Power) x [C67] x [col L] ÷ 1,000) x [C69] + ([col C] + [col D]) x [C66] x ([col G] - [col L]) ÷ 1,000 x [C69] + (([col C] + [col D]) x [C66] x ([C70] - [col L]) ÷ 1,000) x [col M] + ((PC Power) x [C67] x ([C70] - [col L]) ÷ 1,000) x (1 - [col M] - [col N])
Q	= [col K] - [col P]

Project Template
Computer Load Management
Interactive Savings Calculation

	Savings		Heating Penalty				Cooling Benefit			
A	B	C	D	E	F	G	H	I	J	K
Facility	Annual kW	Annual kWh	Heat Gain to Space	Heating Months	Heating System Efficiency	Heating Penalty MMBtu	Total Space Cooled	Cooling Months	Cooling System COP	Cooling Benefit MMBtu
Randall Carter-Elementary School		5,040	90.0%	5.0	76.0%	(8.5)	12.0%	4.0	2.34	0.3
Theunis Dey-Elementary School		5,613	90.0%	5.0	78.0%	(9.2)	31.0%	4.0	3.52	0.5
James Fallon-Elementary School		5,493	90.0%	5.0	85.0%	(8.3)	75.0%	4.0	2.64	1.6
John F. Kennedy-Elementary School		7,164	90.0%	5.0	76.0%	(12.1)	33.0%	4.0	3.08	0.8
Lafayette-Elementary School		5,161	90.0%	5.0	76.0%	(8.7)	62.0%	4.0	2.64	1.2
Packanack-Elementary School		6,063	90.0%	5.0	76.0%	(10.2)	5.0%	4.0	3.22	0.1
Pines Lake-Elementary School		5,497	90.0%	5.0	76.0%	(9.3)	60.0%	4.0	2.64	1.3
Ryerson-Elementary School		5,742	90.0%	5.0	76.0%	(9.7)	24.0%	4.0	3.52	0.4
Albert Payson Terhune-Elementary School		5,892	90.0%	5.0	76.0%	(9.9)	18.0%	4.0	3.37	0.3
Anthony Wayne-Middle School		14,773	90.0%	5.0	85.3%	(22.2)	100.0%	4.0	2.78	5.4
Schuyler-Colfax-Middle School		8,514	90.0%	5.0	76.0%	(14.3)	20.0%	4.0	3.22	0.5
George Washington-Middle School		8,074	90.0%	5.0	80.0%	(12.9)	23.0%	4.0	3.22	0.6
Wayne Hills-High School		29,602	90.0%	5.0	76.0%	(49.9)	50.0%	4.0	3.66	4.1
Wayne Valley-High School		22,963	90.0%	5.0	78.0%	(37.7)	13.0%	4.0	3.66	0.8
Preakness (Library Community Center)		1,068	90.0%	5.0	76.0%	(1.8)	25.0%	4.0	2.64	0.1
Board of Ed Administration		2,513	90.0%	5.0	76.0%	(4.2)	100.0%	4.0	2.64	1.0
Lafayette-Elementary School Modulars		0	100.0%	5.0	98.0%	0.0	100.0%	4.0	2.93	0.0
Pines Lake-Elementary School		0	100.0%	5.0	98.0%	0.0	100.0%	4.0	2.93	0.0
Ryerson-Elementary School Modulars		0	100.0%	5.0	98.0%	0.0	100.0%	4.0	3.22	0.0
Totals	**0.0**	**139,170**				**(228.8)**				**19.1**

Notes:	
A	Applicable building included in comprehensive energy audit
B	Measure demand savings {kW} associated with Measure retrofit measures
C	Measure energy savings {kWh} associated with Measure retrofit measures
D	Estimated percentage of Measure energy transmitted to conditioned space
E	Estimated length of heating season
F	Estimated heating system efficiency, interacted with other measures
G	Resulting heating penalty due to Measure upgrades = [col C] x [col D] x 3,413 x ([col E] / 12) / [col F] / 1,000,000
H	Estimated percentage of space cooled
I	Estimated Length of cooling season
J	Estimated cooling system efficiency, interacted with other measures
K	Resulting cooling benefit due to Measure upgrades = [col C] x [col D] x 3,413 x ([col I] / 12) / [col J] / 1,000,000

Appendix for ECM 15: Computer Load Management

II. Manufacturer Specification Sheets

This page is intentionally left blank.

Product **Data Sheet**

FARONICS
POWERSAVE™

Automated Energy Conservation

Faronics Power Save delivers computer energy management that doesn't interfere with user or IT needs. Power Save keeps workstations running when users need them, and accurately determines when computers are inactive so they can be powered down. Power Save also proves its rapid return-on-investment through network-wide power consumption and savings reports.

Power Save is the only computer energy management solution that analyzes CPU, disk, keyboard, mouse, and application activity before taking power management actions—making it the ultimate green software solution for desktop and laptop computers.

Power Save Benefits

- Computer energy management that is non-disruptive to IT and end-users
- Provides tangible financial savings to organizations by reducing computer power consumption
- Proves rapid return-on-investment through enterprise-wide tracking and reporting
- Strengthens IT control over network systems while promoting user productivity at all times
- Fosters feasible environmental responsibility that is easy to deploy and manage

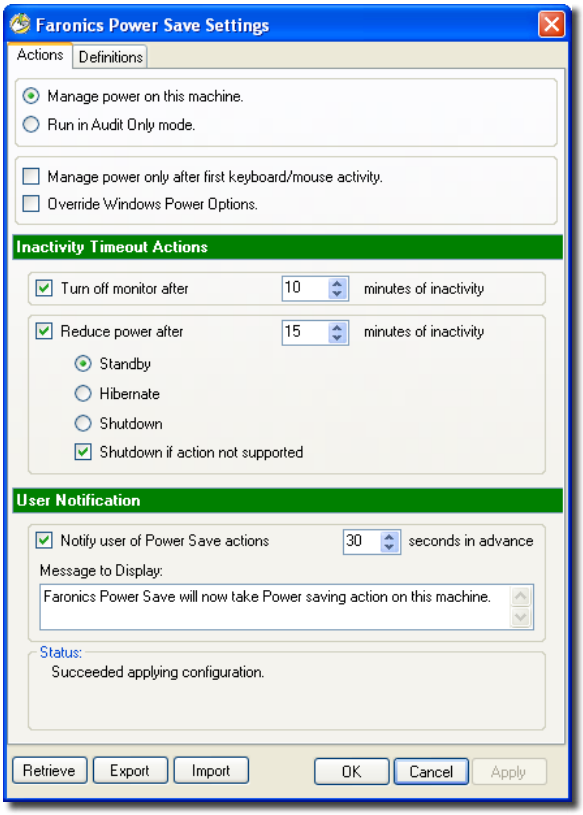

Let Power Save handle computer and monitor inactivity timeouts, with the option of notifying users before taking action.

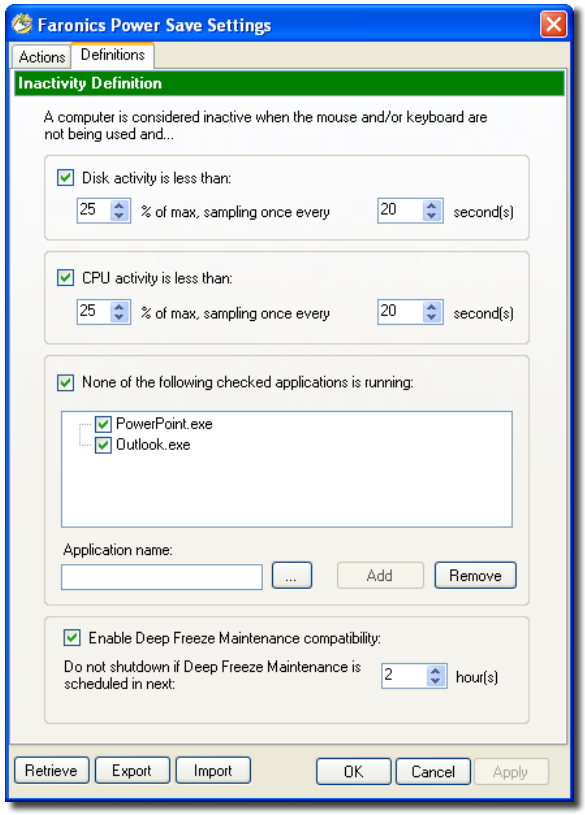

Specify your computer activity threshold levels, and add the applications that take priority over energy management.

Key Features

Intelligent Configuration Settings

- Definitions can be based on CPU, disk, keyboard, mouse and application activity
- Shutdown without the loss of user productivity

Flexible Scheduling

- Options to turn off the monitor, and standby, hibernate or shutdown the computer
- Schedule Wake-on-LAN, shutdown, or restart events
- Schedule Power Save configuration updates for a single, daily, weekly, or monthly occurrence
- Schedule a temporary window where Power Save will not enforce energy management policies

Compatibility Options

- Customize the deployment as well as update and control the client workstations
- Recognizes and accommodates to Deep Freeze maintenance schedules
- Localized in English, French, German, Spanish and Japanese

Customized Inactivity Definitions

- Employ energy saving actions when CPU or disk activity falls below a defined level
- Prevent the workstation from employing power saving actions when a particular application is running

Enterprise Control

- Faronics Core Console provides unified workstation management capabilities
- Workstation grouping makes managing large deployments easy
- Disable and override a workstation's operating system energy management settings

climate savers smart computing™

ENERGY STAR PARTNER

Savings Reports

- Generate enterprise power consumption and savings reports through Faronics Core Console
- Detailed workstation utilization reporting allows you to see how much power you are saving based upon your regional electricity cost
- Audit mode tracks the workstation energy savings that could have been gained had Power Save been installed and active

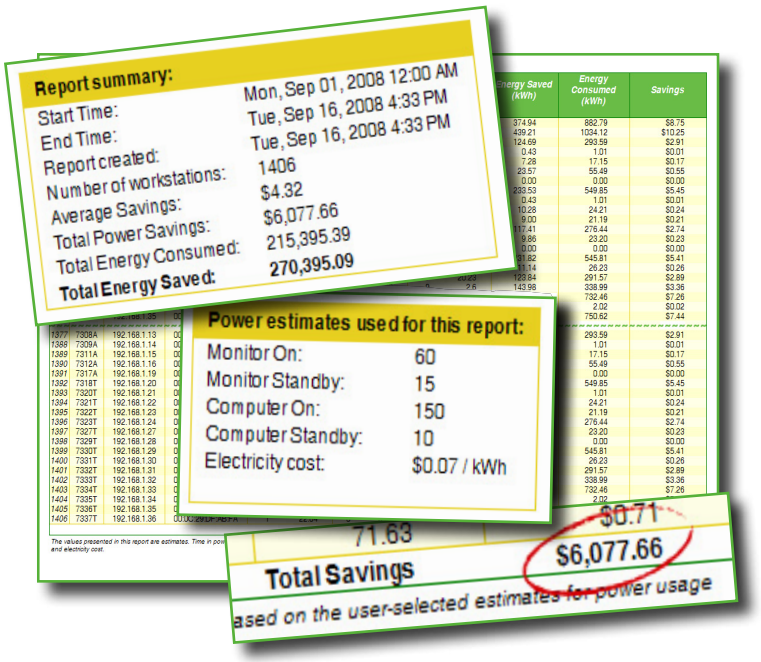

"We've deployed Power Save enterprise-wide on all our workstations, which is saving us over $50,000 per year in energy costs. That's $50,000 that we now have to buy new IT equipment and software, hire more personnel, or invest into employee training."

– Sung Lee, Director of Computer Support, Howard Community College

System Requirements

The Power Save client computer requires Windows 2000 SP4, Windows XP SP2, or Windows Vista. Faronics Core Console system requirements can be found in the Faronics Core Console user guide. It is highly recommended that all components be installed using a Windows Administrator account.

Versions available for:

Faronics™
Intelligent Solutions for ABSOLUTE Control

USA
2411 Old Crow Canyon Road
Suite 170
San Ramon, CA 94583

Toll Free Tel
800-943-6422

Toll Free Fax
800-943-6488

Canada/International
620-609 Granville Street
P.O. Box 10362
Vancouver, BC, V7Y 1G5

International Tel
+1-604-637-3333

International Fax
+1-604-637-8188

sales@faronics.com

Download a free, fully functional evaluation copy at **www.faronics.com**

For more information on joining our **Partner Program** visit **www.faronics.com/partners**

© 1999 - 2008 Faronics Corporation. All rights reserved. Faronics, Deep Freeze, Deep Freeze Mac, Faronics Anti-Executable, Faronics Device Filter Mac, Faronics Power Save, Faronics Power Save Mac, Faronics Insight, Faronics System Profiler and WINSelect are trademarks and/or registered trademarks of Faronics Corporation. All other company and product names are trademarks of their respective owners.

Section D:
Financial Results

Project Specifics

Ameresco completed the investment grade energy audit and provided Wayne Township School District with an interactive measure cost and savings spreadsheet to assist in selecting a final project scope of work. Based on the District's requested selection and Ameresco's refinement of the cost and savings figures for each of the selected opportunities, Ameresco has recommended the ECMs described in Section C of this Technical Energy Audit. The table below is a financial summary that includes the measures selected and described in Section C.

Table 1

	IGA
Financing Term (post construction)	15 years
Estimated Tax-exempt Interest Rate	3.00%
Capital Cost	$10,235,462
Customer contributions	$0
Net Excess Cumulative Cash Flow Per Year	$650

We have included an estimated project proforma analysis immediately following this section, based on a 15-year contract term (Note: this is 15 years post-construction of all Energy Conservation Measures comprising the District's ESIP Energy Savings Plan). This proforma incorporates Ameresco's energy costs savings, projected funding from the utility rebates under the NJ BPU OCE Pay for Performance program ("P4P"), annual lease payments and results in positive cash flows to the District over the life of the proposed project.

Maintenance savings are included for the lighting measure. Lighting material savings are calculated based on the reduction of material and reduced O&M expense due to the upgrade. Please refer to the following pro-forma analysis for further information regarding the financial aspects of this project.

Final pricing for all project ECMs is subject to NJ public procurement policies of the District, and will be determined through the procurement process mandated by State legislation. In the event direct costs as quoted by contractors are less than budgeted for the project, Ameresco and the District will agree upon additional work or services to be provided under this contract.

"Page content is subject to Confidentiality Restrictions"

Contract Cost

Per NJ ESIP legislation, an Open Book Pricing method is required, whereby the District can review in detail the cost for the specified scope, including actual contractor and material quotes ("Direct Pricing"). The Ameresco Contract Cost is comprised of the sum of the Direct Pricing plus the Indirect Pricing (Ameresco Services, overhead and profit). The following total budget per ECM has been developed as a result of this Investment Grade Audit:

Ecm #	ECM Name	Total Project Costs
1	Lighting System Improvements	$ 3,027,412
2	Lighting Controls	$ 558,428
3	Exterior Lighting	$ 380,859
4	Integrated and New Energy Management System	$ 2,752,323
5	Steam Trap Replacements	$ 102,200
6	Pipe &Tank Insulations	$ 23,959
7	Building Envelope Improvements	$ 273,328
8	Vending Machine Controls	$ 10,804
9	Premium Efficiency Motors	$ 48,972
10	Walk-in Freezer/Cooler Controllers	$ 12,638
11	High Efficiency Transformers	$ 222,936
12	Replace Boilers	$ 2,628,121
13	Destratification Fans	$ 87,750
14	Variable Frequency Drives	$ 35,849
15	Computer Load Management	$ 69,882
		$ 10,235,462

Direct Pricing

Prior to the implementation of the work, Ameresco will solicit pricing through public bid from subcontractors and/or equipment providers for each ECM, and to the extent possible, shall use the most competitive and qualified subcontractor or equipment provider to implement the work relating to such ECM. The determination of subcontractor selection shall comply with all NJ public procurement requirements described earlier. Any cost not specifically included in the Indirect Pricing shall be part of the Direct Pricing.

Indirect Pricing

- Design and Engineering: Preparation of all ECM bid specifications and ECM design.
- Construction Management: Ameresco staff providing management of the project and subcontractors throughout the construction term.

- Legal Review, Contract Administration and Procurement: Administration of the contracts, including maintaining compliance with Ameresco's contract with the Wayne Township School District as well as Ameresco's contracts with each of our ultimate subcontractors.
- Bonding: Ameresco's performance and payment bonds on the gross value of the construction costs. Subcontract bonding is required and will be included as part of the direct costs.
- Training: Ameresco's training of District personnel at the time of commissioning, prior to turn over of the project to Wayne Township SD personnel.
- Overhead and Profit: Ameresco's recovery of corporate overhead and recognition of profit

Ameresco's fee structure is based upon the defined scope-of-work, and the staffing plan and services required to successfully develop and implement the desired project to the agreed upon schedule.

Any cost not specifically included in the Indirect Pricing shall be included in the Direct Pricing, inclusive of all materials, labor, and other services or fees required to successfully implement the Scope of Services.

In the event the Contract Cost is anticipated to exceed the "not to exceed" total stated above, the District and Ameresco will modify the Scope of Services in order to remain within the stated maximum.

Savings Coverage

It is important to note that revisions to the project scope during the design phase may have an effect on the savings levels and overall project economics. The District and Ameresco need to remain cognizant of the ability to meet the guaranteed savings levels specified in the Contract and aware that changes in project scope may necessitate a modification to Ameresco's guarantee. In the event the proposed design adversely affects the ability to meet these obligations, Ameresco and the District will need to mutually agree upon revisions to the project scope or contract. Ameresco shall provide reasonable efforts to rerun project economics based upon actual costs and savings levels during the design phase, including for the addition of other opportunities, to show the effect of scope/pricing changes on the overall economics.

Rebates / Incentives

Ameresco has estimated rebates available for this project into the economics of the project. These estimates are based on our expectations for incentives available through the NJ BPU Pay-for-Performance Program ("P4P"), but we are unable to guarantee the exact final level of rebates the District will recognize as a result of implementing this project. Any additional rebates will be for the benefit of the District, and the District shall be responsible for addressing any financial shortfalls as a result of fewer than expected rebates. Ameresco's pricing is based on payment of the gross project cost, not the cost net of rebates, based upon a percentage of completion.

Table 2 summarizes the rebates currently estimated for this project:

Table 2: Rebate Summary

Total Estimated Incentive	$ 1,130,485
Paid During Construction	$0
Paid at Completion	$663,996
Paid 1 Year After Completion	$466,489

Demand Response

Wayne Township School District is currently partnered with Constellation Energy Inc. as the District's Curtailment Service Provider. The District wishes to continue to with the current obligation and contract. Upon completion of the current obligation and contract the District will decide if it wishes to enroll and participate in further Demand response programs. Currently there are only 4 schools that meet the minimum 100 kw curtailment capability/meter to enroll in the PJM programs.

School	Demand Response Curtailment Commitment (kW)
Anthony Wayne Middle School	225
Schuyler-Colfax Middles School	125
Wayne Hills High School	257
Wayne valley High School	217
Total	824

Proposed Financing Structure

Frequency of Payments. We have structured our proposal based on a 15 year financing term (post-construction), using monthly payments due after project completion with an assumed 18 months construction period.

Term of the Proposed Agreement. Ameresco proposes a contract term of 15 years after the Final Installation Date of the Equipment (Note: the maximum allowed under New Jersey State Law is 15 years).

Interest Rate and Financing Term

Ameresco estimated the interest rates for project financing based on discussions with the District. The ultimate rate may vary based on the District's RFP for financing, but Ameresco does not guarantee it will be less than or equal to the assumed 3.00% interest rate used in the pro forma cash flow. The financing term is based on 15-years of repayment, which commences after an assumed 15 months of construction. (Additional information on the assumed construction schedule is included in Section E of this audit.)

Construction Financing

Ameresco assumes the financing proceeds will be funded into an escrow or similar account at the inception of the project. Monthly drawings are made against the escrow as the project is implemented, based upon a percentage of work completed for the preceding period.

Procurement and Project Approvals

Ameresco will contract with all related subcontractors through an open and competitive process as required by the District's procurement policies, and supervise the installation and completion of all ESIP Energy Savings Plan (ESP) projects/Energy Conservation Measures (ECMs). Working with, and under the authority of the District, Ameresco will prepare and release bid specification for all subcontractor scopes of work associated with project installations. All contractors selected for the project will be listed or qualified contractors with the NJ Department of the Treasury, Division of Property Management and Construction (DPMC). All routine public works construction contracting procedures and requirements of the District will be followed. This includes satisfying all requirements regarding public bidding, bid security, performance guarantees, insurance, and other requirements that are applicable to NJ public works contracts. Prior to initiating public bidding requirements and project implementation, Ameresco will submit permit applications to, and gain approval from, all appropriate NJ authorities for all applicable projects.

Guarantee / Ongoing Monitoring

At the request of the District, Ameresco has included an ongoing monitoring and verification plan as part of the overall project for the first three years of the project term only. The verification pricing is based upon on a short-term plan with certain instantaneous measurements performed at commissioning to ensure audit saving projects are met, and on-going monitoring over the project term to assist the District in operating at peak efficiency throughout the project term. This approach allows Ameresco to be a long-term partner of the District while minimizing on the on-going cost of verification and therefore allowing significantly more capital improvements to be funded.

"Page content is subject to Confidentiality Restrictions"

Year	M&V
1	$ 18,437
2	$ 18,991
3	$ 19,560
4	
5	
6	
7	
8	
9	
10	
11	
12	
13	
14	
15	
	$ 56,988

Other Funded Costs

At the request of the District, Ameresco has included other project related costs in the overall project economics. These costs are District costs associated with the project and are not part of the Ameresco services to be managed:

District Design and Engineering	**$716,482**

This page is intentionally left blank.

FORM VI

ESCO'S PRELIMINARY ENERGY SAVINGS PLAN (ESP):
ESCO's Preliminary Annual Cash Flow Analysis Form
WAYNE TOWNSHIP PUBLIC SCHOOLS
Energy Savings improvement Program

ESCO Name: **Ameresco Inc**

Note: Respondents must use the following assumptions in all financial calculations

(a) The cost of all types of energy should be assumed to inflate at 2.4% gas, 2.2% electric per year, and

1. Terms of Agreement: 15 years (180 Months) post construction
2. Construction Period (2) (months): 12
3. Cash Flow Analysis Format
Proposed Interest Rate: 5.00%
Projected Cost (before incentives): $ 10,235,462

Electric escalation	2.20%
Gas Escalation	2.40%
Other Items	3.00%

Year	Annual Energy Savings	Annual Operational Savings	Energy Rebates/Incentives	Total Annual Savings	Annual Project Costs	Board Costs	Annual Service Costs (3)	Net Cash Flow to Client	Cumulative Cash Flow
Installation									$ -
1	$ 704,905	$ 27,489	$ 663,996	$ 1,396,390	$ 1,377,302	$ -	$ 18,437	$ 650	$ 650
2	$ 720,831	$ 28,314	$ 466,488	$ 1,215,634	$ 1,195,993	$ -	$ 18,991	$ 650	$ 1,301
3	$ 737,118	$ 29,164	$ -	$ 766,282	$ 746,071	$ -	$ 19,560	$ 650	$ 1,951
4	$ 753,774	$ 30,038	$ -	$ 783,812	$ 783,162	$ -	$ -	$ 650	$ 2,602
5	$ 770,806	$ 30,940	$ -	$ 801,746	$ 801,095	$ -	$ -	$ 650	$ 3,252
6	$ 788,224	$ 31,868	$ -	$ 820,092	$ 819,442	$ -	$ -	$ 650	$ 3,903
7	$ 806,037	$ 32,824	$ -	$ 838,861	$ 838,210	$ -	$ -	$ 650	$ 4,553
8	$ 824,252	$ 33,809	$ -	$ 858,061	$ 857,410	$ -	$ -	$ 650	$ 5,203
9	$ 842,880	$ 34,823	$ -	$ 877,703	$ 877,052	$ -	$ -	$ 650	$ 5,854
10	$ 861,929	$ 35,867	$ -	$ 897,797	$ 897,147	$ -	$ -	$ 650	$ 6,504
11	$ 881,410	$ 36,944	$ -	$ 918,354	$ 917,703	$ -	$ -	$ 650	$ 7,155
12	$ 901,332	$ 38,052	$ -	$ 939,384	$ 938,733	$ -	$ -	$ 650	$ 7,805
13	$ 921,705	$ 39,193	$ -	$ 960,898	$ 960,248	$ -	$ -	$ 650	$ 8,456
14	$ 942,539	$ 40,369	$ -	$ 982,908	$ 982,258	$ -	$ -	$ 650	$ 9,106
15	$ 963,844	$ 41,580	$ -	$ 1,005,425	$ 1,004,774	$ -	$ -	$ 650	$ 9,756
Totals	$ 12,421,587	$ 511,274	$ 1,130,485	$ 14,063,345	$ 13,996,600	$ -	$ 56,988	$ 9,756	

NOTES:
(1) Includes: Hard costs and project service fees defined in ESCO's PROPOSED "FORM V"
(2) No payments are made by the Board of Education during the construction period.
(3) This figure should equal the value indicated on the ESCO's PROPOSED "FORM V". DO NOT include in the Financed Project Costs.
(4) Total financed amount includes 7% fee for separately contracted District A/E valued at $716,482.

"Page content is subject to Confidentiality Restrictions"

Project Savings Summary

Ecm #	ECM Name	Annual kW	Total kWh	Natural Gas (therms)	Energy Savings	O&M Savings	Total Project Savings	Total Project Costs	SPB
1	Lighting System Improvements	8,476	2,210,243	(31,542)	$ 257,782	$ 26,689	$ 284,470	$ 3,027,412	10.64
2	Lighting Controls	-	454,743	(6,497)	$ 46,843	$ -	$ 46,843	$ 558,428	11.92
3	Exterior Lighting	-	222,899	-	$ 25,653	$ -	$ 25,653	$ 380,859	14.85
4	Integrated and New Energy Management System	-	634,653	211,578	$ 241,333	$ -	$ 241,333	$ 2,752,323	11.40
5	Steam Trap Replacements	-	-	14,782	$ 12,090	$ -	$ 12,090	$ 102,200	8.45
6	Pipe &Tank Insulations	-	-	1,827	$ 1,504	$ -	$ 1,504	$ 23,959	15.93
7	Building Envelope Improvements	-	3,597	31,406	$ 25,605	$ -	$ 25,605	$ 273,328	10.67
8	Vending Machine Controls	-	42,643	(745)	$ 4,197	$ -	$ 4,197	$ 10,804	2.57
9	Premium Efficiency Motors	98	37,836	-	$ 4,384	$ -	$ 4,384	$ 48,972	11.17
10	Walk-in Freezer/Cooler Controllers	-	38,504	-	$ 4,282	$ -	$ 4,282	$ 12,638	2.95
11	High Efficiency Transformers	212	165,197	-	$ 20,224	$ -	$ 20,224	$ 222,936	11.02
12	Replace Boilers	-	-	22,998	$ 18,840	$ -	$ 18,840	$ 2,628,121	139.49
13	Destratification Fans	(19)	(3,971)	13,671	$ 10,388	$ -	$ 10,388	$ 87,750	8.45
14	Variable Frequency Drives	-	15,505	-	$ 1,572	$ -	$ 1,572	$ 35,849	22.81
15	Computer Load Management	-	144,772	(2,288)	$ 14,635	$ -	$ 14,635	$ 69,882	4.77
		8,767	**3,966,620**	**255,190**	**$ 689,330**	**$ 26,689**	**$ 716,019**	**$ 10,235,462**	**14.29**

"Page content is subject to Confidentiality Restrictions"

Section E:
Implementation Schedule

Ameresco's projected schedule for completion of the tasks associated with this performance contract is presented on the following page. This preliminary schedule is subject to revision based on actual contract execution date and changes in project timing. Naturally, all scheduling will be coordinated with the District personnel to ensure that no work will interfere with normal District operations.

This preliminary schedule represents a roll-up of major project activities from execution of the Energy services Agreement, through completion of improvements and the District's acceptance, to commencement of performance period services. Please find attached Ameresco's project schedule for completion of the project.

"Page content is subject to Confidentiality Restrictions"

This page is intentionally left blank.

Wayne Township Schools ESIP Project Schedule

ID	Task Name	Duration	Start	Finish
0	**Wayne NJ ESIP Schedule Rev**	**562 days**	**Thu 10/17/13**	**Fri 12/11/15**
1	Energy Services Agreement presented to Full Board for consideration	5 wks	Thu 10/17/13	Wed 11/20/13
2	Projected Costs & Savings verified by Independent 3rd party	5 wks	Fri 10/18/13	Thu 11/21/13
3	PWS - Full Board Meeting	1 day	Thu 11/7/13	Thu 11/7/13
4	Energy Services Agreement between Ameresco and Wayne BOE is executed	1 day	Thu 11/21/13	Thu 11/21/13
5	Arrange Project Financing	5 wks	Fri 11/22/13	Thu 12/26/13
6	NJ BPU Pay for Performance (P4P) Energy Rebate Program. Energy Reduction Plan (ERP) Submissions and Approvals	10 wks	Fri 11/22/13	Thu 1/30/14
7	Development of Design Engineering Plans & Specs. Project Applications to NJDOE (Parette Somjen)	14 wks	Fri 11/22/13	Thu 2/27/14
8	Ameresco Develops NJ Public Bid Packages for the Energy Conservation Measures (ECM)	4 wks	Fri 2/28/14	Thu 3/27/14
9	Ameresco advertises and solicits the ECM Bid Packages	12 wks	Fri 3/28/14	Thu 6/19/14
10	Commencement of Construction	18 mons	Fri 6/20/14	Thu 11/5/15
11	Post Construction Commissioning and Measurement & Verification	4 wks	Fri 11/6/15	Thu 12/3/15
12	Training of District Personnel	1 wk	Fri 12/4/15	Thu 12/10/15
13	Commencement of Normal Operations	1 day	Fri 12/11/15	Fri 12/11/15

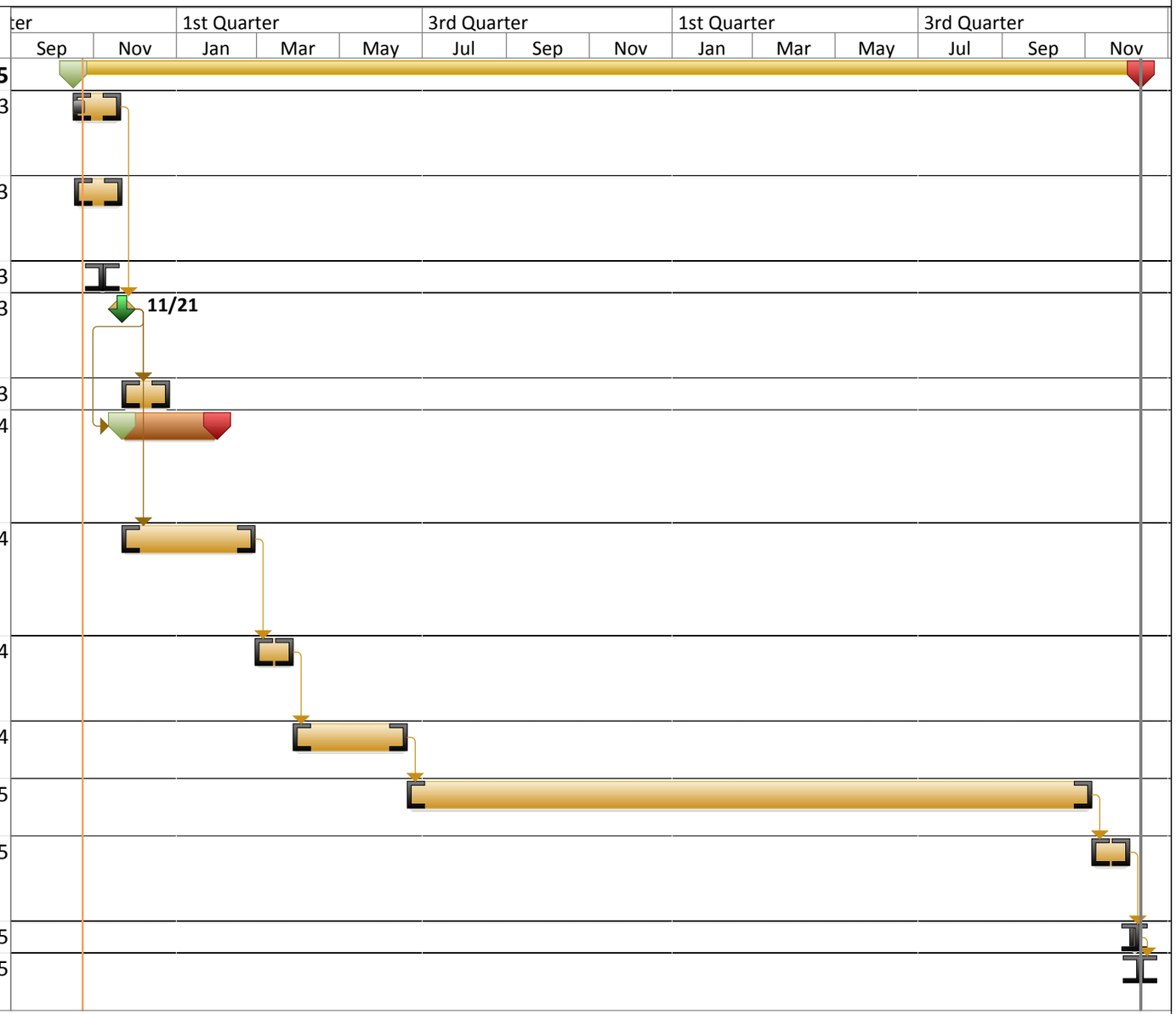

Ameresco, Inc.
50 Front Street
Newburgh, NY 12550

CONTACTS:

Ameresco Inc.

50 Front Street,

Newburgh, NY 12550

T: (845) 561.2260

Name of contact person in the firm:

Richard E. Kohrs, CPA, Senior Account Executive

T: 845.561.2260 • F: 845.561.2261

E: rkohrs@ameresco.com

ameresco.com

AMERESCO
Green • Clean • Sustainable

©2013 Ameresco Inc. Ameresco, the Ameresco logo, the orb symbol and the tagline “Green. Clean. Sustainable.” Are registered in the U.S. Patent and trademark Office. All rights reserved.

CEA-5180-00-0-/10-13-00.7